Technical Information
danfoss.com

H1P 089/100
Axial Piston Single Pumps

Revision history

Table of revisions

Date	Changed	Rev
September 2026	Corrected mislabeled control information	1503
August 2025	Corrected table label	1502
June 2025	Added HLC control option	1501
July 2022	Corrected unit conversions	1402
May 2022	Corrected HDC control information	1401
December 2021	Added HDC control	1301
April 2021	Corrected interface with ECU (EDC) graphic	1208
January 2021	Corrected unit conversion errors	1207
June 2020	Corrected E/F charge filtration port size	1206
April 2020	Corrected swash plate angle sensor connector and CCO connector descriptions	1205
February 2020	Added NFPE options and changed document number from BC00000067	1204
September 2019	G3 Input shaft option added.	1102
June 2019	Major revision.	1101
May 2018	Angle sensor for EDC; FDC note added.	1001
June 2017	port size changes	0902
May 2017	NFPE gen. 3 changes.	0901
November 2015	Master Model Code changes.	0800
2010-2014	Various changes.	BA-GB
Aug 2009	First edition	AA

Technical Specifications

H1 Pumps General Specification....6
H1P 089/100 Technical Data....6
Operating Parameters....7
Fluid Specification....8
Mounting Flange Loads....8
Bearing Life and External Radial Shaft Loads....9
Charge pump....10
Charge Pump Selection....10
20/24 cm^3 Charge Pump – Flow and Power Curves....10

Master Model Code

Displacement, A—Rotation, B—Product Version, Z—Port Configuration....11
D—Controls....12
Electronic Displacement Controls....12
Fan Drive Controls....12
Forward-Neutral-Reverse (FNR) Controls....12
Non-Feedback Proportional Electric (NFPE) Controls....12
Hybrid Load Controls (HLC)....13
Automotive Controls....13
Manual Displacement Control....13
Hydraulic Displacement Control....13
F—Orifices, E—Displacement Limiters....14
G—Endcap....15
H—Mounting Flange, J—Input Shaft, K—Aux Pad....16
M, N—Overpressure Protection Settings....17
S—Charge Pump, T—Filtration, V—Charge Pressure Relief....18
W—Special Hardware, X—Paint, Y—Special Features....19

Control Options

Electrical Displacement Control (EDC)....20
EDC Operation....20
Control signal requirements....21
Control Solenoid Data....21
Pump Output Flow Direction....21
Connector....22
Control response....22
Response Time....22
Manual Displacement Control (MDC)....23
MDC operation....24
MDC shaft rotation....24
MDC Torque....25
Control response....25
Response time....25
Neutral start switch (NSS)....26
Connector....26
Case Gauge Port M14....26
Lever....26
Hydraulic Displacement Control (HDC)....27
HDC principle....27
HDC operation....27
Hydraulic signal pressure range....28
Pump output flow direction vs. control pressure....28
Control response....28
Response time, HDC 089/100....28
Forward-Neutral-Reverse Control (FNR)....29
FNR Solenoid Data....30
Single Pump Output Flow Direction....30
Connector....30
Control response....31
Response Time....31
Non feedback proportional electric control (NFPE)....32
Control Signal Requirements....32
Control Solenoid Data....33

Single Pump Output Flow Direction....33
Connector....33
Control response....34
Response Time....34
Hybrid Load Control (HLC)....35
HLC Operation....35
Control mode actuation, EDC vs. NFPE....36
HLC Control signal requirements....36
HLC Single Pump Output Flow Direction....37
Connector....37
Control response....38
HLC Response Time....38
Automotive Control (AC)....39
Mode types....39
Basic functions....39
Performance functions....40
Protection and safety functions....40
Engine control and protection....40
Installation features....40
Fan Drive Control (FDC)....41
Control Signal Requirements....42
Control Solenoid Data....42
Single Pump Output Flow Direction....43
Connector....43
Control response....43
Response Time....43
Manual Override (MOR)....44
Swashplate angle sensor for EDC controls....45
Swash plate angle sensor parameters (EDC)....45
Swashplate Angle Sensor Connector....46
Interface with ECU (EDC)....46
Swash Plate Angle Sensor for NFPE and AC2 Controls....47
Swash Plate Angle Characteristic....47
Swash Plate Angle Sensor Parameters (NFPE/AC)....47
Swash Plate Angle Sensor Connector (NFPE)....48
Interface with ECU (NFPE)....49
Control Cut Off Valve (CCO)....49
Brake gauge port with MDC....50
CCO Connector (MDC)....51
H1P CCO Connector (EDC, NFPE)....51
CCO solenoid data....51
Displacement Limiter....52
H1P 089/100 Displacement Change (approximately)....52

Dimensions and Data

H1P 089/100 Input Shaft Option G1 (SAE C, 14 teeth)....53
H1P Input Shaft Option G3 (SAE C, 13 teeth)....54
H1P 089/100 Input Shaft Option G9 (SAE C-C, 23 teeth)....55
H1P 089/100 Input Shaft Option F1 (SAE C, 21 teeth)....56
H1P 089/100 Input Shaft Option F4, Code 38–3....57
Tapered shaft customer acknowledgement....57
H1P Auxiliary Mounting, Option H1, A2 (SAE A, 11 teeth)....58
H1P Auxiliary Mounting, Option H2, A2 (SAE A, 9 teeth)....59
H1P Auxiliary Mounting, Option H3, A3 (SAE B, 13 teeth)....60
H1P Auxiliary Mounting, Option H5, A4 (SAE B-B, 15 teeth)....61
H1P Auxiliary Mounting, Option H6, A5 (SAE C, 14 teeth)....62
H1P 089/100 Auxiliary Mounting, Option S1 (SAE B-B, 14 teeth)....63
H1P Displacement Limiter, Option B....64
Single Pump Ports....65
H1P Dimensions....66
Controls....69
EDC Options A2 and A3 (12/24 V)....69
EDC with MOR, Options A4 and A5 (12/24 V)....70
EDC with CCO (key C), Options E7 and E8 (12/24 V)....71

EDC with ASNSR, Options: H2 and H3 (12/24 V)....72
EDC with MOR and ASNSR, Options H6 and H7 (12/24 V)....73
EDC with CCO and ASNSR, Options H8 and H9 (12/24 V)....74
MDC Option: M1....75
MDC with Neutral Start Switch Option: M2....76
MDC with CCO, Options: M3, M4....77
MDC with NSS and CCO Options: M5, M6....78
HDC, Options: T1, T2....79
NFPE with MOR, CCO, ASNSR, Options: N3, N4 (12/24 V)....80
NFPE with MOR and ASNSR, Options: N5, N6 (12/24 V)....81
NFPE with MOR and CCO, Options: N7, N8 (12/24 V)....82
NFPE with MOR, Options: N1, N2 (12/24 V)....83
HLC Options V1 and V2 (12/24 V)....84
HLC with ASNSR, Options: V3 and V4 (12/24 V)....85
FDC Options: F1, F2 (12/24V)....86
Automotive control (AC)....87
AC connectors dimensions....88
Filtration....89
Suction Filtration Option L....89
Remote Full Flow Charge Pressure Filtration Option P....90
Integral Full Flow Charge Pressure Filtration, Option M....91
External Full Flow Charge Pressure Filtration, Option S....92

Technical Specifications

H1 Pumps General Specification

Axial piston closed circuit variable displacement pumps of cradle swash-plate design with clockwise or counterclockwise direction of rotation.

Pipe connections

- Main pressure ports: ISO split flange boss
- Remaining ports: SAE straight thread O-ring boss

Recommended installation position

Pump installation position is discretionary, however the recommended control position is on the top or at the side with the top position preferred. If the pump is installed with the control at the bottom, flushing flow must be provided through port M14 located on the EDC, FNR and NFPE control.

Vertical input shaft installation is acceptable. If input shaft is at the top, 1 bar case pressure must be maintained during operation. The housing must always be filled with hydraulic fluid. Recommended mounting for a multiple pump stack is to arrange the highest power flow towards the input source. Consult Danfoss for nonconformance to these guidelines.

Auxiliary cavity pressure

Auxiliary cavity pressure will be inlet pressure with internal charge pump or case pressure with external charge supply. For reference see Operating Parameters. Please verify mating pump shaft seal capability.

H1P 089/100 Technical Data

Feature	Size 089	Size 100	Size
Displacement	89.2 cm^3 [5.44 in^3]	101.7 cm^3 [6.21 in^3]	xx.x cm^3 [x.xx in^3]
Flow at rated speed	294 l/min [77.7 US gal/min]	335 l/min [88.5 US gal/min]	xxx l/min [xx.x US gal/min]
Torque at maximum displacement (theoretical)	1.42 N•m/bar [870 lbf•in/1000 psi]	1.62 N•m/bar [990 lbf•in/1000 psi]	x.xx N•m/bar [xxx lbf•in/1000 psi]
Mass moment of inertia of rotating components	0.0116 kg•m^2 [0.0086 slug•ft^2]	0.0116 kg•m^2 [0.0086 slug•ft^2]	x.xxxx kg•m^2 [x.xxxx slug•ft^2]
Mass (dry–no charge pump)	62 kg [137 lb]	62 kg [137 lb]	62 kg [137 lb]
Oil volume	2.6 l [0.67 US gal]	2.6 l [0.67 US gal]	2.6 l [0.67 US gal]

Shaft, flange and ports description

Input shaft per ISO 3019-1 (outer diameter)	• Outer Ø32 mm – 4 (SAE C, 14 teeth) • Outer Ø35 mm – 4 (SAE C, 21 teeth) • Outer Ø38 mm – 4 (SAE C-C, 23 teeth) • Conical keyed shaft end similar to ISO 3019-1 code 38-3, taper 1:8
Mounting flange per ISO 3019-1	Flange 127-4 (SAE C)
Auxiliary mounting flange with metric fasteners, with shaft outer diameter	• Flange 82-2 (SAE A: 9 teeth and 11 teeth) • Flange 101-2 (SAE B, 13 teeth and SAE B-B, 15 teeth) • Flange 127-4 (SAE C, 14 teeth)
Suction port per ISO 3019-1	ISO 11926-1 – 1 5⁄8 -12 (SAE O-ring boss)
Main configuration port	Ø25.4 mm; M12 x 1.75; 20 min. full thread depth
Case drain ports L2, L4 per ISO 3019-1	ISO 11926-1 – $1^5/_{16}$–12
Other ports	SAE O-ring boss
Customer interface threads	Metric fasteners

Operating Parameters

Parameter		Unit	Size 089	Size 100
Input speed	**Min. for internal[1] and external[2] charge supply**	min^{-1} (rpm)	500	500
	Min. for full performance, internal charge supply		1200	1250
	Rated		3300	3300
	Maximum		3800	3800
System pressure	**Maximum working**	bar [psi]	450 [6528]	450 [6528]
	Maximum		480 [6960]	480 [6960]
	Max./Min. low loop		45/10 [650/145]	
Charge pressure	**Minimum**	bar [psi]	18 [261]	
	Maximum		34 [493]	
Control pressure	**Minimum (at corner power for EDC, MDC, FNR)**		17 [247]	
	Minimum (at corner power for NFPE, FDC, AC)		25 [363]	
	Maximum		40 [580]	
Charge pump inlet pressure	**Rated**	bar (absolute) [in Hg vacuum]	0.7 [9.0]	
	Minimum (cold start)		0.2 [24.0]	
	Maximum	bar [psi]	4.0 [58.0]	
Case pressure	**Rated**		3.0 [44.0]	
	Maximum		5.0 [73.0]	
Lip seal maximum pressure (external)			0.4 [5.8]	

[1] Performance (displacement and pressure) may be limited due to limited control pressure.

[2] Full performance (displacement and pressure) possible at minimum charge and control pressure supply.

Filtration, cleanliness level and β_x-ratio (recommended minimum)

Cleanliness per ISO 4406	22/18/13
Efficiency β_x (charge pressure filtration)	$\beta_{15\text{-}20} = 75$ ($\beta_{10} \geq 10$)
Efficiency β_x (suction and return line filtration)	$\beta_{35\text{-}45} = 75$ ($\beta_{10} \geq 2$)
Recommended inlet screen mesh size	100 – 125 µm

Fluid Specification

Viscosity

Intermittent[1)]	5 mm^2/s [42 SUS]
Minimum	7 mm^2/s [49 SUS]
Recommended range	12 – 80 mm^2/s [66 – 370 SUS]
Maximum	1600 mm^2/s [7500 SUS]

[1)] Intermittent = Short term t < 1 min per incident and not exceeding 2 % of duty cycle based load-life.

Temperature

Minimum [1)]	-40°C [-40°F]
Rated	104°C [220°F]
Recommended range[2)]	60 – 85°C [140 – 185°F]
Maximum Intermittent	115°C [240°F]

[1)] Cold start = Short term t > 3 min, p ≤ 50 bar [725 psi], n ≤ 1000 min-1 (rpm).

[2)] At the hottest point, normally case drain port.

Mounting Flange Loads

The Rated and Shock load moments apply for top or side orientation of control.

Mounting flange load with control on top

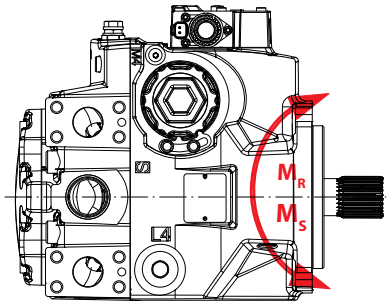

Rated moment	$\mathbf{M_R}$ = 5630 N•m [49 830 lbf•in]
Shock load moment	$\mathbf{M_S}$ = 12 190 N•m [107 900 lbf•in]

For more information, see *H1 Axial Piston Pumps, Basic Information*, **BC152886483968**, the section “Mounting flange loads”.

Bearing Life and External Radial Shaft Loads

All external shaft loads affect bearing life. The pumps are designed with bearings that can accept some external radial loads. The external radial shaft load limits are a function of the load position and orientation, and the operating conditions of the unit.

Danfoss recommends clamp-type couplings for applications with radial shaft loads. Contact your Danfoss representative for an evaluation of unit bearing life if you have continuously applied external loads exceeding 25 % of the maximum allowable radial load (R_e) or the pump swash-plate is positioned on one side of center all or most of the time.

Maximum external shaft load based on shaft deflection

External radial moment	Unit	Size 089/100
M_e	N•m [lbf•in]	118 [1044]

External radial shaft loads impact lifetime. For lifetime calculations please contact your Danfoss representative. In applications with external shaft loads, minimize the impact by positioning the load at 0° or 180° as shown below.

Radial load position

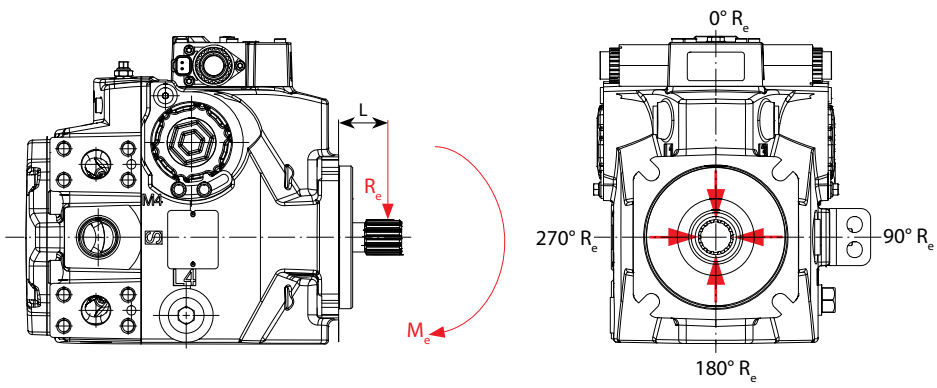

The maximum allowable radial shaft load (R_e) is based on the maximum external moment (M_e) and the distance (L) from the mounting flange to the load. It may be determined using the following formula:

$$R_e = \frac{M_e}{L}$$

Thrust loads should be avoided. Contact your Danfoss representative in the event thrust loads are anticipated.

Charge pump

Charge Pump Selection

In most applications a general guideline is that the charge pump displacement should be at least 10% of the total displacement of all components in the system. Unusual application conditions may require a more detailed review of charge flow requirements. System features and conditions which may invalidate the 10% guideline include (but are not limited to):

- Continuous operation at low input speeds < 1500 min^{-1} (rpm)
- High shock loading and/or long loop lines
- High flushing flow requirements
- Multiple low speed high torque motors
- High input shaft speeds

Contact your Danfoss representative for application assistance if your application includes any of these conditions.

Note

For more information, see *Selection of Drive line Components*, **BC157786484430**.

20/24 cm^3 Charge Pump – Flow and Power Curves

Charge pump flow and power requirements curves shown below at the following conditions:

Charge pressure = 20 bar [290 psi]
Viscosity = 11 mm^2/s [63 SUS]
Temperature = 80°C [176°F]

Charge pump flow

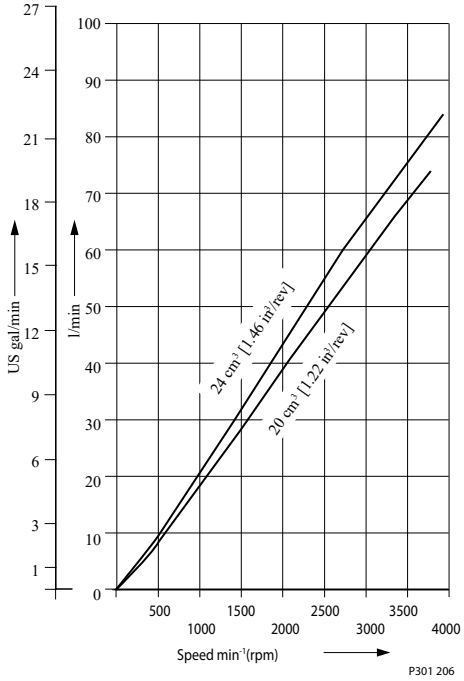

Charge pump power requirements

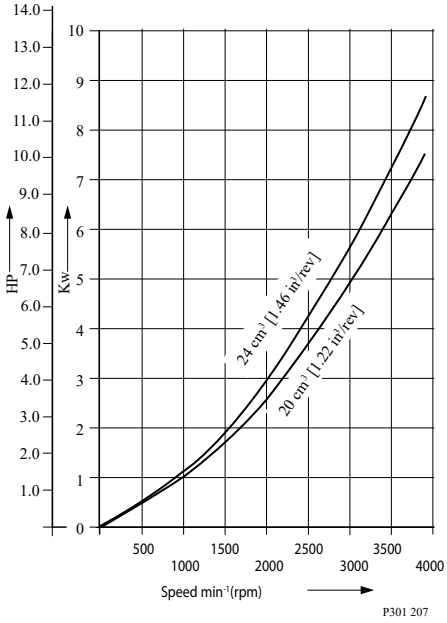

Master Model Code

Displacement, A—Rotation, B—Product Version, Z—Port Configuration

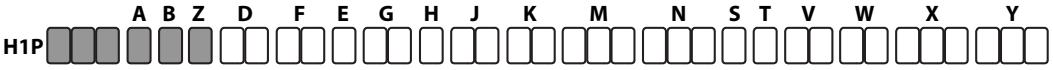

Displacement

089	89.2 cm^3 [5.44 in^3]
100	101.7 cm^3 [6.21 in^3]

A – Direction of Rotation

L	Left hand (counter clockwise)
R	Right hand (clockwise)

B – Product version

B	Revision code

Z – Port configuration

A	Inch, Customer O-ring port sealing according to ISO 11926-1

D—Controls

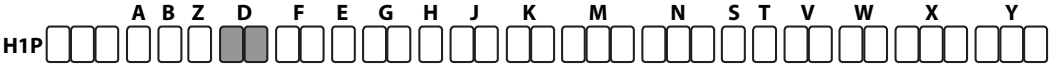

Electronic Displacement Controls

Code	Control type	Voltage	MOR	CCO with key C	Angle sensor	Connector
A2	EDC	12 V	—	—	—	DEUTSCH
A3	EDC	24 V	—	—	—	DEUTSCH
A4	EDC	12 V	●	—	—	DEUTSCH
A5	EDC	24 V	●	—	—	DEUTSCH
E7	EDC	12 V	—	●	—	DEUTSCH
E8	EDC	24 V	—	●	—	DEUTSCH
H2	EDC	12 V	—	—	●	DEUTSCH
H3	EDC	24 V	—	—	●	DEUTSCH
H6	EDC	12 V	●	—	●	DEUTSCH
H7	EDC	24 V	●	—	●	DEUTSCH
H8	EDC	12 V	—	●	●	DEUTSCH
H9	EDC	24 V	—	●	●	DEUTSCH

● – To be used for the control; — Not to be used for the control

Fan Drive Controls

F1	FDC	12 V	DEUTSCH Connector
F2	FDC	24 V	DEUTSCH Connector

Align with options: **F:** Orifices, **E:** Displacement limiters, **M, N:** Overpressure protection, and **W:** Special hardware.

Forward-Neutral-Reverse (FNR) Controls

A9	FNR	12 V	with MOR	DEUTSCH Connector
B1	FNR	24 V	with MOR	DEUTSCH Connector

Non-Feedback Proportional Electric (NFPE) Controls

Code	Control type	Voltage	MOR	CCO with key C	Angle sensor	Connector
N1	NFPE	12 V	●	—	—	DEUTSCH
N2	NFPE	24 V	●	—	—	DEUTSCH
N3	NFPE	12 V	●	●	●	DEUTSCH
N4	NFPE	24 V	●	●	●	DEUTSCH
N5	NFPE	12 V	●	—	●	DEUTSCH
N6	NFPE	24 V	●	—	●	DEUTSCH
N7	NFPE	12 V	●	●	—	DEUTSCH
N8	NFPE	24 V	●	●	—	DEUTSCH

Align with options: **E:** Displacement limiters and **W:** Special hardware.

Hybrid Load Controls (HLC)

Hybrid Load Controls (HLC)

Code	Control type	Voltage	MOR	CCO with key C	Angle sensor	Connector
V1	HLC	12 V	—	—	—	DEUTSCH
V2	HLC	24 V	—	—	—	DEUTSCH
V3	HLC	12 V	—	—	●	DEUTSCH
V4	HLC	24 V	—	—	●	DEUTSCH

Automotive Controls

Automotive Control (AC)

Code	AC type	Voltage	MOR	Speed sensor	Wire harness	Angle sensor	Connector
P6	AC–1	12 V	●	●	●	—	DEUTSCH
P7	AC–1	24 V	●	●	●	—	DEUTSCH
P8	AC–2	12 V	●	●	●	●	DEUTSCH
P9	AC–2	24 V	●	●	●	●	DEUTSCH
P5	AC–1	12 V	●	—	—	—	DEUTSCH
R3	AC–1	24 V	●	—	—	—	DEUTSCH
R4	AC–2	12 V	●	—	—	●	DEUTSCH
R5	AC–2	24 V	●	—	—	●	DEUTSCH

● – To be used for the control; — Not to be used for the control

Manual Displacement Control

Manual Displacement Control (MDC)

Code	Control type	CCO Voltage	CCO	Neutral Start Switch	Connector
M1	MDC	—	—	—	—
M2	MDC	—	—	●	DEUTSCH
M3	MDC	12 V	●	—	DEUTSCH
M4	MDC	24 V	●	—	DEUTSCH
M5	MDC	12 V	●	●	DEUTSCH
M6	MDC	24 V	●	●	DEUTSCH

Align with options **F:** Orifices and **Y:** Settings for adjustment (if applicable).

Hydraulic Displacement Control

Hydraulic Displacement Control (HDC)

Code	Pressure range	Ports
T1	4.2 - 16.2 bar	Inch ports 9/16-18
T2	3.0 - 11.6 bar	Inch ports 9/16-18

F—Orifices, E—Displacement Limiters

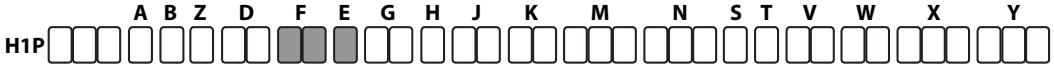

F – Orifices Options

Orifices options related to control type

Code	Tank (A+B)	P orifice	A/B orifices	EDC, FNR, HDC	MDC	NFPE, AC	FDC
C3	No orifice			●	●	–	–
C1	–	–	0.8 mm	●	●	●	–
C2	–	–	1.3 mm	●	●	●	●
C4	–	–	1.8 mm	●	●	●	–
C6	1.0 mm	–	–	–	●	–	
C7	1.3 mm	–	–	–	●	–	–
D1	0.8 mm	1.0 mm	–	–	●	–	–
D2	0.8 mm	1.3 mm	–	–	●	–	–
D3	1.0 mm	1.3 mm	–	–	●	–	–
D4	1.0 mm	1.3 mm	1.3 mm	–	●	–	–
D5	0.6 mm	0.6 mm	0.8 mm	–	●	–	–
D6	1.3 mm	1.3 mm	–	–	●	–	–
D7	–	–	3.0 mm	–	–	●	–

E – Displacement Limiter Options

N	None
B	Adjustable externally
C	No limiters, with nested springs, required for NFPE, AC, FDC*
D	Adjustable externally with nested springs, required for NFPE, AC, FDC*

* Align with option **Y:** Settings for adjustment (if applicable).

G—Endcap

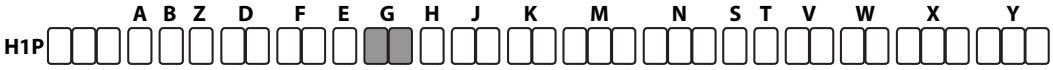

G – End-cap Options

Twin port, ISO 6162 split flange ports; Align with T: Filtration

D3	Integral pressure filtration
D6	Suction filtration
D8	Remote filtration or external charge supply

H—Mounting Flange, J—Input Shaft, K—Aux Pad

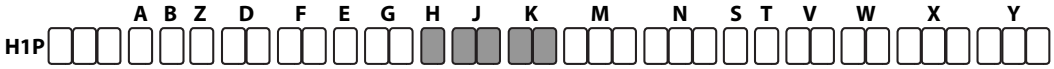

H – Mounting options

Mounting to be aligned with option W: Special hardware

H	ISO 3019-1 flange 127–4 (SAE C)
K	ISO 3019-1 flange 127–4 (SAE C), 4-bolt, with speed sensor

J – Input Shaft options

G1	ISO 3019-1, outer Ø32 mm - 4 (14 teeth splined shaft 12/24 pitch)
G3	ISO 3019-1, outer Ø44 mm - 4 (13 teeth splined shaft 8/16 pitch)
G9	ISO 3019-1, outer Ø38 mm - 4 (23 teeth splined shaft 16/32 pitch
F1	ISO 3019-1, outer Ø35 mm - 4 (21 teeth splined shaft 16/32 pitch)
F4	Conical keyed shaft end, code 38-3 (similar to ISO 3019-1), taper 1:8 (key not supplied with pump)

K – Auxiliary Mounting Pad options for 26cc and 34cc options (ISO 3019-1)

Mounting to be aligned with option S: Charge pump options

NN	None
H1	Flange 82–2 (SAE A, 11 teeth, 16/32 coupling); shipping cover
H2	Flange 82–2 (SAE A, 9 teeth, 16/32 coupling); shipping cover
H3	Flange 101–2 (SAE B, 13 teeth, 16/32 coupling); shipping cover
H5	Flange 101–2 (SAE B-B, 15 teeth, 16/32 coupling); shipping cover
H6	Flange 127–4 (SAE C, 14 teeth, 12/24 coupling); shipping cover

K – Auxiliary Mounting Pad options for 40cc option (ISO 3019-1)

Mounting to be aligned with option S: Charge pump options

AN	None for 40cc charge pump
A1	Flange 82–2 (SAE A, 9 teeth, 16/32 coupling); shipping cover
A2	Flange 82–2 (SAE A, 11 teeth, 16/32 coupling); shipping cover
A3	Flange 101–2 (SAE B, 13 teeth, 16/32 coupling); shipping cover
A4	Flange 101–2 (SAE B-B, 15 teeth, 16/32 coupling); shipping cover
A5	Flange 127–4 (SAE C, 14 teeth, 12/24 coupling); shipping cover

M, N—Overpressure Protection Settings

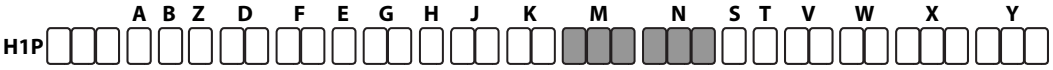

M and N – Overpressure protection options

L	Pressure limiter setting	HPRV with bypass setting[1)]
L15	150 bar [2176 psi]	200 bar [2900 psi]
L18	180 bar [2610 psi]	230 bar [3336 psi]
L20	200 bar [2900 psi]	250 bar [3630 psi]
L23	230 bar [3336 psi]	280 bar [4061 psi]
L25	250 bar [3630 psi]	300 bar [4350 psi]
L28	280 bar [4061 psi]	330 bar [4786 psi]
L30	300 bar [4350 psi]	350 bar [5076 psi]
L33	330 bar [4786 psi]	380 bar [5510 psi]
L35	350 bar [5080 psi]	400 bar [5800 psi]
L38	380 bar [5510 psi]	420 bar [6090 psi]
L40	400 bar [5800 psi]	450 bar [6526 psi]
L42	420 bar [6090 psi]	450 bar [6526 psi]
L43	430 bar [6237 psi]	480 bar [6962 psi]
L44	440 bar [6382 psi]	480 bar [6962 psi]
L45	450 bar [6526 psi]	480 bar [6962 psi]
Overpressure protection type and setting for FDC		
F01	150 bar [2175 psi]	250 bar [3630 psi]
F02	150 bar [2175 psi]	300 bar [4350 psi]
F03	150 bar [2175 psi]	350 bar [5076 psi]

[1)] Pressure limiter and HPRV with bypass, over-pressure protection type must be the same for both sides “A” and “B”.

K	Pressure setting [1)]
K18	180 bar [2610 psi]
K20	200 bar [2900 psi]
K23	230 bar [3336 psi]
K25	250 bar [3630 psi]
K28	280 bar [4061 psi]
K30	300 bar [4350 psi]
K33	330 bar [4786 psi]
K35	350 bar [5076 psi]
K38	380 bar [5510 psi]
K40	400 bar [5800 psi]
K42	420 bar [6090 psi]
K45	450 bar [6526 psi]

[1)] Pressure limiter and HPRV with bypass, over-pressure protection type must be the same for both sides “A” and “B”.

Note

Please contact Danfoss Power Solutions for pressures not shown or for applied pressure above max. working pressure.

S—Charge Pump, T—Filtration, V—Charge Pressure Relief

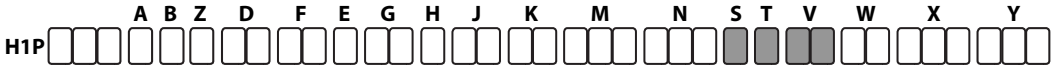

S – Charge pump options

Charge pump to be aligned with option K: auxiliary mounting pad options

D	20 cm^3/rev [1.22 in^3/rev]
M	24 cm^3/rev [1.46 in^3/rev]
N	No charge pump, external charge supply (*Align with options:* **E, T**)

T – Filtration options

Filtration to be aligned with G: End cap selection

L	Suction filtration
M	Integral full charge flow filtration with bypass sensor, medium filter length, 11004918
N	Integral full charge flow filtration with bypass sensor, without filter
P	Remote full charge flow filtration
E	External full charge flow filtration (Align with options **N, S**)

V – Charge pressure relief valve (CPRV) setting

20	20 bar [290 psi]
22	22 bar [319 psi]
24	24 bar [348 psi]
26	26 bar [377 psi]
28	28 bar [406 psi]
30	30 bar [435 psi]
32	32 bar [464 psi]
34	34 bar [493 psi]

Note

Options 18, 20, 22, and 24 are not to be used with NFPE, AC, or FDC controls.

W—Special Hardware, X—Paint, Y—Special Features

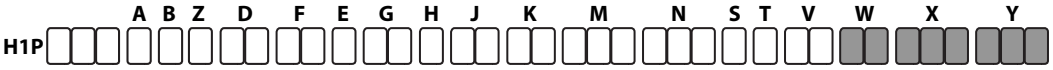

W – Special Hardware features

Hardware features to be aligned with options D, E

P1	NFPE/FDC valve plate
P2	NFPE/FDC/AC valve plate and speed ring on the cylinder block
P4	EDC/FNR/MDC valve plate and speed ring on the cylinder block
PN	EDC/FNR/MDC valve plate
H1	MDC/EDC/FNR valve plate with MDC handle

X – Paint and Name-tag

NNN	Black paint and Danfoss name-tag
C08	Paint none and Danfoss name-tag

Y – Special settings (SIL-2 non-certifiable, without customer files)

Code	CAN J1939	ECO fuel saving mode	Functional option	Cruise control	Control	AC type
D3E	in/out	●	E	–	N1 (12 V_{DC})	AC–1
D3F	in/out	–	F	–	N1 (12 V_{DC})	AC-1
D4E	in/out	●	E	–	N2 (24 V_{DC})	AC-1
D4F	in/out	–	F	–	N2 (24 V_{DC})	AC-1
D5F	in/out	–	F	–	P8 (12 V_{DC})	AC–2 (with swash plate angle sensor)
D5J	in/out	●	J	●	P8 (12 V_{DC})	AC–2 (with swash plate angle sensor)
D6F	in/out	–	F	–	P9 (24 V_{DC})	AC–2 (with swash plate angle sensor)
D6J	in/out	●	J	●	P9 (24 V_{DC})	AC–2 (with swash plate angle sensor)
M00	MDC handle standard position					
NNN	None					

● – To be used for the control; — Not to be used for the control

Control Options

Electrical Displacement Control (EDC)

An EDC is a displacement (flow) control. Pump swash plate position is proportional to the input command and therefore vehicle or load speed (excluding influence of efficiency), is dependent only on the prime mover speed or motor displacement.

The Electrical Displacement Control (**EDC**) consists of a pair of proportional solenoids on each side of a three-position, four-way porting spool. The proportional solenoid applies a force input to the spool, which ports hydraulic pressure to either side of a double acting servo piston. Differential pressure across the servo piston rotates the swash plate, changing the pump's displacement from full displacement in one direction to full displacement in the opposite direction.

A serviceable 170 µm screen is located in the supply line immediately before the control porting spool.

Note

Under some circumstances, such as contamination, the control spool could stick and cause the pump to stay at some displacement.

Electrical Displacement Control

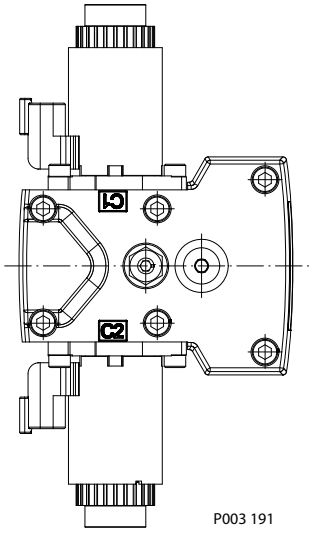

EDC schematic, feedback from swash plate

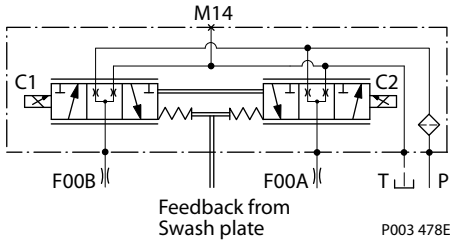

EDC Operation

H1P EDC's are current driven controls requiring a Pulse Width Modulated (PWM) signal. Pulse width modulation allows more precise control of current to the solenoids.

The PWM signal causes the solenoid pin to push against the porting spool, which pressurizes one end of the servo piston, while draining the other. Pressure differential across the servo piston moves the swashplate.

A swashplate feedback link, opposing control links, and a linear spring provide swashplate position force feedback to the solenoid. The control system reaches equilibrium when the position of the swashplate spring feedback force exactly balances the input command solenoid force from the operator. As hydraulic pressures in the operating loop change with load, the control assembly and servo/swashplate system work constantly to maintain the commanded position of the swashplate.

The EDC incorporates a positive neutral deadband as a result of the control spool porting, preloads from the servo piston assembly, and the linear control spring. Once the neutral threshold current is reached, the swashplate is positioned directly proportional to the control current. To minimize the effect of the control neutral deadband, we recommend the transmission controller or operator input device incorporate a jump up current to offset a portion of the neutral deadband.

The neutral position of the control spool does provide a positive preload pressure to each end of the servo piston assembly.

When the control input signal is either lost or removed, or if there is a loss of charge pressure, the spring-loaded servo piston will automatically return the pump to the neutral position.

Control signal requirements

Pump displacement vs. control current

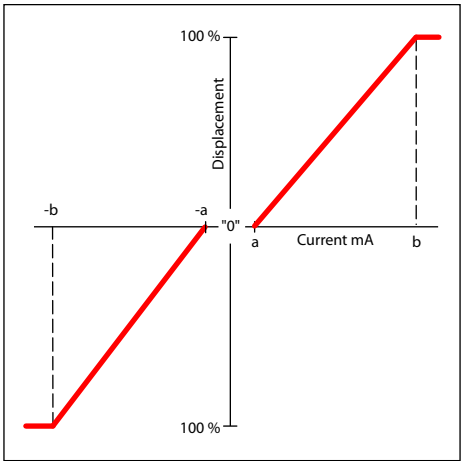

EDC control current

Voltage		12 V_{DC}	24 V_{DC}
Minimum current to stroke pump	**a***	640 mA	330 mA
	b	1640 mA	820 mA
Pin connections		any order	

* Factory test current, for vehicle movement or application actuation expect higher or lower value.

Control Solenoid Data

Description		12 V	24 V
Maximum current		1800 mA	920 mA
Nominal coil resistance	@ 20 °C [68 °F]	3.66 Ω	14.20 Ω
	@ 80 °C [176 °F]	4.52 Ω	17.52 Ω
Inductance		33 mH	140 mH
PWM signal frequency	Range	70 – 200 Hz	
	Recommended*	100 Hz	
IP Rating	IEC 60 529	IP 67	
	DIN 40 050, part 9	IP 69K with mating connector	
Connector color		Black	

* PWM signal required for optimum control performance.

Pump Output Flow Direction

Shaft rotation	Clock-Wise (CW)		Counter-Clock-Wise (CCW)	
Coil energized*	**C1**	**C2**	**C1**	**C2**
Port A	out	in	in	out
Port B	in	out	out	in
Servo port pressurized	M4	M5	M4	M5

* For coil location see installation drawings.

Connector

Connector DEUTSCH, 2-pin

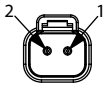

Description	Quantity	Order data
Mating connector	1	DEUTSCH DT06-2S
Wedge lock	1	DEUTSCH W2S
Socket contact (16–18 AWG)	2	DEUTSCH 0462-201-16141
Danfoss mating connector kit	1	K29657

Control response

H1P controls are available with optional control passage orifices to assist in matching the rate of swash-plate response to the application requirements.

The time required for the pump output flow to change from zero to full flow (acceleration) or full flow to zero (deceleration) is a net function of spool porting, orifices, and charge pressure.

A swash-plate response times table is available for each frame size. Testing should be conducted to verify the proper orifice selection for the desired response. Typical response times at the following conditions:

Δ p = 250 bar [3626 psi]
Charge pressure = 20 bar [290 psi]
Viscosity and temperature = 30 mm^2/s [141 SUS] and 50 °C [122 °F]
Speed = 1800 min^{-1} (rpm)

Response Time

Stroking direction	0.8 mm [0.03 in] orifice	1.3 mm [0.05 in] orifice	No orifice
Neutral to full flow	3.8 s	1.8 s	1.0 s
Full flow to neutral	2.2 s	1.0 s	0.6 s

Manual Displacement Control (MDC)

A Manual proportional Displacement Control (**MDC**) consists of a handle on top of a rotary input shaft. The shaft provides an eccentric connection to a feedback link. This link is connected on its one end with a porting spool. On its other end the link is connected the pumps swashplate.

This design provides a travel feedback without spring. When turning the shaft the spool moves thus providing hydraulic pressure to either side of a double acting servo piston of the pump.

Differential pressure across the servo piston rotates the swash plate, changing the pump's displacement. Simultaneously the swashplate movement is fed back to the control spool providing proportionality between shaft rotation on the control and swash-plate rotation. The MDC changes the pump displacement between no flow and full flow into opposite directions.

Under some circumstances, such as contamination, the control spool could stick and cause the pump to stay at some displacement.

For the MDC with CCO option the brake port (X7) provides charge pressure when the coil is energized to activate static function such as a brake release. The X7 port must not be used for any continuous oil consumption.

The MDC is sealed by means of a static O-ring between the actuation system and the control block. Its shaft is sealed by means of a special O-ring which is applied for low friction. The special O-ring is protected from dust, water and aggressive liquids or gases by means of a special lip seal.

Manual Displacement Control

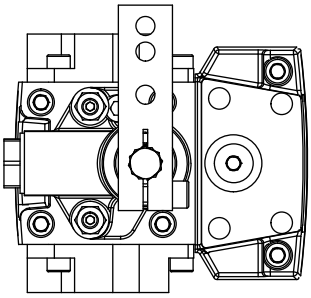

Pump displacement vs. control lever rotation

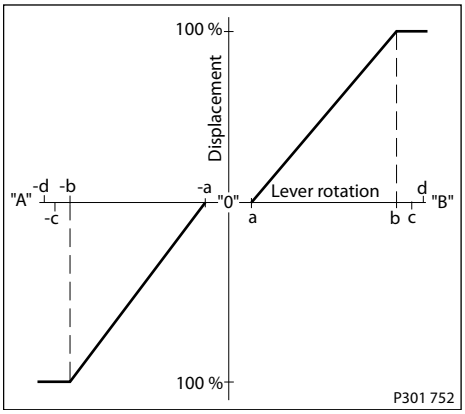

Deadband on **B** side: **a = 3° ±1°**
Maximum pump stroke: **b = 30° +2/-1°**
Required customer end stop: **c = 36° ±3°**
Internal end stop: **d = 40°**

MDC operation

The MDC provides a mechanical dead-band required to overcome the tolerances in the mechanical actuation. The MDC contains an internal end stop to prevent turning the handle into any inappropriate position.

The MDC provides a permanent restoring moment appropriate for turning the MDC input shaft back to neutral position only. This is required to take the backlash out of the mechanical connections between the Bowden cable and the control.

High case pressure may cause excessive wear and the NSS to indicate that the control is not in neutral position. In addition, if the case pressure exceeds 5 bar there is a risk of an insufficient restoring moment.
The MDC is designed for a maximum case pressure of 5 bar and a rated case pressure of 3 bar.

- Customers must install some support to limit the setting range of their Bowden cable to avoid an overload of the MDC.
- Customers can apply their own handle design but they must care about a robust clamping connection between their handle and the control shaft and avoid overload of the shaft.
- Customers can connect two MDC's on a tandem unit in such a way that the actuation force will be transferred from the pilot control to the second control. The kinematic of the linkages must ensure that either control shaft is protected from torque overload.

Caution

Using the internal spring force on the input shaft is not an appropriate way to return the customer connection linkage to neutral, or to force a Bowden cable or a joystick back to neutral position. It is not applicable for any limitation of the Bowden cable stroke, except the applied torque to the shaft will never exceed 20 N•m.

MDC shaft rotation

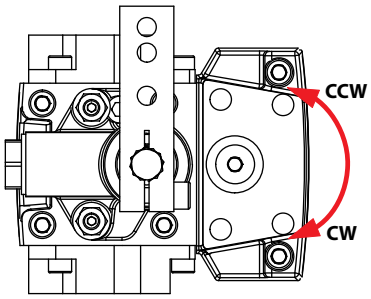

Pump shaft rotation*	Clockwise (CW)		Counter-clockwise (CCW)	
MDC shaft rotation	**CW**	**CCW**	**CW**	**CCW**
Port A	in (low)	out (high)	out (high)	in (low)
Port B	out (high)	in (low)	in (low)	out (high)
Servo port high pressure	M5	M4	M5	M4

* As seen from shaft side.

MDC Torque

Description	Value
Torque required to move handle to maximum displacement	1.4 N•m [12.39 lbf•in]
Torque required to hold handle at given displacement	0.6 N•m [5.31 lbf•in]
Maximum allowable input torque	20 N•m [177 lbf•in]

Caution

Volumetric efficiencies of the system will have impacts on the start and end input commands.

Control response

H1P controls are available with optional control passage orifices to assist in matching the rate of swash-plate response to the application requirements.

The time required for the pump output flow to change from zero to full flow (acceleration) or full flow to zero (deceleration) is a net function of spool porting, orifices, and charge pressure.

A swash-plate response times table is available for each frame size. Testing should be conducted to verify the proper orifice selection for the desired response. Typical response times at the following conditions:

Δ p = 250 bar [3626 psi]
Charge pressure = 20 bar [290 psi]
Viscosity and temperature = 30 mm^2/s [141 SUS] and 50 °C [122 °F]
Speed = 1800 min^{-1} (rpm)

Response time

Code	Orifice description (mm)			Stroking direction	
	Tank (A+B)	P	A/B	Neutral to full flow	Full flow to neutral
C3	No orifice			0.5 s	0.6 s
C6	1	–	–	1.7 s	1.5 s
C7	1.3	–	–	1.1 s	1.0 s
D1	0.8	1	–	3.1 s	2.4 s
D2	0.8	1.3	–	2.8 s	2.2 s
D3	1	1.3	–	2.0 s	1.6 s
D4	1	1.3	1.3	2.4 s	1.9 s

For further data please contact your Danfoss representative.

Neutral start switch (NSS)

The Neutral Start Switch **(NSS)** contains an electrical switch that provides a signal of whether the control is in neutral. The signal in neutral is Normally Closed **(NC)**.

Neutral start switch schematic

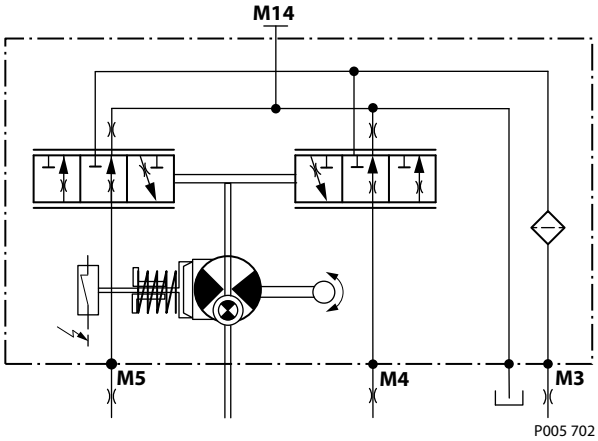

Neutral start switch data

Max. continuous current with switching	8.4 A
Max. continuous current without switching	20 A
Max. voltage	36 V_{DC}
Electrical protection class	IP67 / IP69K with mating connector

Connector

Connector DEUTSCH, 2-pin

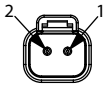

Description	Quantity	Order data
Mating connector	1	DEUTSCH DT06-2S
Wedge lock	1	DEUTSCH W2S
Socket contact (16–18 AWG)	2	DEUTSCH 0462-201-16141
Danfoss mating connector kit	1	K29657

Case Gauge Port M14

The drain port should be used when the control is mounted on the unit's bottom side to flush residual contamination out of the control.

Lever

MDC-controls are available with an integrated lever.

Hydraulic Displacement Control (HDC)

HDC principle

An HDC is a Hydraulic Displacement Control. Pump swashplate position is proportional to the input command and therefore vehicle speed or load speed (excluding influence of efficiency), is dependent only on the prime mover speed or motor displacement.

The HDC control uses a hydraulic input signal to operate a porting spool, which ports hydraulic pressure to either side of a double acting servo piston. The hydraulic signal applies a force input to the spool which ports hydraulic pressure to either side of a double acting servo piston. Differential pressure across the servo piston rotates the swashplate, changing the pump's displacement from full displacement in one direction to full displacement in the opposite direction. Under some circumstances, such as contamination, the porting spool could stick and cause the pump to stay at some displacement.

A serviceable 175 µm screen is located in the supply line immediately before the control porting spool.

HDC control

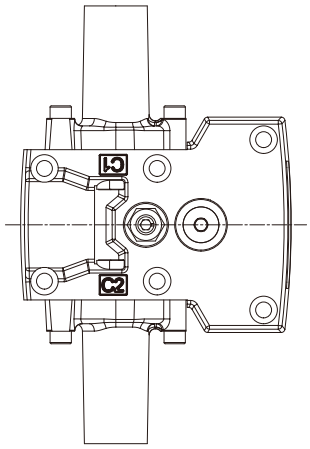

P400520

HDC schematic

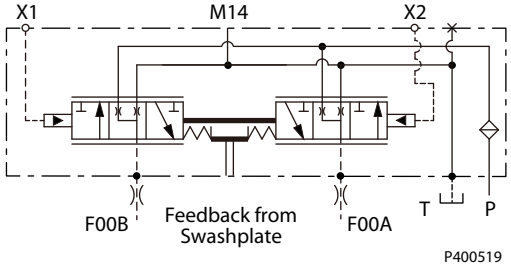

P400519

HDC operation

HDC's are hydraulically driven control which ports hydraulic pressure to either side of a porting spool, which pressurizes one end of the servo piston, while draining the other end to case. Pressure differential across the servo piston moves the swashplate.

A swashplate feedback link, opposing control linkage, and a linear spring provide swashplate position force feedback to the hydraulic pressure. As hydraulic pressures in the operating loop change with load, the control assembly and servo/swashplate system work constantly to maintain the commanded position of the swashplate.

The HDC incorporates a positive neutral dead band as a result of the control spool porting, preloads from the servo piston assembly, and the linear control spring. Once the neutral threshold point is reached, the swashplate is positioned directly proportional to the control pressure.

When the control input is either lost or removed, or if there is a loss of charge pressure, the spring loaded servo piston will automatically return the pump to the neutral position.

Pump displacement vs signal pressure

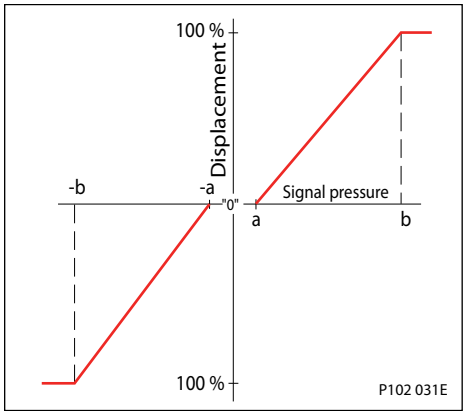

Hydraulic signal pressure range

Option	Type	a*	b*	Max. pressure
T1	Standard	4.2 bar	16.2 bar	30 bar
T2	Option	3 bar	11.6 bar	30 bar

* Factory test current, for vehicle movement or application actuation expect a higher or lower value.

Pump output flow direction vs. control pressure

Shaft rotation HDC	Clockwise (CW) seen from shaft		Counter Clockwise (CCW) seen from shaft	
Port energized	X1	X2	X1	X2
Port A	Out (high)	In (low)	In (low)	Out (high)
Port B	In (low)	Out (high)	Out (high)	In (low)
Servo port high pressure	M4	M5	M4	M5

For appropriate performance of HDC characteristic, keep the drain pressure of pilot valve to be equal or slightly higher than pump case pressure.

Control response

H1P controls are available with optional control passage orifices to assist in matching the rate of swash-plate response to the application requirements.

The time required for the pump output flow to change from zero to full flow (acceleration) or full flow to zero (deceleration) is a net function of spool porting, orifices, and charge pressure.

A swash-plate response times table is available for each frame size. Testing should be conducted to verify the proper orifice selection for the desired response. Typical response times at the following conditions:

Δ p = 250 bar [3626 psi]
Charge pressure = 20 bar [290 psi]
Viscosity and temperature = 30 mm^2/s [141 SUS] and 50 °C [122 °F]
Speed = 1800 min^{-1} (rpm)

Response time, HDC 089/100

Stroking direction	0.8 mm [0.03 in] orifice	1.3 mm [0.05 in] orifice	No orifice
Neutral to full flow	2.8s	1.3s	0.7s
Full flow to neutral	1.9s	0.9s	0.5s

Forward-Neutral-Reverse Control (FNR)

The 3-position FNR control options **A9** (12 V) and **B1** (24 V) uses an electric input signal to switch the pump to a full stroke position. A serviceable 125 µm screen is located in the supply line immediately before the control porting spool.

Note

Under some circumstances, such as contamination, the control spool can stick and cause the pump to stay at some displacement.

Forward-Neutral-Reverse electric control (FNR)

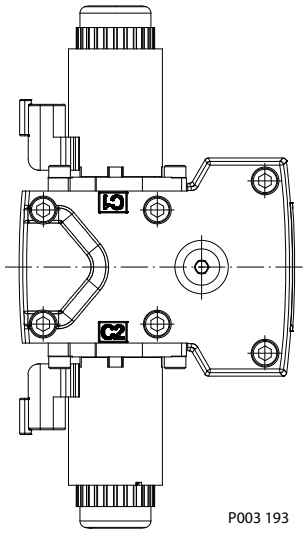

FNR hydraulic schematic

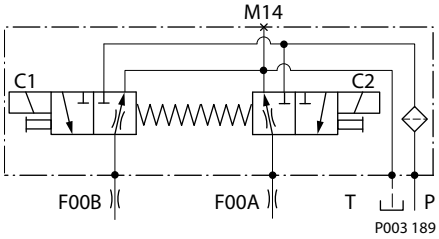

Pump displacement vs. electrical signal

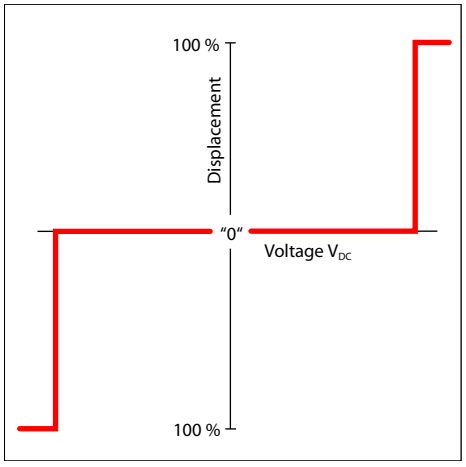

FNR control current

Voltage	12 V_{DC}	24 V_{DC}
Minimum current to stroke pump	750 mA	380 mA
Pin connections	any order	

FNR Solenoid Data

Solenoid data

Voltage	12 V_{DC}	24 V_{DC}
Minimum supply voltage	9.5 V_{DC}	19 V_{DC}
Maximum supply voltage (continuous)	14.6 V_{DC}	29 V_{DC}
Bi-directional diode cut off voltage	28 V_{DC}	53 V_{DC}
Maximum current	1050 mA	500 mA
Nominal coil resistance @ 20°C	8.4 Ω	34.5 Ω
PWM Range	70 – 200 Hz	
PWM Frequency (preferred)*	100 Hz	

* PWM signal required for optimum control performance.

Electrical Protection	Standard	Class
IP Rating	IEC 60 529	IP 67
	DIN 40 050, part 9	IP 69K with mating connector

Single Pump Output Flow Direction

Shaft rotation	Clock-Wise (CW)		Counter-Clock-Wise (CCW)	
Coil energized*	**C1**	**C2**	**C1**	**C2**
Port A	in	out	out	in
Port B	out	in	in	out
Servo port pressurized	M5	M4	M5	M4

* For coil location see installation drawings.

Connector

Connector DEUTSCH, 2-pin

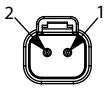

Description	Quantity	Order data
Mating connector	1	DEUTSCH DT06-2S
Wedge lock	1	DEUTSCH W2S
Socket contact (16–18 AWG)	2	DEUTSCH 0462-201-16141
Danfoss mating connector kit	1	K29657

Control response

H1P controls are available with optional control passage orifices to assist in matching the rate of swash-plate response to the application requirements.

The time required for the pump output flow to change from zero to full flow (acceleration) or full flow to zero (deceleration) is a net function of spool porting, orifices, and charge pressure.

A swash-plate response times table is available for each frame size. Testing should be conducted to verify the proper orifice selection for the desired response. Typical response times at the following conditions:

Δ p = 250 bar [3626 psi]
Charge pressure = 20 bar [290 psi]
Viscosity and temperature = 30 mm^2/s [141 SUS] and 50 °C [122 °F]
Speed = 1800 min^{-1} (rpm)

Response Time

Stroking direction	0.8 [0.03] orifice	1.3 [0.05] orifice	No orifice
Neutral to full flow	3.7 s	1.7 s	1.1 s
Full flow to neutral	3.0 s	1.3 s	0.6 s

Non feedback proportional electric control (NFPE)

The Non Feedback Proportional Electric (**NFPE**) control is an electrical automotive control in which an electrical input signal activates one of two proportional solenoids that port charge pressure to either side of the pump servo cylinder. The NFPE control has no mechanical feedback mechanism.

A serviceable 170 µm screen is located in the supply line immediately before the control porting spool.

Note

Under some circumstances, such as contamination, the control spool could stick and cause the pump to stay at some displacement.

NFPE control

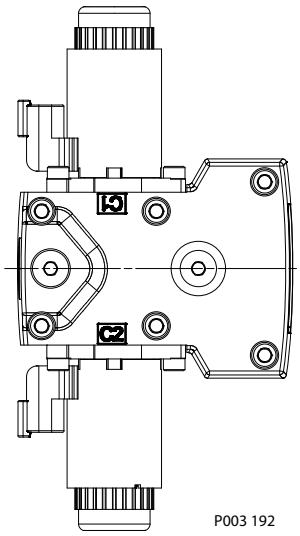

NFPE schematic

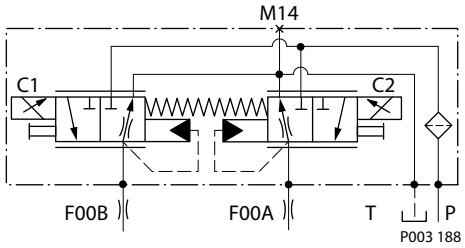

Control Signal Requirements

The pump displacement is proportional to the solenoid signal current, but it also depends upon pump input speed and system pressure. This characteristic also provides a power limiting function by reducing the pump swash-plate angle as system pressure increases.

A typical response characteristic is shown in the accompanying graph below:

Pump displacement vs. input signal

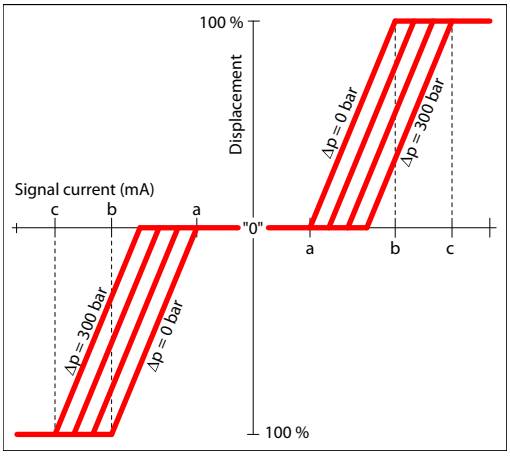

Control current requirements

Voltage*	a	b	c	Pin config.
12 V_{DC}	694 mA	1168 mA	1540 mA	any order
24 V_{DC}	347 mA	600 mA	770 mA	

* Factory test current, for vehicle movement or application actuation expect higher or lower value.

Control Solenoid Data

Description		12 V	24 V
Maximum current		1800 mA	920 mA
Nominal coil resistance	@ 20 °C [68 °F]	3.66 Ω	14.20 Ω
	@ 80 °C [176 °F]	4.52 Ω	17.52 Ω
Inductance		33 mH	140 mH
PWM signal frequency	Range	70 – 200 Hz	
	Recommended*	100 Hz	
IP Rating	IEC 60 529	IP 67	
	DIN 40 050, part 9	IP 69K with mating connector	
Connector color		Black	

* PWM signal required for optimum control performance.

Single Pump Output Flow Direction

Shaft rotation	Clock-Wise (CW)		Counter-Clock-Wise (CCW)	
Coil energized*	C1	C2	C1	C2
Port A	in	out	out	in
Port B	out	in	in	out
Servo port pressurized	M5	M4	M5	M4

* For coil location see installation drawings.

Connector

Connector DEUTSCH, 2-pin

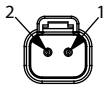

Description	Quantity	Order data
Mating connector	1	DEUTSCH DT06-2S
Wedge lock	1	DEUTSCH W2S
Socket contact (16–18 AWG)	2	DEUTSCH 0462-201-16141
Danfoss mating connector kit	1	K29657

Control response

H1P controls are available with optional control passage orifices to assist in matching the rate of swash-plate response to the application requirements.

The time required for the pump output flow to change from zero to full flow (acceleration) or full flow to zero (deceleration) is a net function of spool porting, orifices, and charge pressure.

A swash-plate response times table is available for each frame size. Testing should be conducted to verify the proper orifice selection for the desired response. Typical response times at the following conditions:

Δ p = 250 bar [3626 psi]
Charge pressure = 20 bar [290 psi]
Viscosity and temperature = 30 mm^2/s [141 SUS] and 50 °C [122 °F]
Speed = 1800 min^{-1} (rpm)

Response Time

Stroking direction	0.8 mm [0.03 in] orifice	1.3 mm [0.05 in] orifice	2.3 mm [0.09 in] orifice
Neutral to full flow	4.3 s	1.9 s	0.8 s
Full flow to neutral	2.6 s	1.1 s	0.5 s

Hybrid Load Control (HLC)

The Hybrid Load Control (**HLC**) is a displacement (flow) control that combines two basic behaviors in one unit:

- Load independent EDC behavior (EDC mode).
- Load dependent NFPE behavior (NFPE mode).

Pump swash plate position is proportional to the input command. The feedback link for the swashplate position is active when a bias current is applied. This enables the EDC control behavior in pumping mode.

Due to the two operation modes, the vehicle or load speed is dependent on pump displacement, the prime mover speed, and motor displacement in EDC mode. In NFPE mode it depends on pump displacement, prime mover speed, motor displacement, and **system load** (pressure).

When the pump is in motoring mode (vehicle deceleration / braking), even in NFPE mode the pump almost behaves like in EDC mode. The load dependency in these operating conditions is a lot less compared to a standard NFPE control. This leads to a stronger and more controllable hydraulic braking of the application.

Note

Under some circumstances, such as contamination, the control spool could stick and cause the pump to stay at some displacement.

Hybrid load control

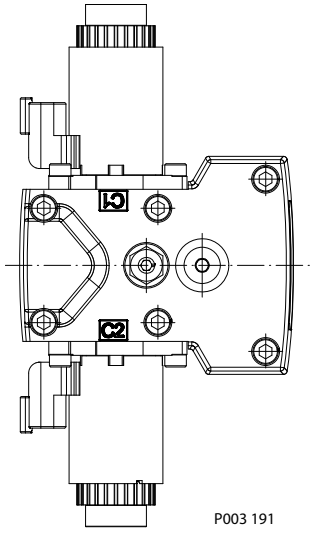

NFPE schematic

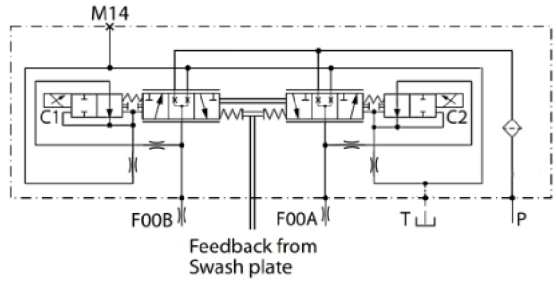

HLC Operation

H1 pump HLC's are current driven controls requiring a Pulse Width Modulated (PWM) signal.

The PWM signal causes the solenoid pin to push against the porting spool, which pressurizes one end of the servo piston, while draining the other. Pressure differential across the servo piston moves the swashplate.

Based on the control spool design and two control characteristics, the current ranges for EDC and NFPE mode differ from each other (see section: *HLC Control signal requirements* on page 36)

The HLC has a positive neutral deadband because of the control spool porting, preloads from the servo piston assembly, and the linear control spring. Once the neutral threshold current is reached, the swashplate is positioned directly proportional to the control current. To minimize the effect of the control neutral deadband, we recommend the transmission controller or operator input device to apply a jump up current close to offset a portion of the neutral deadband.

The neutral position of the control spool does provide a positive preload pressure to each end of the servo piston assembly.

When the control input signal is either lost or removed, or if there is a loss of charge pressure, the spring-loaded servo piston will automatically return the pump to the neutral position.

Control mode actuation, EDC vs. NFPE

In standard operations, if there is only one coil activated the control is in NFPE mode. To activate the EDC mode a bias current of 200mA must be applied to both coils.

HLC actuation

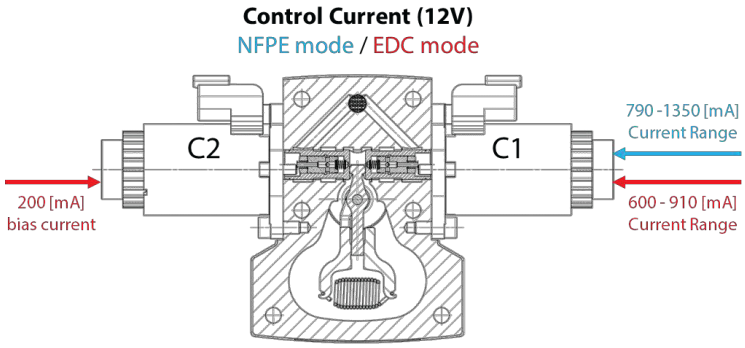

HLC Control signal requirements

Pump displacement vs. control current in EDC mode

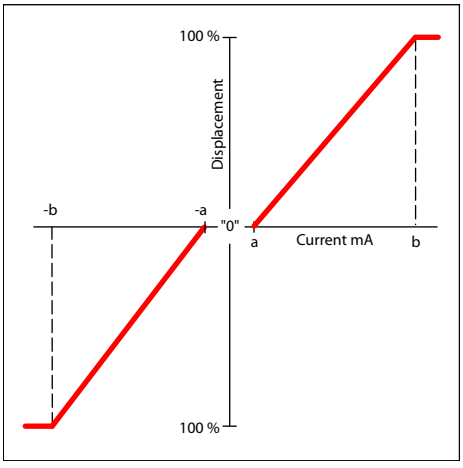

EDC control current

Voltage EDC mode		**12 V_{DC}**	**24 V_{DC}**
Standby currrent (bias currrent)		**200mA**	**100mA**
Minimum current to stroke pump	**a***	600mA ± 80 mA	300mA ± 55mA
	b	910mA ± 55 mA	455mA ± 55 mA
Pin connections		any order	

* Factory test current, for vehicle movement or application actuation expect higher or lower value.

Pump displacement vs. control currrent, in NFPE mode

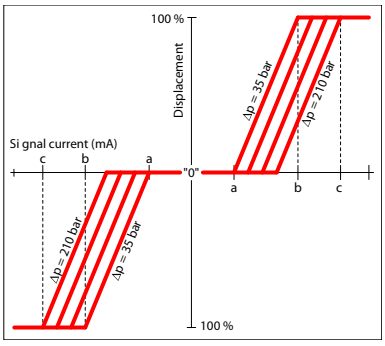

Voltage EDC mode		12 V_{DC}	24 V_{DC}
Minimum current to stroke pump	**a***	790mA ± 80 mA	395mA ± 40mA
	b	1300mA ± 110 mA	650mA ± 55 mA
	c	1350mA ± 110 mA	675mA ± 55 mA
Pin connections		any order	

* Factory test current, for vehicle movement or application actuation expect higher or lower value.

HLC Single Pump Output Flow Direction

Single Pump Output Flow Direction (NFPE and EDC)

Shaft rotation	Clock-Wise (CW)		Counter-Clock-Wise (CCW)	
Coil energized*	**C1**	**C2**	**C1**	**C2**
Port A	out	in	in	out
Port B	in	out	out	in
Servo port pressurized	M4	M5	M4	M5

* For coil location see installation drawings.

Connector

Connector DEUTSCH, 2-pin

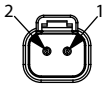

Description	Quantity	Order data
Mating connector	1	DEUTSCH DT06-2S
Wedge lock	1	DEUTSCH W2S
Socket contact (16–18 AWG)	2	DEUTSCH 0462-201-16141
Danfoss mating connector kit	1	K29657

Control response

H1P controls are available with optional control passage orifices to assist in matching the rate of swash-plate response to the application requirements.

The time required for the pump output flow to change from zero to full flow (acceleration) or full flow to zero (deceleration) is a net function of spool porting, orifices, and charge pressure.

A swash-plate response times table is available for each frame size. Testing should be conducted to verify the proper orifice selection for the desired response. Typical response times at the following conditions:

Δ p = 250 bar [3626 psi]
Charge pressure = 20 bar [290 psi]
Viscosity and temperature = 30 mm^2/s [141 SUS] and 50 °C [122 °F]
Speed = 1800 min^{-1} (rpm)

HLC Response Time

Stroking direction	0.8 mm [0.03 in] orifice	1.3 mm [0.05 in] orifice	No orifice
Neutral to full flow	2.8 s	1.3 s	0.7 s
Full flow to neutral	2.3 s	1.1 s	0.5 s

Automotive Control (AC)

The H1 **A**utomotive **C**ontrol (AC) is an electric NFPE Control with an integrated micro-controller, installed on the pump. The integrated micro-controller enhanced control performance with a flexible, configurable control scheme for an entire single path propel transmission. It can be used in combination with fixed and variable displacement hydraulic-motors. With the pre-installed application software and easily changeable control parameters, it is possible to tailor the vehicle's driving behavior to the individual requirements of the customer.

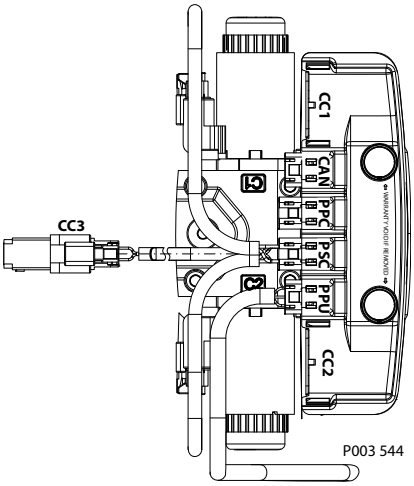

The H1 Automotive Control is divided into 2 systems:

- AC-1
- AC-2

AC-2 is an extension of AC-1 that features an integrated pump swash plate angle sensor and software enabled functions such as Swash Plate Control.

Mode types

The application software provides 3 different hydrostatic propel methods, defined as mode types, which can be used individually.

- **Automotive Load dependent** (torque controlled) driving behavior. Setpoint for the drive curve is the engine rpm.
- **Non-Automotive Load independent** (speed controlled) driving mode. Setpoint for the drive curve is a Joystick or drive pedal signal, independent of the engine rpm. The best performance will achieved with an AC-2 Swash Plate Angle Sensor.
- **Creep-Automotive Load dependent** (torque controlled) driving behavior (like Automotive). Setpoint for the drive curve is the engine rpm. The setpoint can be reduced by the creep potentiometer if a high engine rpm in combination with low vehicle speed is needed.

Basic functions

- Four selectable system modes, selectable via switch.
- Individual settings for forward and reverse driving direction (4 x 2 curves).
- Independent pump and hydraulic-motor profiling and ramping for each mode.
- Electric drive pedal connection
- Electronic inching function without separate control valve
- Electric creep mode potentiometer
- Configurable System Mode & Direction change
- Load independent pump displacement control with integrated Swash Plate Angle Sensor (AC-2)
- Hydraulic-motor displacement control including brake pressure defeat function

Performance functions

- ECO fuel saving mode with automatic reduction of the engine speed during transport (Cruise control)
- Vehicle constant speed drive control
- Vehicle speed limitation
- Dynamic brake light, automatic park brake, reverse buzzer and status LED outputs
- Vehicle speed controlled output function.
- Temperature compensation for predictable performance
- Advanced CAN J1939 interface for the information exchange with the vehicle control system

Protection and safety functions

- Safety controlled vehicle start protection with engine speed check, battery check and FNR must be in neutral, etc..
- Operator presence detection
- Hydraulic system overheat and low-temperature protection
- Hydraulic motor over speed protection
- Park brake test mode for roller applications to fulfill SAE J1472 / EN500-4.
- SIL2 compliant

Engine control and protection

- CAN J1939 engine interface
- Engine speed control via drive pedal with safety controlled monitoring function
- Engine antistall protection
- Engine over speed protection during inching
- Engine speed dependent Retarder control
- Engine cold start protection

Installation features

- Factory calibration for hysteresis compensation.
- Starting current adjustment in the factory
- Pre-installed application software and parameter files

For more information, see *Automotive Control for H1 Single Pumps Technical Information*, **BC152986482596**.

Fan Drive Control (FDC)

The Fan Drive Control (**FDC**) is a non-feedback control in which an electrical input signal activates the proportional solenoid that ports charge pressure to either side of the pump servo cylinder. The single proportional solenoid is used to control pump displacement in the forward or reverse direction.

The control spool is spring biased to produce maximum forward pump displacement in the absence of an electrical input signal. Based on the spring bias spool default forward flow for a CW rotation pump is out of port B while default forward flow for a CCW rotation pump is out of port A.

Under some circumstances, such as contamination, the control spool could stick and cause the pump to stay at some displacement.

FDC control

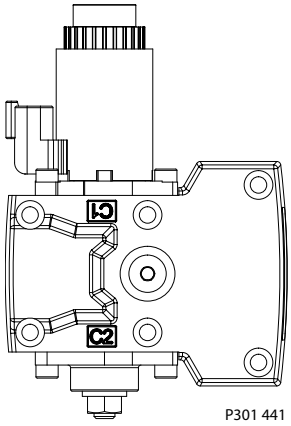

FDC schematic

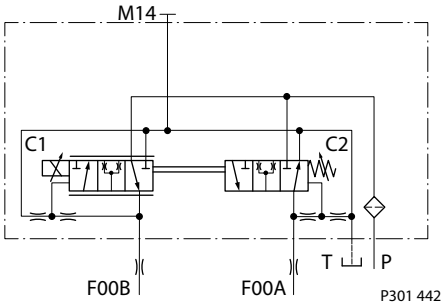

The pump should be configured with 0.8 mm control orifices to provide slowest response and maximize system stability. Additionally, pressure limiter (PL) valves are used to limit maximum fan trim speed in both (forward and reverse) directions.

H1 pumps with FDC will be delivered from factory with nominal pressure limiter setting of 150 bar [2175 psi]. The PL must be re-adjusted to ensure that the fan reaches the desired fan speed to satisfy the cooling needs of the system. HPRV setting must be always at least 30 bar [435 psi] higher than PL setting.

For more information necessary to properly size and configure a hydraulic fan drive system, see *Hydraulic Fan Drive Design Guidelines* **AB152886482265**.

Warning

Use in other systems could result in unintended movement of the machine or it's elements. Loss of the input signal to this control will cause the pump to produce maximum flow.
The FDC is for Fan Drive systems only!

Due to the fail-safe functionality of the FDC control the pump will stroke to max. displacement in case the input signal to the pump control and the Diesel engine will be switched off at the same time. In this situation a low loop event can occur which may damage the pump. Therefore, it's strictly recommended to keep the input signal to the pump control alive while switching off the engine.
For further information please contact your Danfoss representative.

Control Signal Requirements

The pump displacement is proportional to the solenoid signal current, but it also depends upon pump input speed and system pressure. This characteristic also provides a power limiting function by reducing the pump swash plate angle as system pressure increases. A typical response characteristic is shown in the accompanying graph below:

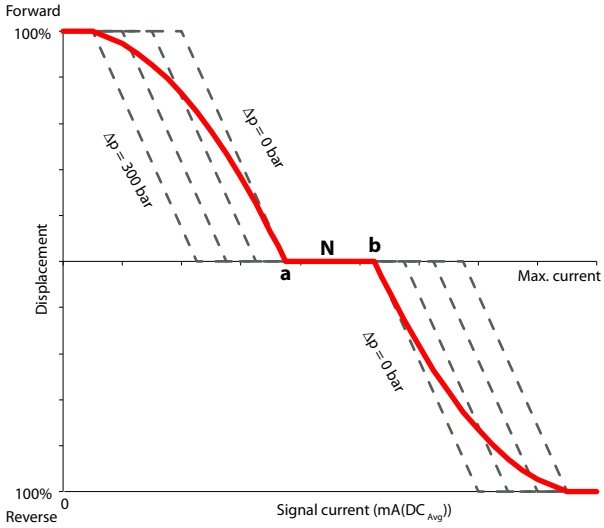

a – Forward threshold

b – Reverse threshold

N – Neutral override current

Control current requirements

Voltage*	a	N	b	Pin config.
12 V_{DC}	780 mA	1100 mA	1300 mA	any order
24 V_{DC}	400 mA	550 mA	680 mA	

* Factory test current, for fan movement expect higher or lower value.

Control Solenoid Data

Description		12 V	24 V
Maximum current		1800 mA	920 mA
Nominal coil resistance	@ 20 °C [68 °F]	3.66 Ω	14.20 Ω
	@ 80 °C [176 °F]	4.52 Ω	17.52 Ω
Inductance		33 mH	140 mH
PWM signal frequency	Range	70 – 200 Hz	
	Recommended*	100 Hz	
IP Rating	IEC 60 529	IP 67	
	DIN 40 050, part 9	IP 69K with mating connector	
Connector color		Black	

* PWM signal required for optimum control performance.

Single Pump Output Flow Direction

Pump output flow direction vs. control signal

Shaft rotation		ClockWise			CounterClockWise		
Control Logic	**12 V**	**0-780 mA**	**1100 mA**	**1300-1800 mA**	**0-780 mA**	**1100 mA**	**1300-1800 mA**
	24 V	**0-400 mA**	**550 mA**	**680-920 mA**	**0-400 mA**	**550 mA**	**680-920 mA**
Port A		in	no flow	out	out	no flow	in
Port B		out	no flow	in	in	no flow	out
Servo port pressurized		M5	n/a	M4	M5	n/a	M4

Warning

Loss of input signal to the control will cause the pump to produce maximum flow.

Connector

Connector DEUTSCH, 2-pin

Description	Quantity	Order data
Mating connector	1	DEUTSCH DT06-2S
Wedge lock	1	DEUTSCH W2S
Socket contact (16–18 AWG)	2	DEUTSCH 0462-201-16141
Danfoss mating connector kit	1	K29657

Control response

H1P controls are available with optional control passage orifices to assist in matching the rate of swash-plate response to the application requirements.

The time required for the pump output flow to change from zero to full flow (acceleration) or full flow to zero (deceleration) is a net function of spool porting, orifices, and charge pressure.

A swash-plate response times table is available for each frame size. Testing should be conducted to verify the proper orifice selection for the desired response. Typical response times at the following conditions:

Δ p = 250 bar [3626 psi]
Charge pressure = 20 bar [290 psi]
Viscosity and temperature = 30 mm^2/s [141 SUS] and 50 °C [122 °F]
Speed = 1800 min^{-1} (rpm)

Response Time

Stroking direction	0.8 mm [0.03 in] orifice
Full flow to neutral	3.9 s
Full forward flow to full reverse flow	5.6 s

Manual Override (MOR)

All controls are available with a manual override functionality, either as a standard or as an option for temporary actuation of the control to aid in diagnostics.

Control with manual override

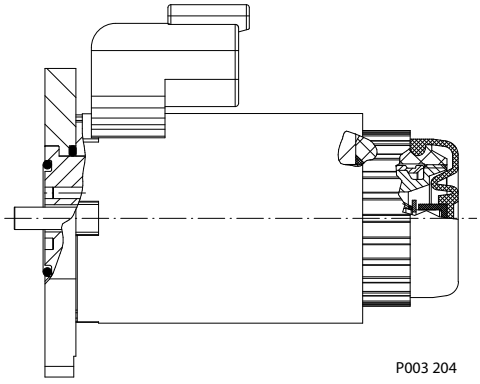

MOR schematic (EDC control shown)

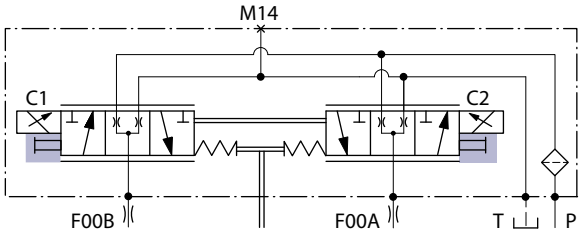

Feedback from swash plate.

The MOR plunger has a 4 mm diameter and must be manually depressed to be engaged. Depressing the plunger mechanically moves the control spool which allows the pump to go on stroke. The MOR should be engaged anticipating a full stroke response from the pump.

An o-ring seal is used to seal the MOR plunger where initial actuation of the function will require a force of 45 N to engage the plunger. Additional actuation typically require less force to engage the MOR plunger.

Proportional control of the pump using the MOR should not be expected.

Warning

Unintended MOR operation will cause the pump to go into stroke; *example:* vehicle lifted off the ground.
The vehicle or device must always be in a safe condition when using the MOR function.

Refer to the pump output flow direction vs. control signal table for the relationship of solenoid to direction of flow.

Swashplate angle sensor for EDC controls

The angle sensor detects the swash plate position with an accuracy dependent upon the calibration effort done for the application and direction of rotation from the neutral position. At minimum the sensor can be used for forward, neutral and reverse (FNR) detection.

The sensor works on the hall-effect technology. The implemented technology is based on a measurement of the magnetic field direction in parallel to the chip surface. This field direction is converted to a voltage signal at the output.

Enhanced calibration of the non-linear behavior leads to more exact calculation of the pump swashplate angle. The 4-pin DEUTSCH connector is part of the sensor housing. The swashplate angle sensor is available for all EDC controls for 12 V and 24 V.

Swashplate angle vs. output of supply voltage

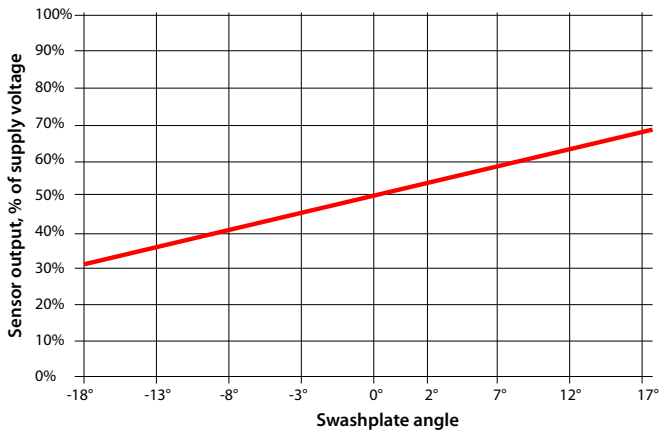

Warning

Strong magnetic fields in the proximity of the sensor can influence the sensor signal and must be avoided.

Note

Contact your Danfoss representative in case the angle sensor will be used for safety functions.

Swash plate angle sensor parameters (EDC)

Parameter	Minimum	Typical	Maximum
Supply voltage range	4.5 V_{DC}	5 V_{DC}	5.5 V_{DC}
Supply protection	–	–	18 V_{DC}
Pump neutral output (% of supply voltage)	–	50%	–
Working range (swash plate angle)	–18°	–	18°
Required supply current	–	–	30 mA
Output current signal	–	9 mA	11 mA
Working temperature	–40 °C	80 °C	115 °C

Electrical Protection	Standard	Class
IP Rating	IEC 60 529	IP 67
	DIN 40 050, part 9	IP 69K with mating connector
EMC Immunity	ISO 11452-2	100 V/m

Note

Calibration of the sensor output within the software is mandatory. Vehicle neutral thresholds in the software (±0.5°) are vehicle dependent and must consider different conditions, example: system temperature, system pressure and/or shaft speed.

For safety function: If the sensor fails (invalid signal <10% or >90% of supply voltage), it must be sure that the ECU will go into a diagnostic mode and shift into limited mode in order for the driver to take the full control or the mechanical breaks should be activated. Strong magnetic fields in the proximity of the sensor can influence the sensor signal and must be avoided.

H1P Swash Plate Angle Sensor Connector

Connector DEUTSCH, 4-pin

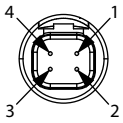

1	Ground (GND)
2	Not connected
3	Output signal 1 (SIG 1)
4	Supply (V+)

Description	Quantity	Order number
Mating connector	1	DEUTSCH DTM06-4S-E004
Wedge lock	1	DEUTSCH WM-4S
Socket contact	4	DEUTSCH 0462-201-2031
Blind socket	1	DEUTSCH 0413-204-2005
Danfoss mating connector kit	1	11212713

Interface with ECU (EDC)

Interface with ECU diagram

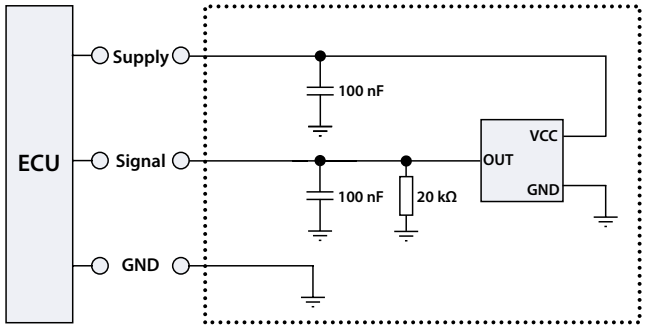

Swash Plate Angle Sensor for NFPE and AC2 Controls

The angle sensor detects the swash plate angle position and direction of rotation from the zero position. The swash angle sensor works on the AMR sensing technology. Under the saturated magnetic field, the resistance of the element varies with the magnetic field direction.

The output signal give a linear output voltage for the various magnet positions in the sensing range.

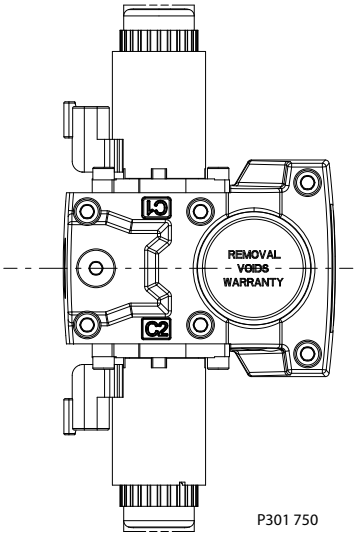

Swash Plate Angle Characteristic

The volumetric losses depend on pump max. displacement, actual displacement, speed, delta pressure, viscosity and temperature.

Swashplate angle vs. output voltage (calibrated at 50 °C)

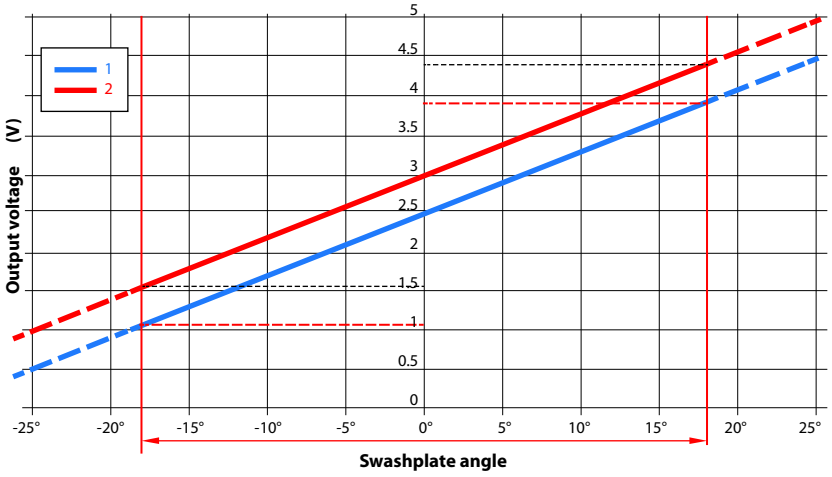

1. Signal 1 (nominal)
2. Signal 2 (redundant)

The displacement can be calculated by:

$$V = \frac{\tan \alpha \cdot V}{\tan 18°} \quad (cm^3)$$

The corresponding flow is:

$$Q = \frac{V \cdot n \cdot \eta_{vol}}{1000} \quad (l/min)$$

Swash Plate Angle Sensor Parameters (NFPE/AC)

Parameter	Minimum	Typical	Maximum
Supply voltage range	4.75 V	5 V	5.25 V
Supply protection	–	–	28 V

Parameter	Minimum	Typical	Maximum
Supply current	–	22 mA	25 mA
Output current (Signal 1, 2)	–	0.1 mA	–
Short circuit output current to supply or GND[1)]	–	–	7.5 mA
Sensitivity	70.0 mV/deg	78.0 mV/deg	85.8 mV/deg
Working range (swash plate angle)	–18°	0°	18°
Correlation between signals 1 and 2[2)]	475 mV	500 mV	525 mV

[1)] Up to duration of 2.5 seconds at 25°C

[2)] Signal 1 (nominal) is lower than signal 2 (redundant)

Swash Plate Angle Sensor Connector (NFPE)

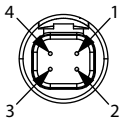

1 Ground (GND)

2 Output Signal 2 (SIG 2) – Secondary (redundant)

3 Output signal 1 (SIG 1)

4 Supply (V+)

Description	Quantity	Order number
Mating connector	1	DEUTSCH DTM06-4S-E004
Wedge lock	1	DEUTSCH WM-4S
Socket contact	4	DEUTSCH 0462-201-2031
Blind socket	1	DEUTSCH 0413-204-2005
Danfoss mating connector kit	1	11212713

Interface with ECU (NFPE)

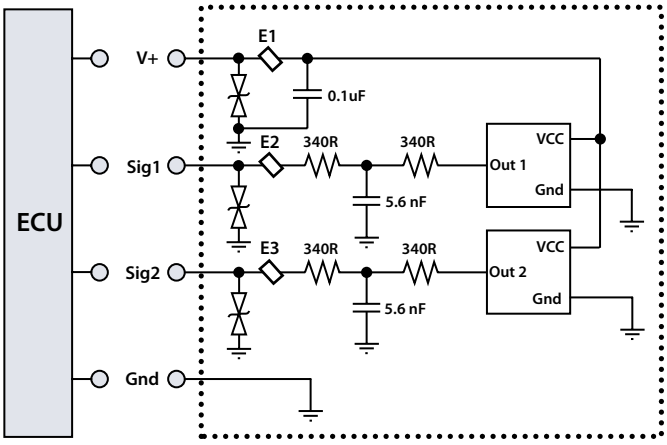

Minimum recommended load resistance is 100 kΩ.

Control Cut Off Valve (CCO)

The H1 pump offers an optional control cut off valve integrated into the control. All EDC, NFPE and MDC controls are available with a CCO valve. This valve will block charge pressure to the control, allowing the servo springs to de-stroke both pumps regardless of the pump´s primary control input.

There is also a hydraulic logic port, X7, which can be used to control other machine functions, such as spring applied pressure release brakes. The pressure at X7 is controlled by the control cut off solenoid. The X7 port would remain plugged if not needed.

In the normal (de-energized) state of the solenoid charge flow is prevented from reaching the controls. At the same time the control passages and the X7 logic port are connected and drained to the pump case. The pump will remain in neutral, or return to neutral, independent of the control input signal. Return to neutral time will be dependent on oil viscosity, pump speed, swashplate angle, and system pressure.

When the solenoid is energized, charge flow and pressure is allowed to reach the pump control. The X7 logic port will also be connected to charge pressure and flow.

The solenoid control is intended to be independent of the primary pump control making the control cut off an override control feature. It is however recommended that the control logic of the CCO valve be maintained such that the primary pump control signal is also disabled whenever the CCO valve is de-energized. Other control logic conditions may also be considered.

The CCO valve is available with 12 V or 24 V solenoid.

The response time of the unit depends on the control type and the used control orifices.

CCO schematic (MDC shown)

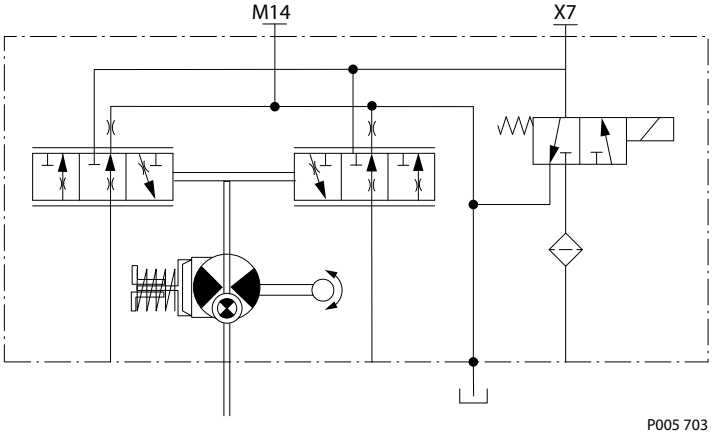

Brake gauge port with MDC

Caution

It is not recommended to use brake port for any external flow consumption to avoid malfunction of CCO function.

CCO Connector (MDC)

Connector DEUTSCH, 2-pin

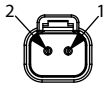

Description	Quantity	Order data
Mating connector	1	DEUTSCH DT06-2S
Wedge lock	1	DEUTSCH W2S
Socket contact (16–18 AWG)	2	DEUTSCH 0462-201-16141
Danfoss mating connector kit	1	K29657

H1P CCO Connector (EDC, NFPE)

Connector CCO DEUTSCH, 2-pin with key C

Description	Quantity	Order number
Mating connector	1	DEUTSCH DT06-2S-C015
Wedge lock	1	DEUTSCH W2SC-P012
Socket contact	4	DEUTSCH 0462-201-16141
Danfoss mating connector kit	1	11212714

CCO solenoid data

Nominal supply voltage		12 V	24 V
Supply voltage	Maximum	14.6 V	29 V
	Minimum	9.5 V	19 V
Bi-directional diode cut off voltage		28 V	53 V
Nominal coil resistance at 20 °C		10.7 Ω	41.7 Ω
Supply current	Maximum	850 mA	430 mA
	Minimum	580 mA	300 mA
PWM frequency	Range	50 – 200 Hz	
	Preferred	100 Hz	
Electrical protection class		IP67 / IP69K with mating connector	

Note

CCO solenoids are design for battery voltage application within the voltage range in the table above, in consideration of a wide range of environmental temperature common for known hydraulic applications. Closed loop PWM current supply can be also applied and is helpful in case that the voltage range is exceeded, or ambient temperature could rise in an unusual manner.

Displacement Limiter

H1 pumps are designed with optional mechanical displacement (stroke) limiters factory set to max. displacement. The maximum displacement of the pump can be set independently for forward and reverse using the two adjustment screws to mechanically limit the travel of the servo piston down to 50% displacement.

Note

Adjustments under operating conditions may cause leakage. The adjustment screw can be completely removed from the threaded bore if backed out to far.

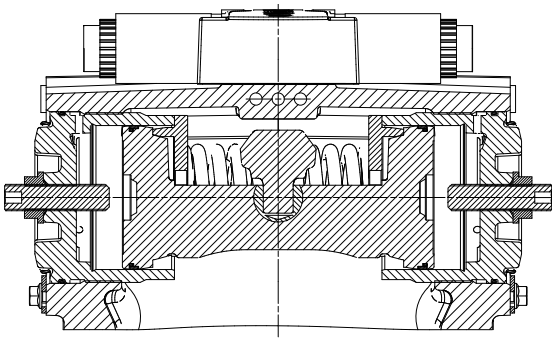

P003 266

H1P 089/100 Displacement Change (approximately)

Parameter	Size 089	Size 100	Size
1 turn of displacement limiter screw	9.3 cm^3 [0.57 in^3]	10.7 cm^3 [0.65 in^3]	
Internal wrench size	5 mm		
External wrench size	17 mm		
Torque for external hex seal lock nut	48 N•m [424 lbf•in]		

For more information, see *H1 Axial Piston Pumps, Service Manual,* **AX152886482551**, the section “Displacement Limiter Adjustment”.

Dimensions and Data

H1P 089/100 Input Shaft Option G1 (SAE C, 14 teeth)

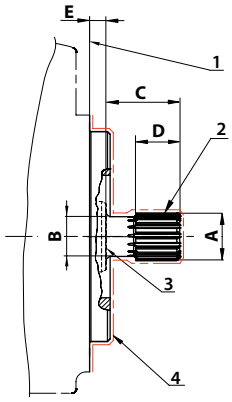

1. Mounting flange 127 – 4 per ISO 3019-1; surface to be paint free
2. **Spline Data:** 14 teeth, Pressure angle: 30°, Pitch: 12/24, Ø29.633 [1.167]; Fillet root side fit per ANSI B92.1-1996, Class 6H
3. Coupling must not protrude beyond this point
4. Shaft to be paint free

Dimensions

A	B	C	D[1)]	E
Ø31.14 ±0.08 [1.226 ±0.003]	Ø26 ±0.13 [1.024 ±0.005]	48.1 ±1.0 [1.894 ±0.039]	28.8 ±1.0 [1.134 ±0.039]	7.94 ±0.8 [0.313 ±0.03]

[1)] Minimum active spline length for the specified torque ratings.

Torque rating

Rated torque	Maximum torque
534 N•m [4720 lb•in]	816 N•m [7220 lb•in]

For definitions of maximum and rated torque values, refer to *H1 Axial Piston Pumps Basic Information,* **BC152886483968**, the section “Shaft Torque Ratings and Spline Lubrication”.

H1P Input Shaft Option G3 (SAE C, 13 teeth)

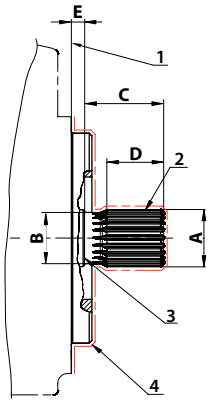

1. Mounting flange 127 – 4 per ISO 3019-1; surface to be paint free
2. **Spline Data:** 13 teeth, Pressure angle: 30°, Pitch: 8/16, Ø41.275 [1.625]; Fillet root side fit per ANSI B92.1-1996, Class 5
3. Coupling must not protrude beyond this point
4. Shaft to be paint free

Dimensions

A	B	C	D[1)]	E
Ø44.4 ±0.09 [1.746 ±0.004]	Ø36.4 ±0.25 [1.433 ±0.01]	67.0 ±1.0 [2.638 ±0.039]	39.5 ±1.0 [1.555 ±0.039]	8.05 ±0.8 [0.317 ±0.03]

[1)] Minimum active spline length for the specified torque ratings.

Torque rating

Rated torque	Maximum torque
1442 N•m [12 800 lbf•in]	2206 N•m [19 500 lbf•in]

For definitions of maximum and rated torque values, refer to *H1 Axial Piston Pumps Basic Information*, **BC152886483968**, the section “Shaft Torque Ratings and Spline Lubrication”.

H1P 089/100 Input Shaft Option G9 (SAE C-C, 23 teeth)

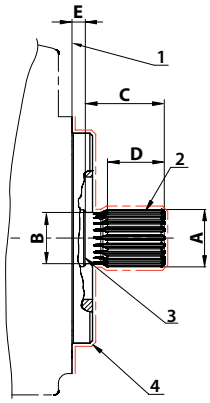

1. Surface of mounting flange 127 – 4 per ISO 3019-1 (SAE C); to be paint free
2. **Spline Data:** 23 teeth, Pressure angle: 30°, Pitch: 16/32, Ø36.513 [1.438]; Fillet root side fit per ANSI B92.1-1996, Class 6H
3. Coupling must not protrude beyond this point
4. Shaft to be paint free

Dimensions

A	B	C	D[1)]	E
Ø37.59 ±0.08 [1.480 ±0.003]	Ø33.6 ±0.13 [1.323 ±0.005]	54.0 ±1.0 [2.126 ±0.039]	38.2 ±1.0 [1.504 ±0.039]	7.94 ±0.8 [0.313 ±0.03]

[1)] Minimum active spline length for the specified torque ratings.

Torque rating

Rated torque	Maximum torque
999 N•m [8840 lb•in]	1818 N•m [16 090 lb•in]

For definitions of maximum and rated torque values, refer to *H1 Axial Piston Pumps Basic Information*, **BC152886483968**, the section “Shaft Torque Ratings and Spline Lubrication”.

H1P 089/100 Input Shaft Option F1 (SAE C, 21 teeth)

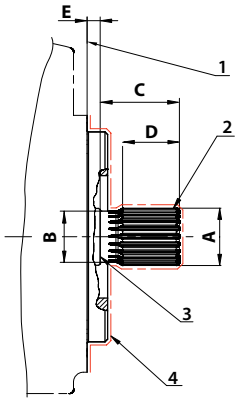

1. Mounting flange 127 – 4 per ISO 3019-1; surface to be paint free
2. **Spline Data:** 21 teeth, Pressure angle: 30°, Pitch: 16/32, Ø33.338 [1.313]; Fillet root side fit per ANSI B92.1-1996, Class 6H
3. Coupling must not protrude beyond this point
4. Shaft to be paint free

Dimensions

A	B	C	D[1)]	E
Ø34.42 ±0.08 [1.355 ±0.003]	Ø30.4 ±0.13 [1.197 ±0.005]	48.0 ±1 [1.894 ±0.039]	30.7 ±1 [1.209 ±0.0039]	7.94 ±0.8 [0.313 ±0.031]

[1)] Minimum active spline length for the specified torque ratings.

Torque rating

Rated torque	Maximum torque
760 N•m [6730 lbf•in]	1297 N•m [11 479 lbf•in]

For definitions of maximum and rated torque values, refer to *H1 Axial Piston Pumps Basic Information*, **BC152886483968**, the section “Shaft Torque Ratings and Spline Lubrication”.

H1P 089/100 Input Shaft Option F4, Code 38–3

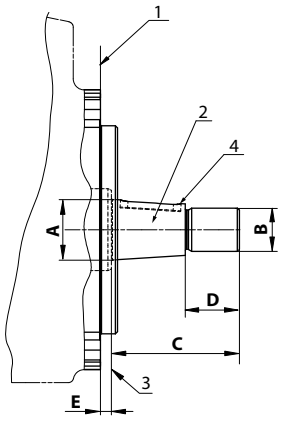

1. Mounting flange 127 – 4 per ISO 3019-1; surface to be paint free
2. **Tapered shaft:** Conical keyed shaft end similar to ISO3019-1 code 38–3; Suitable key $^{3}/_{8}$ x $^{3}/_{8}$ x 1 $^{1}/_{2}$ per ANSI B17.1
3. Coupling must not protrude beyond this point
4. Shaft to be paint free

Dimensions

A	B	C	D	E
Ø38.1 ±0.09 [1.5 ±0.004]	1$^{1}/_{8}$ –12	81.9 ±1.0 [3.224 ±0.039]	34.9 ±1.0 [1.374 ±0.039]	8.025 ±0.8 [0.36 ±0.03]

Torque rating

Rated torque[1)]	Maximum torque[2)]
1116 N•m [9880 lbf•in]	1488 N•m [13 170 lbf•in]

[1)] Rated torque includes just the capability of the press-fit in accordance with an assumed fastener grade 5.

[2)] Mating part must maintain a minimum gap width of 1.0 mm with the shaft shoulder after installation of the part. Transmittable torque will be reduced if the minimum gap requirement is not met.

For definitions of maximum and rated torque values, refer to *H1 Axial Piston Pumps Basic Information,* **BC152886483968**, the section "Shaft Torque Ratings and Spline Lubrication".

Tapered shaft customer acknowledgement

The Danfoss H1 tapered shaft has been designed using the industry standard ISO 3019-1, minus the through-hole in the end of the shaft. Danfoss guarantees the design and manufactured quality of the tapered shaft.

Danfoss recommends a self-locking nut instead of a castle nut and pin. The nut and mating square-cut key are customer supplied. The specified torque rating of the tapered shaft is based on the cross-sectional diameter of the shaft, through the keyway, and assumes the proper clamp and fit between shaft and coupling. The customer is responsible for the design and manufactured quality of the mating female coupling and key and applied torque on the nut. Danfoss has made provisions for the key in accordance to the ISO specification with the understanding that the key is solely to assist in the installation of the mating coupling.

Caution

Possible hazard because torque or loading inadvertently transmitted by the customer supplied key may lead to premature shaft failure. Torque must be transmitted by the taper fit between the shaft and it's mating coupling, not the key.

H1P Auxiliary Mounting, Option H1, A2 (SAE A, 11 teeth)

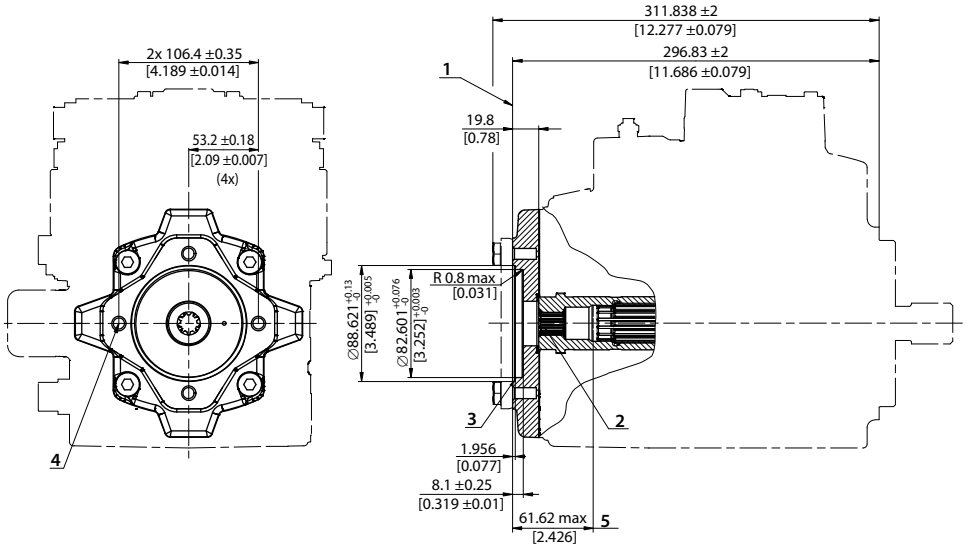

1. Auxiliary mounting pad for mating flange 82-2 per ISO 3019-1 (SAE A); Paint free
2. **Spline Data:** 11 teeth, Pressure angle: 30°, Pitch: 16/32, Ø17.463 [0.6875]; Fillet root side fit per ANSI B92.1-1996, Class 6; minimum active spline length 10.5 mm
3. O-ring seal required; Ref. Ø82.22 [3.237] ID x 2.62, cross section
4. Thread: M10x1.5-6H; 15 [0.59] min. depth (4x)
5. Mating shaft and shaft shoulder must not protrude beyond this point

Maximum Torque	296 N•m [2620 lbf•in]

For definitions of maximum and rated torque values, refer to *H1 Axial Piston Pumps Basic Information*, **BC152886483968**, the section “Shaft Torque Ratings and Spline Lubrication”.

Caution

Standard pad cover is installed only to retain coupling during shipping. Do not operate pump without an auxiliary pump or running cover installed.

H1P Auxiliary Mounting, Option H2, A2 (SAE A, 9 teeth)

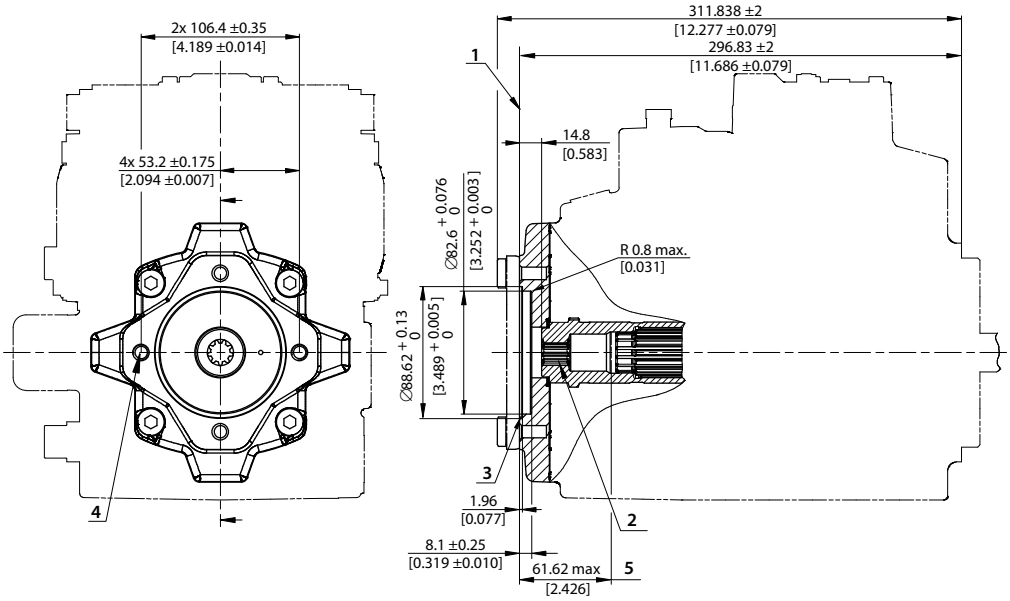

1. Auxiliary mounting pad for mating flange 82-2 per ISO 3019-1 (SAE A); Paint free
2. **Spline Data:** 9 teeth, Pressure angle: 30°, Pitch: 16/32, Ø14.288 [0.5625]; Fillet root side fit per ANSI B92.1-1996, Class 6; minimum active spline length 8.6 mm
3. O-ring seal required; Ref. Ø82.22 [3.237] ID x 2.62, cross section
4. Thread: M10x1.5-6H; 15 [0.59] min. depth (4x)
5. Mating shaft and shaft shoulder must not protrude beyond this point

Maximum Torque	162 N•m [1430 lbf•in]

For definitions of maximum and rated torque values, refer to *H1 Axial Piston Pumps Basic Information*, **BC152886483968**, the section "Shaft Torque Ratings and Spline Lubrication".

Caution

Standard pad cover is installed only to retain coupling during shipping. Do not operate pump without an auxiliary pump or running cover installed.

H1P Auxiliary Mounting, Option H3, A3 (SAE B, 13 teeth)

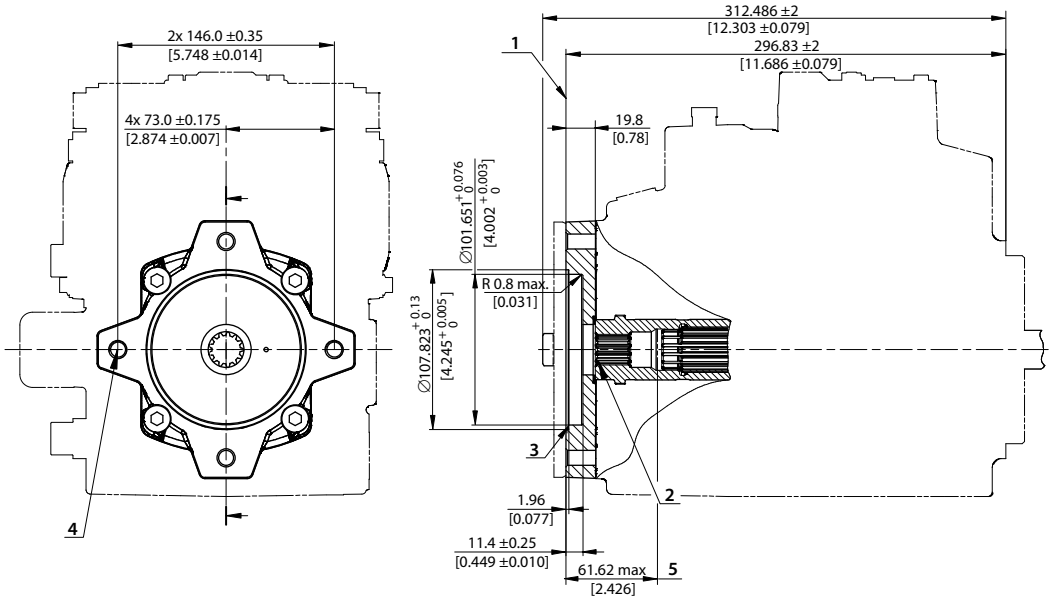

1. Auxiliary mounting pad for mating flange 101-2 per ISO 3019-1 (SAE B); Paint free
2. **Spline Data:** 13 teeth, Pressure angle: 30°, Pitch: 16/32, Ø20.638 [0.813]; Fillet root side fit per ANSI B92.1-1996, Class 6; minimum active spline length 12.4 mm
3. O-ring seal required; Ref. Ø94.92 [3.737] ID x 2.62, cross section
4. Thread: M12x1.75-6H; 20 [0.787] min. depth (4x)
5. Mating shaft and shaft shoulder must not protrude beyond this point

Maximum Torque	395 N•m [3500 lbf•in]

For definitions of maximum and rated torque values, refer to *H1 Axial Piston Pumps Basic Information*, **BC152886483968**, the section "Shaft Torque Ratings and Spline Lubrication".

Caution

Standard pad cover is installed only to retain coupling during shipping. Do not operate pump without an auxiliary pump or running cover installed.

H1P Auxiliary Mounting, Option H5, A4 (SAE B-B, 15 teeth)

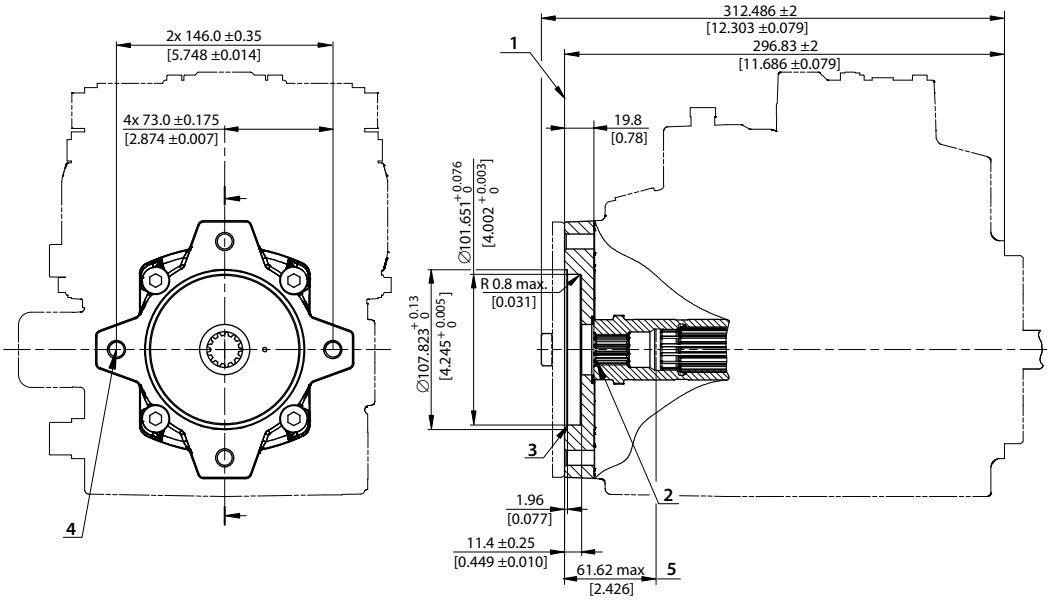

1. Auxiliary mounting pad for mating flange 101-2 per ISO 3019-1 (SAE B); Paint free
2. **Spline Data:** 15 teeth, Pressure angle: 30°, Pitch: 16/32, Ø23.813 [0.938]; Fillet root side fit per ANSI B92.1-1996, Class 6; minimum active spline length 14.3 mm
3. O-ring seal required; Ref. Ø94.92 [3.737] ID x 2.62, cross section
4. Thread: M12x1.75-6H; 20 [0.787] min. depth (4x)
5. Mating shaft and shaft shoulder must not protrude beyond this point

Maximum Torque	693 N•m [6130 lbf•in]

For definitions of maximum and rated torque values, refer to *H1 Axial Piston Pumps Basic Information*, **BC152886483968**, the section "Shaft Torque Ratings and Spline Lubrication".

Caution

Standard pad cover is installed only to retain coupling during shipping. Do not operate pump without an auxiliary pump or running cover installed.

H1P Auxiliary Mounting, Option H6, A5 (SAE C, 14 teeth)

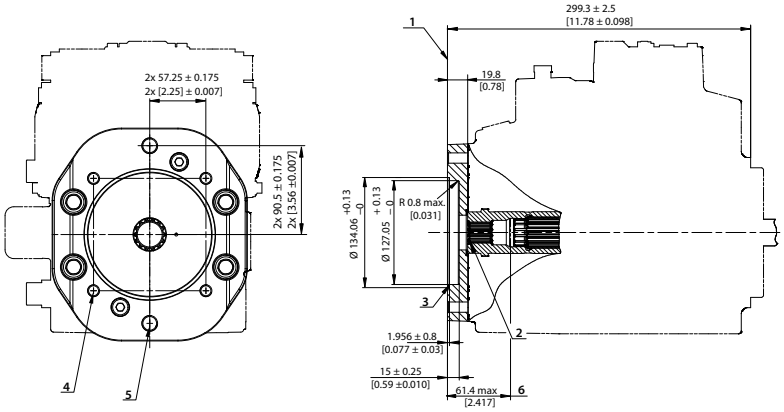

1. Auxiliary mounting pad for mating flange 127-4 per ISO 3019-1 (SAE C); Paint free
2. **Spline Data:** 14 teeth, Pressure angle: 30°, Pitch: 12/24, Ø29.633 [1.667]; Fillet root side fit per ANSI B92.1-1996, Class 6; minimum active spline length 17.8 mm
3. O-ring seal required; Ref. Ø120.32 ID x 2.62, cross section
4. Thread: M12x1.75-6H; 22.25 [0.876] min. depth (4x)
5. Thread: M16x2-6H; 22.25 [0.876] min. depth (2x)
6. Mating shaft and shaft shoulder must not protrude beyond this point

Maximum torque	816 N•m [7220 lbf•in]

For definitions of maximum and rated torque values, refer to *H1 Axial Piston Pumps Basic Information*, **BC152886483968**, the section "Shaft Torque Ratings and Spline Lubrication".

Caution

Standard pad cover is installed only to retain coupling during shipping. Do not operate pump without an auxiliary pump or running cover installed.

H1P 089/100 Auxiliary Mounting, Option S1 (SAE B-B, 14 teeth)

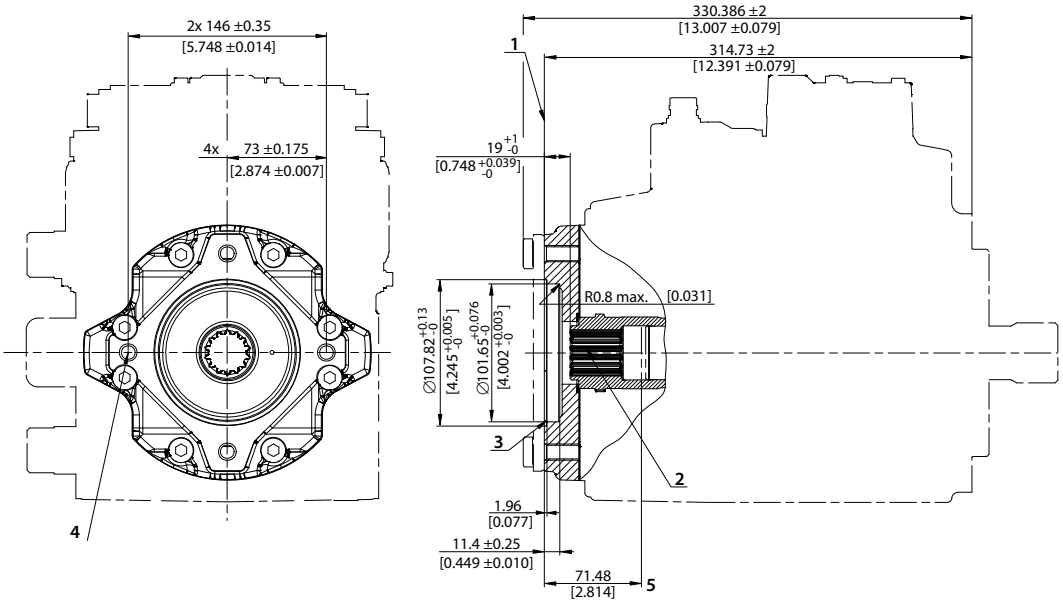

1. Auxiliary mounting pad for mating flange 101-2 per ISO 3019-1 (SAE B); Paint free
2. **Spline Data:** 14 teeth, Pressure angle: 30°, Pitch: 12/24, Ø29.633 [1.667]; Fillet root side fit per ANSI B92.1-1996, Class 6; minimum active spline length 17.8 mm
3. O-ring seal required; Ref. Ø101.32 ID x 2.62, cross section
4. Thread: M12x1.75-6H; 20 [0.787] min. depth (4x)
5. Mating shaft and shaft shoulder must not protrude beyond this point

Maximum torque	816 N•m [7220 lbf•in]

For definitions of maximum and rated torque values, refer to *H1 Axial Piston Pumps Basic Information,* **BC152886483968**, the section "Shaft Torque Ratings and Spline Lubrication".

Caution

Standard pad cover is installed only to retain coupling during shipping. Do not operate pump without an auxiliary pump or running cover installed.

H1P Displacement Limiter, Option B

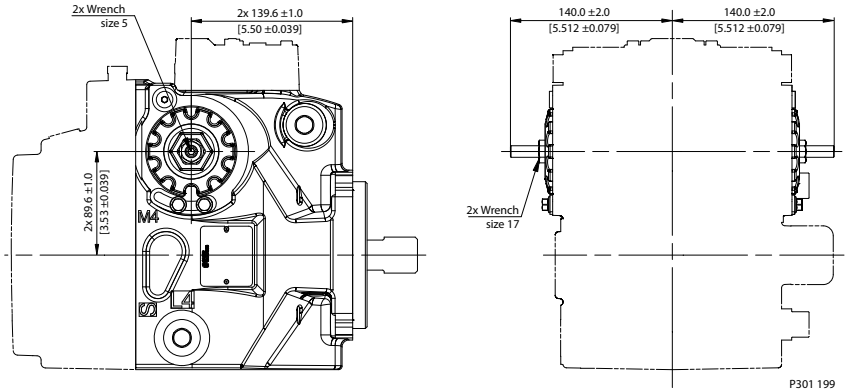

1. Displacement limiter screw (2x)
2. Displacement limiter seal nut (2x)

Wrench size, torque

Wrench size for DL screw	Wrench size for DL seal nut	Torque
5 internal hex	17 external hex	48 N•m [35 lb•ft]

Please contact Danfoss representative for specific installation drawings.

Single Pump Ports

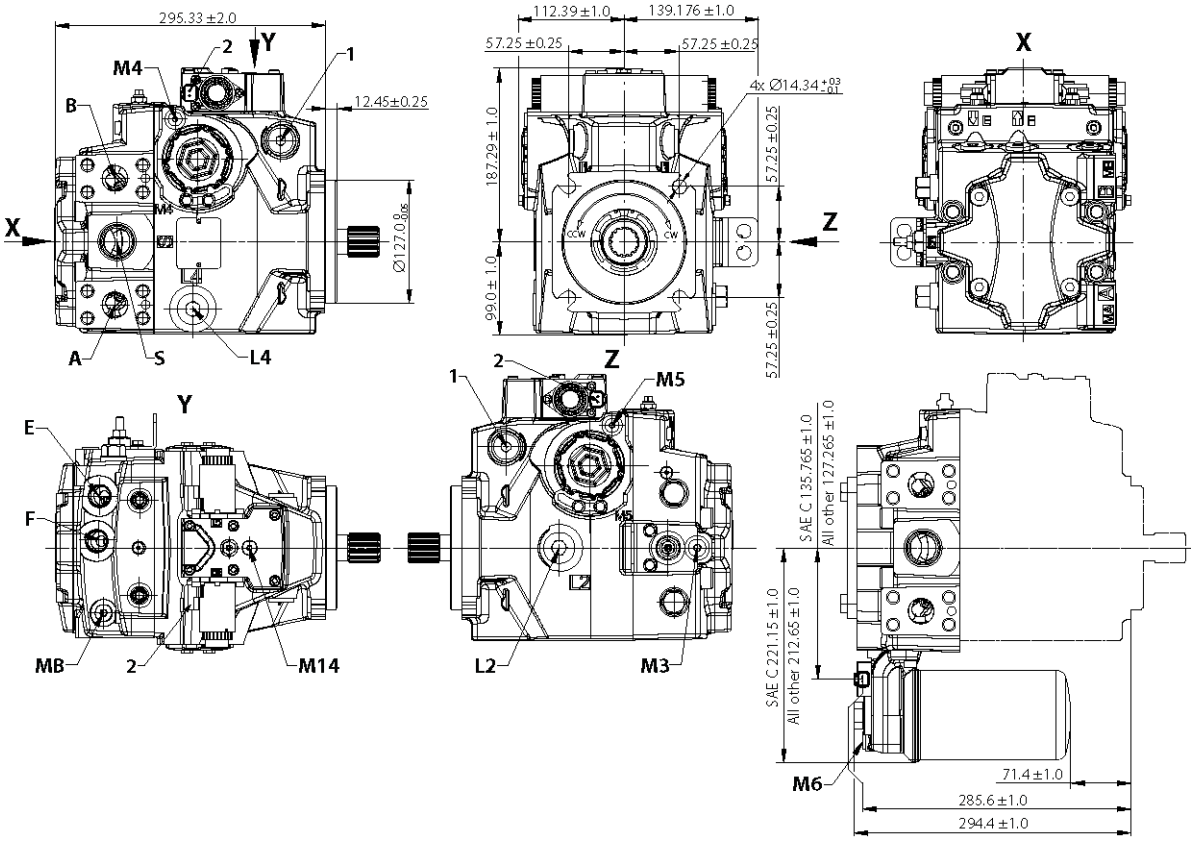

Ports per ISO 11 926-1

Port	Description	Size
A, B	System ports	Ø25.4 mm; M12 x 1.75; 20 min. full thread depth Recommended screw in depth 1.5 x thread dia
L2, L4	Case drain ports	$1\frac{1}{16}$–12
MA, MB	System **A/B** gauge ports	$\frac{9}{16}$–18
E/F	Charge filtration ports	$\frac{7}{8}$–14
M3	Charge pressure gauge port	$\frac{9}{16}$–18
M4, M5	Servo gauge port	$\frac{7}{16}$–20
M14	Case gauge port (EDC, FNR, NFPE)	$\frac{7}{16}$–20
S	Charge inlet port	$1\frac{5}{8}$–12 Recommended screw in depth 1.5 x thread dia
1	Case pressure port	$1\frac{1}{16}$–12
2	Connector DEUTSCH DT04-2P, to be paint free	

Please contact Danfoss representative for specific installation drawings.

H1P Dimensions

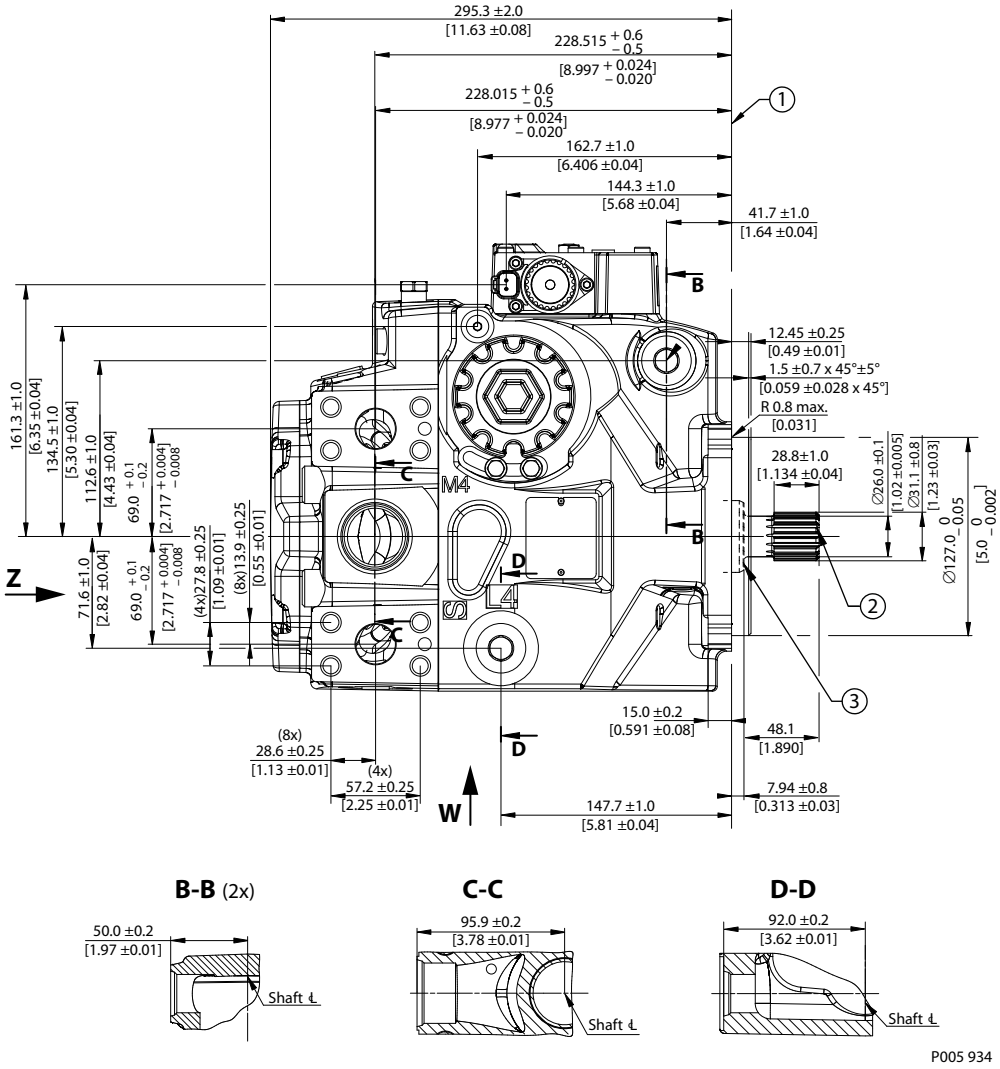

1. Mounting flange 127 – 4 per ISO 3019-1; surface to be paint free
2. Shaft to be paint free
3. Coupling must not protrude beyond this point

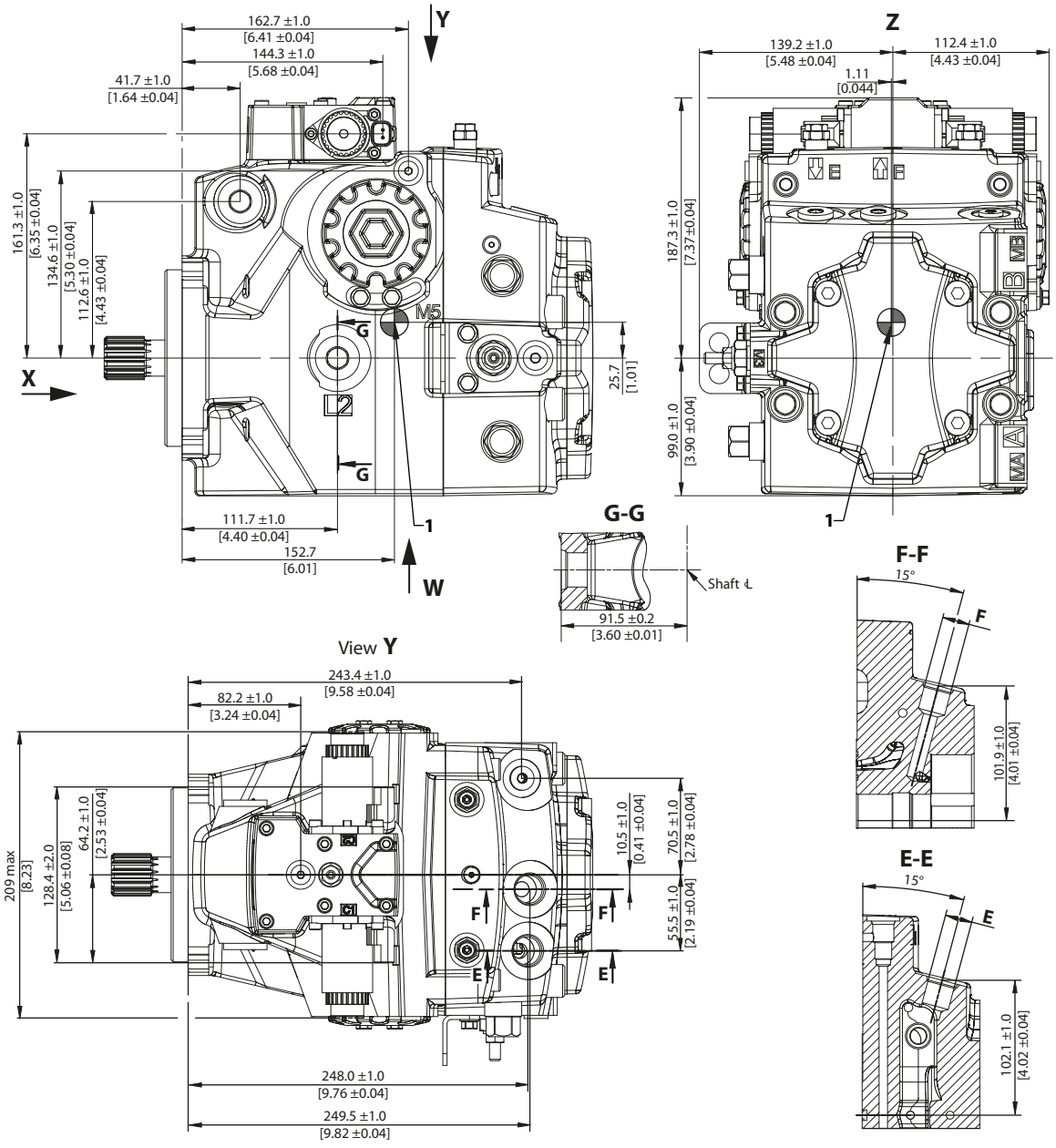

1 — Approximate center of gravity

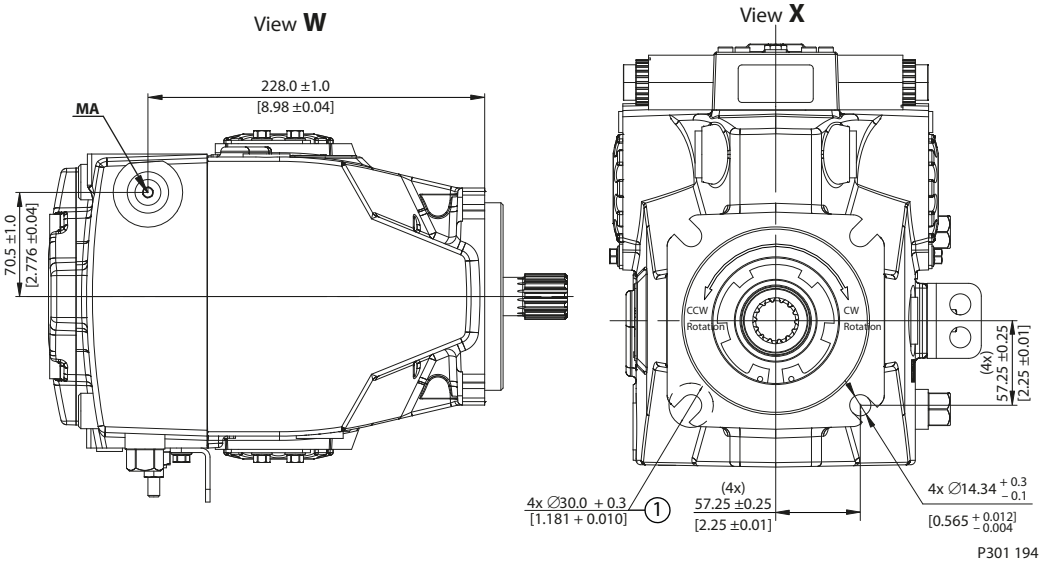

1 — Other side screw head space

Controls

EDC Options A2 and A3 (12/24 V)

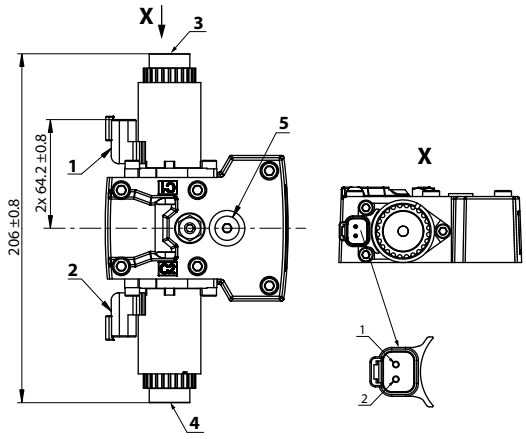

1. Control solenoid connector **C1** DEUTSCH DT04-2P, paint free
2. Control solenoid connector **C2** DEUTSCH DT04-2P, paint free
3. Control Manual OverRide **C1**
4. Control Manual OverRide **C2**
5. Case gauge port **M14** per ISO 1926-1: $^{7}/_{16}$–20

Pin	Assignment	Alternative	Pin	Assignment
1	Supply	OR	1	Ground
2	Ground		2	Supply

Please contact Danfoss representative for specific installation drawings.

EDC with MOR, Options A4 and A5 (12/24 V)

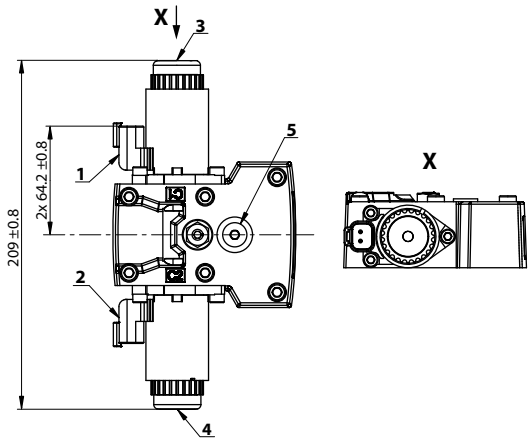

1. Control solenoid connector **C1** DEUTSCH DT04-2P, paint free
2. Control solenoid connector **C2** DEUTSCH DT04-2P, paint free
3. Control Manual OverRide **C1**
4. Control Manual OverRide **C2**
5. Case gauge port **M14** per ISO 1926-1: $^{7}/_{16}$–20

Depressing the plunger mechanically moves the control spool. Actuation allows full stroke pump response as per coil and rotation dependent control logic.

*Connector **C1/C2**: DEUTSCH DTM04-2P*

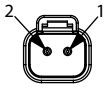

Pin	Assignment	Alternative	Pin	Assignment
1	Supply	OR	1	Ground
2	Ground		2	Supply

Please contact Danfoss representative for specific installation drawings.

EDC with CCO (key C), Options E7 and E8 (12/24 V)

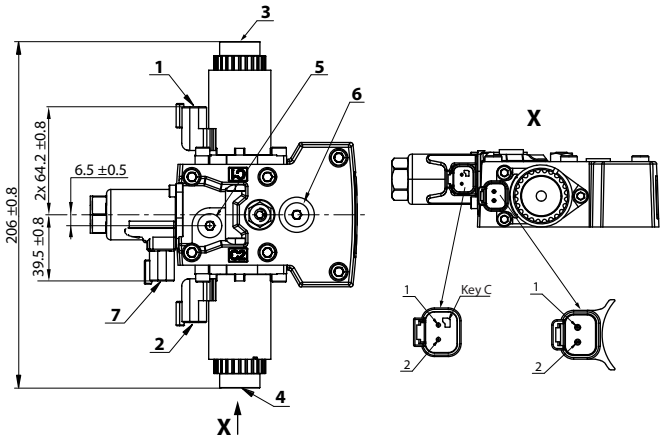

1. Control solenoid connector **C1** DEUTSCH DT04-2P, paint free
2. Control solenoid connector **C2** DEUTSCH DT04-2P, paint free
3. Control Manual OverRide **C1**
4. Control Manual OverRide **C2**
5. Brake gauge port **X7** per ISO 1926-1: $^{7}/_{16}$–20
6. Case gauge port **M14** per ISO 1926-1: $^{7}/_{16}$–20
7. Control-Cut-Off with C-key connector **C4** DEUTSCH DT04-2P, paint free

Pin	Assignment	Alternative	Pin	Assignment
1	Supply	OR	1	Ground
2	Ground		2	Supply

Please contact Danfoss representative for specific installation drawings.

EDC with ASNSR, Options: H2 and H3 (12/24 V)

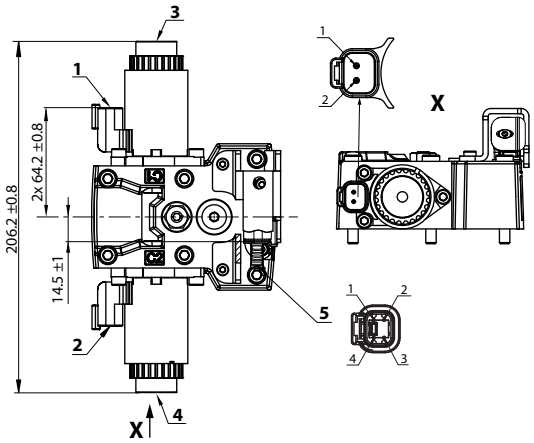

1. Control solenoid connector **C1** DEUTSCH DT04-2P, paint free
2. Control solenoid connector **C2** DEUTSCH DT04-2P, paint free
3. Control Manual OverRide **C1**
4. Control Manual OverRide **C2**
5. Angle sensor connector **S2** DEUTSCH DT04-4P, paint free

Connector DEUTSCH, 4-pin

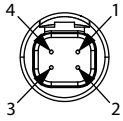

4-pin assignment:
1. Ground (GND)
2. Not connected
3. Output signal 1 (SIG 1)
4. Supply (V+)

*Connector **C1/C2**: DEUTSCH DTM04-2P*

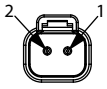

Pin	Assignment	Alternative	Pin	Assignment
1	Supply	OR	1	Ground
2	Ground		2	Supply

Please contact Danfoss representative for specific installation drawings.

EDC with MOR and ASNSR, Options H6 and H7 (12/24 V)

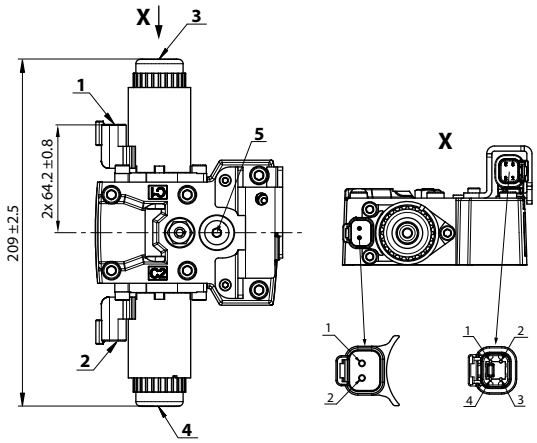

1. Control solenoid connector **C1** DEUTSCH DT04-2P, paint free
2. Control solenoid connector **C2** DEUTSCH DT04-2P, paint free
3. Control Manual OverRide **C1**
4. Control Manual OverRide **C2**
5. Case gauge port **M14** per ISO 1926-1: $^{7}/_{16}$–20

Connector DEUTSCH, 4-pin

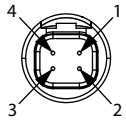

4-pin assignment:
1. Ground (GND)
2. Not connected
3. Output signal 1 (SIG 1)
4. Supply (V+)

*Connector **C1/C2**: DEUTSCH DTM04-2P*

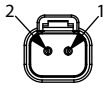

Pin	Assignment	Alternative	Pin	Assignment
1	Supply	OR	1	Ground
2	Ground		2	Supply

Please contact Danfoss representative for specific installation drawings.

EDC with CCO and ASNSR, Options H8 and H9 (12/24 V)

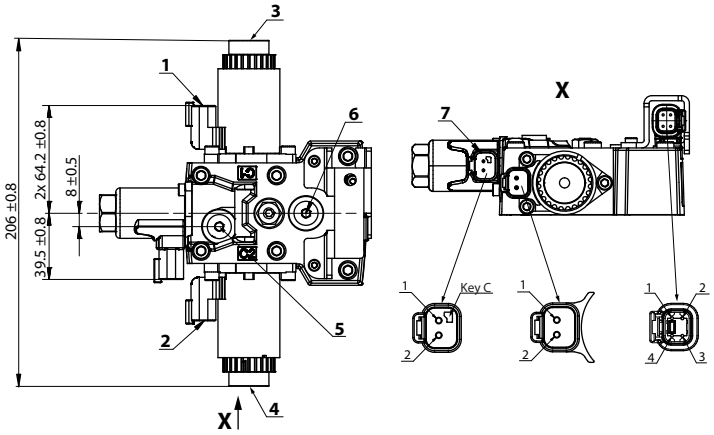

1. Control solenoid connector **C1** DEUTSCH DT04-2P, paint free
2. Control solenoid connector **C2** DEUTSCH DT04-2P, paint free
3. Control Manual OverRide **C1**
4. Control Manual OverRide **C2**
5. Case gauge port **M14** per ISO 1926-1: $^{7}/_{16}$–20
6. Brake gauge port **X7** per ISO 1926-1: $^{7}/_{16}$–20
7. Control-Cut-Off with C-key connector **C4** DEUTSCH DT04-2P, paint free

Depressing the plunger mechanically moves the control spool. Actuation allows full stroke pump response as per coil and rotation dependent control logic.

Connector DEUTSCH, 4-pin

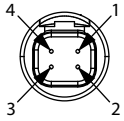

Angle sensor connector S2: DEUTSCH DTM04-4P

1. Ground (GND)
2. Not connected
3. Output signal 1 (SIG 1)
4. Supply (V+)

Connectors C1/C2/C4: DEUTSCH DTM04-2P

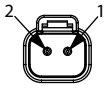

Pin	Assignment	Alternative	Pin	Assignment
1	Supply	OR	1	Ground
2	Ground		2	Supply

Please contact Danfoss representative for specific installation drawings.

MDC Option: M1

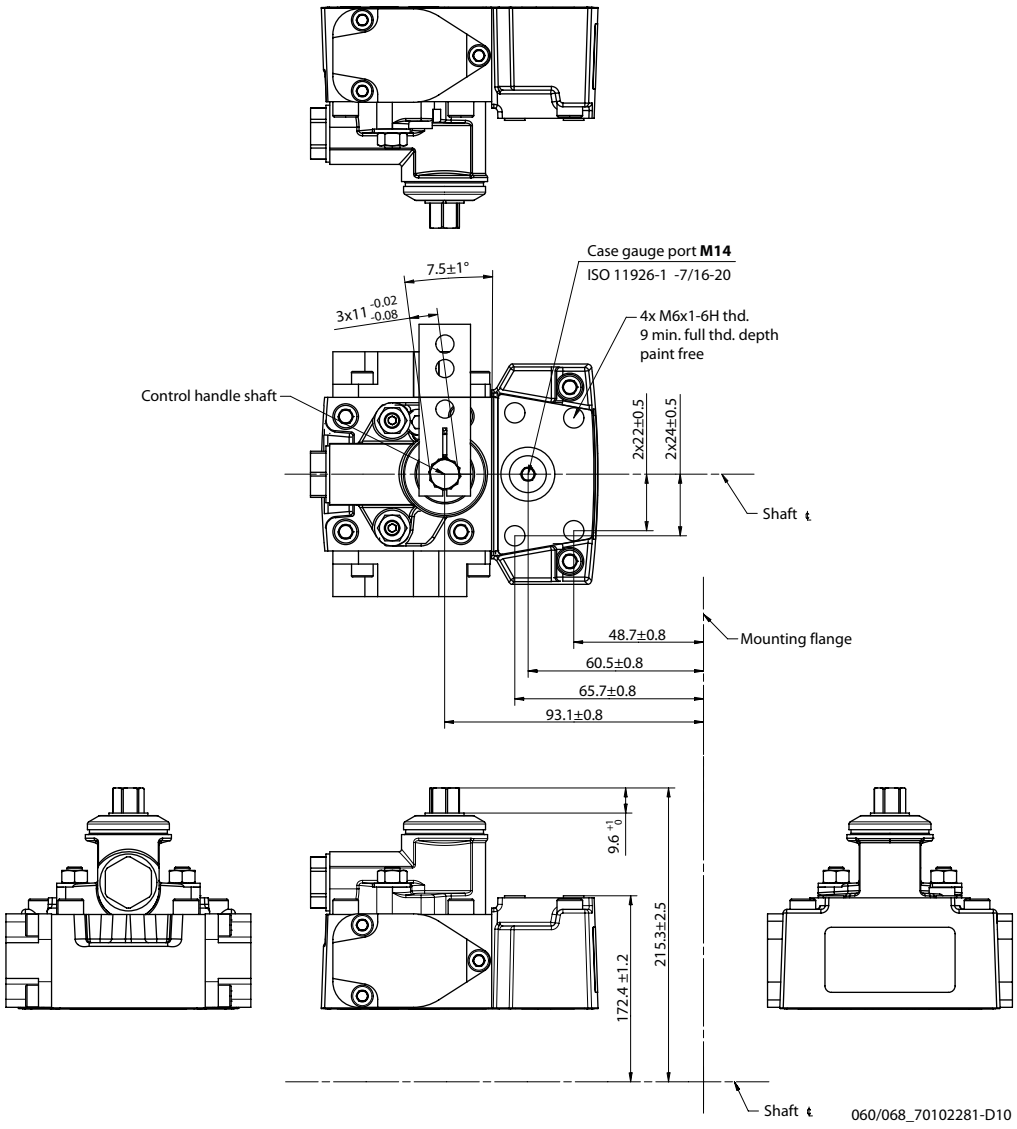

Connector DEUTSCH, 2-pin

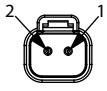

Pin	Assignment	Alternative	Pin	Assignment
1	Supply	OR	1	Ground
2	Ground		2	Supply

Please contact Danfoss representative for specific installation drawings.

MDC with Neutral Start Switch Option: M2

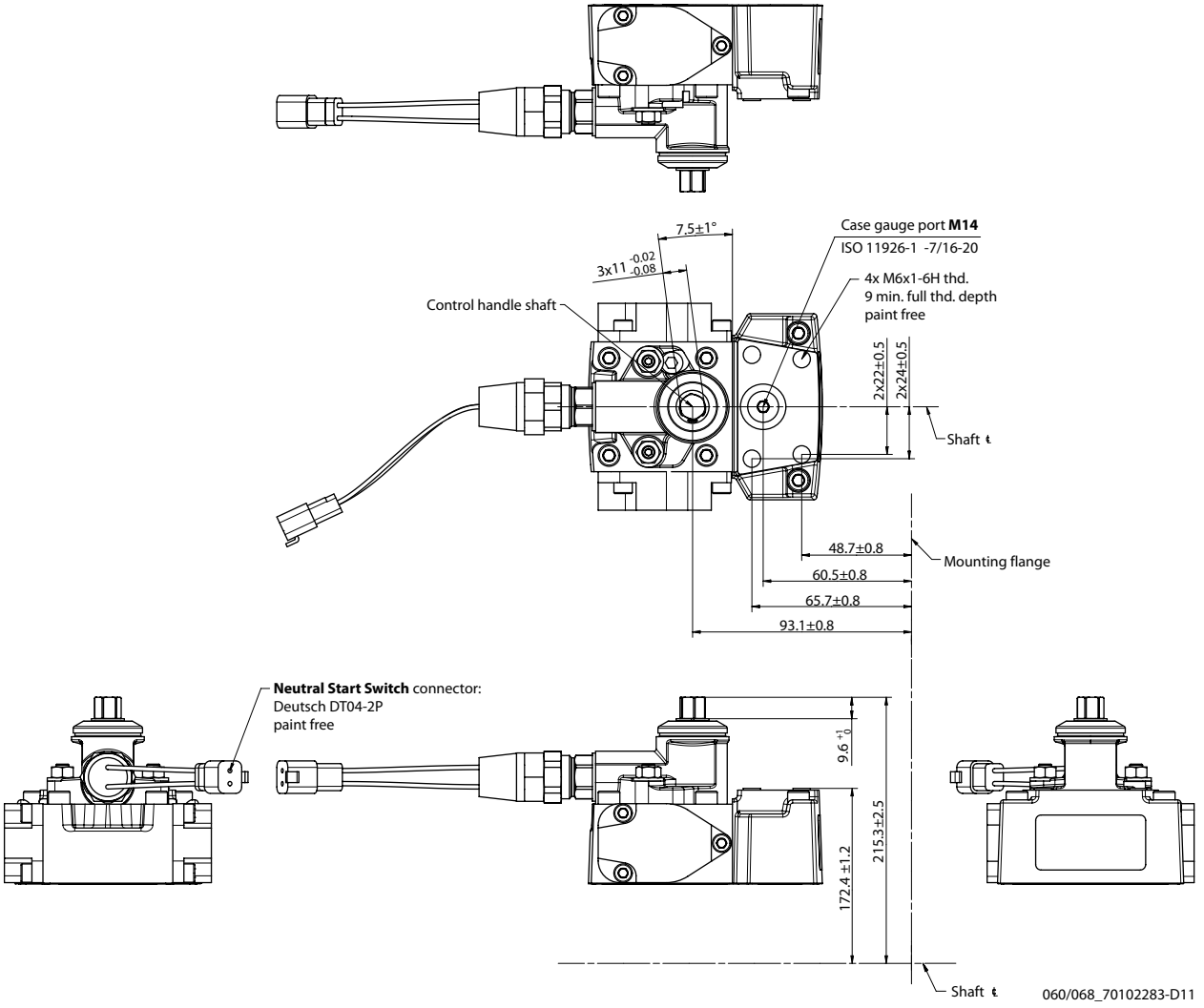

Connector DEUTSCH, 2-pin

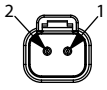

Pin	Assignment	Alternative	Pin	Assignment
1	Supply	OR	1	Ground
2	Ground		2	Supply

Please contact Danfoss representative for specific installation drawings.

MDC with CCO, Options: M3, M4

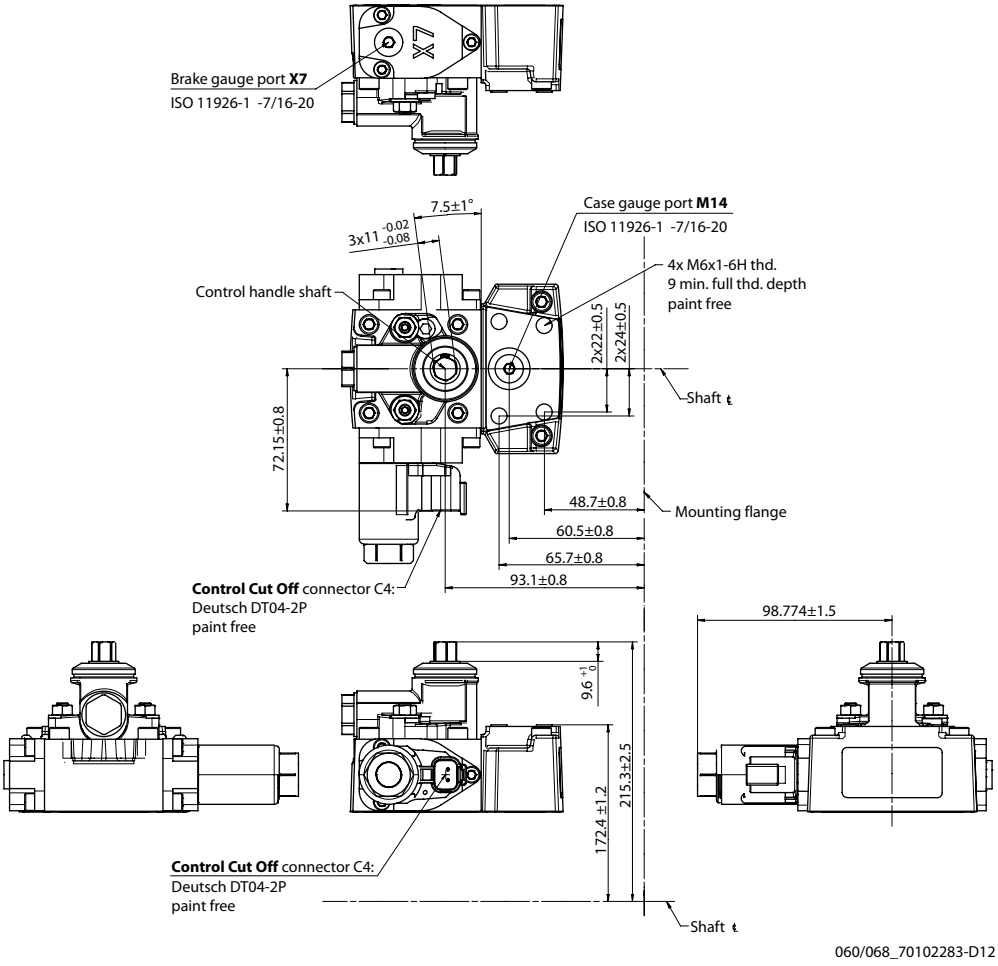

Connector DEUTSCH, 2-pin

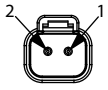

Pin	Assignment	Alternative	Pin	Assignment
1	Supply	OR	1	Ground
2	Ground		2	Supply

Please contact Danfoss representative for specific installation drawings.

MDC with NSS and CCO Options: M5, M6

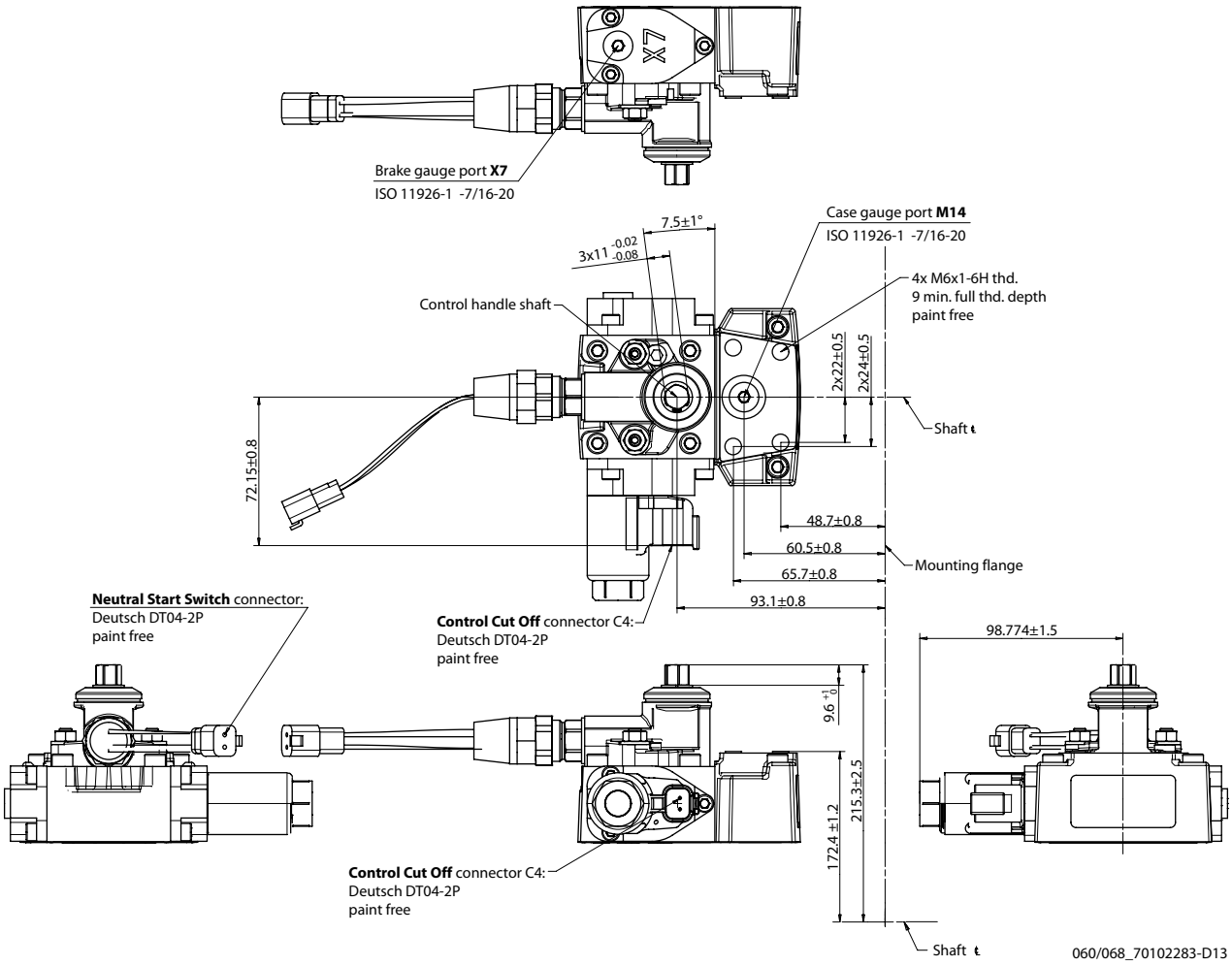

Connector DEUTSCH, 2-pin

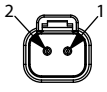

Pin	Assignment	Alternative	Pin	Assignment
1	Supply	OR	1	Ground
2	Ground		2	Supply

Please contact Danfoss representative for specific installation drawings.

H1P HDC, Options: T1, T2

Dimensions in mm

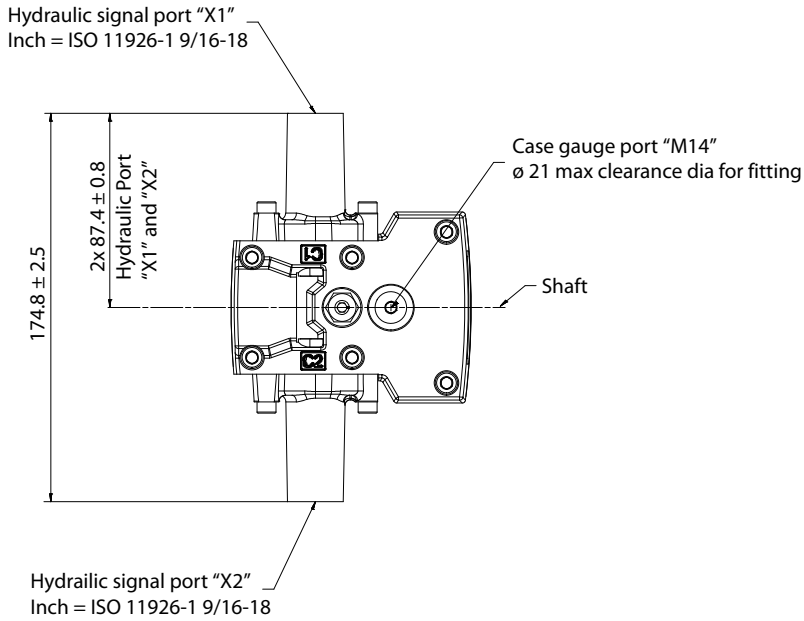

NFPE with MOR, CCO, ASNSR, Options: N3, N4 (12/24 V)

Non-Feedback Proportional Electric control with Control-Cut-Off valve with key C, Manual Over Ride and Angle Sensor, options N3 (12 V) and N4 (24 V).

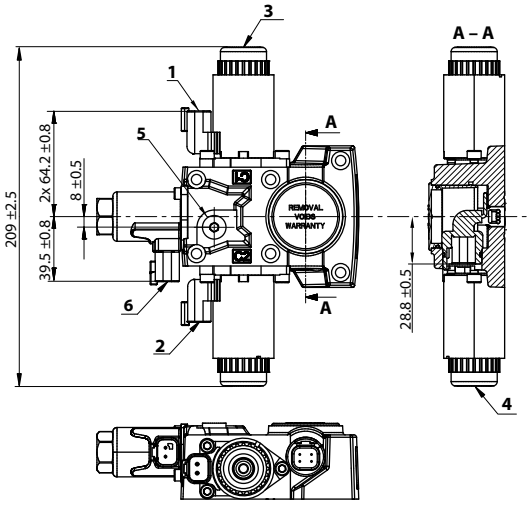

1. Control solenoid connector **C1** DEUTSCH DT04-2P, paint free
2. Control solenoid connector **C2** DEUTSCH DT04-2P, paint free
3. Control Manual OverRide **C1**
4. Control Manual OverRide **C2**
5. Case gauge port **M14** per ISO 1926-1: $^{7}/_{16}$–20
6. Control-Cut-Off with C-key connector **C4** DEUTSCH DT04-2P, paint free

Depressing the plunger mechanically moves the control spool. Actuation allows full stroke pump response as per coil and rotation dependent control logic.

Connector DEUTSCH, 4-pin

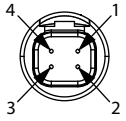

Pin/assignment:
1. Ground (GND)
2. Output Signal 2 (SIG2) – Secondary (redundant)
3. Output signal 1 (SIG 1)
4. Supply (V+)

*Control solenoid connectors **C1/C2/C4** DEUTSCH DTM04-2P pin/assignment*

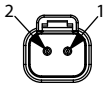

Pin	Assignment	Alternative	Pin	Assignment
1	Supply	OR	1	Ground
2	Ground		2	Supply

Please contact Danfoss representative for specific installation drawings.

NFPE with MOR and ASNSR, Options: N5, N6 (12/24 V)

Non-Feedback Proportional Electric control with Manual Over Ride and Angle Sensor, options N5 (12 V) and N6 (24 V).

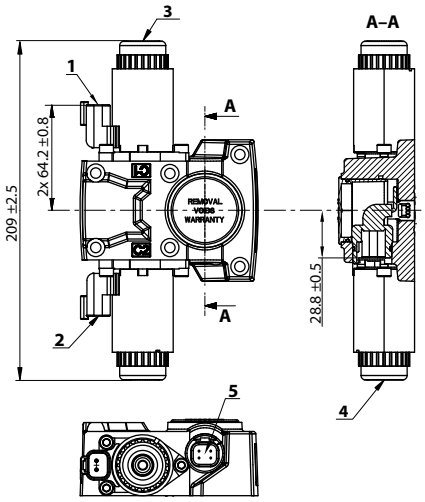

1. Control solenoid connector **C1** DEUTSCH DT04-2P, paint free
2. Control solenoid connector **C2** DEUTSCH DT04-2P, paint free
3. Control Manual OverRide **C1**
4. Control Manual OverRide **C2**
5. Angle sensor connector **S2** DEUTSCH DT04-4P, paint free

Connector DEUTSCH, 4-pin

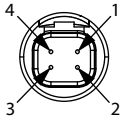

Pin/assignment:
1. Ground (GND)
2. Output Signal 2 (SIG2) – Secondary (redundant)
3. Output signal 1 (SIG 1)
4. Supply (V+)

Control solenoid connectors C1/C2 DEUTSCH 2-pin/assignment

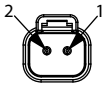

Pin	Assignment	Alternative	Pin	Assignment
1	Supply	OR	1	Ground
2	Ground		2	Supply

Please contact Danfoss representative for specific installation drawings.

NFPE with MOR and CCO, Options: N7, N8 (12/24 V)

Non Feedback Proportional Electric control with Manual Over Ride and Control-Cut-Off valve key C, options N7 (12 V) and N8 (24 V).

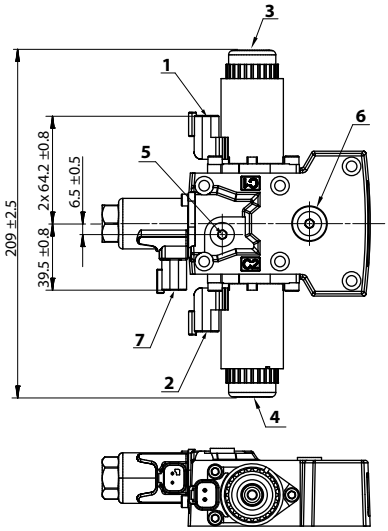

1. Control solenoid connector **C1** DEUTSCH DT04-2P, paint free
2. Control solenoid connector **C2** DEUTSCH DT04-2P, paint free
3. Control Manual OverRide **C1**
4. Control Manual OverRide **C2**
5. Brake gauge port **X7** per ISO 1926-1: $^{7}/_{16}$–20
6. Case gauge port **M14** per ISO 1926-1: $^{7}/_{16}$–20
7. Control-Cut-Off with C-key connector **C4** DEUTSCH DT04-2P, paint free

Depressing the plunger mechanically moves the control spool. Actuation allows full stroke pump response as per coil and rotation dependent control logic.

Connector DEUTSCH, 4-pin

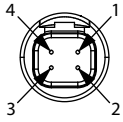

Pin/assignment:
1. Ground (GND)
2. Output Signal 2 (SIG2) – Secondary (redundant)
3. Output signal 1 (SIG 1)
4. Supply (V+)

*Control solenoid connectors **C1/C2** DEUTSCH DTM04-2P pin assignment*

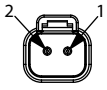

Pin	Assignment	Alternative	Pin	Assignment
1	Supply	OR	1	Ground
2	Ground		2	Supply

Please contact Danfoss representative for specific installation drawings.

NFPE with MOR, Options: N1, N2 (12/24 V)

Non-Feedback Proportional Electric control with Manual Over Ride options N1 (12 V) and N2 (24 V).

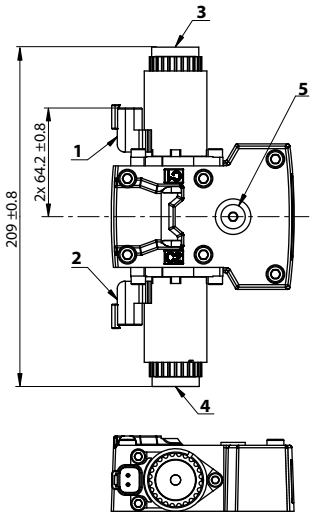

1. Control solenoid connector **C1** DEUTSCH DT04-2P, paint free
2. Control solenoid connector **C2** DEUTSCH DT04-2P, paint free
3. Control Manual OverRide **C1**
4. Control Manual OverRide **C2**
5. Case gauge port **M14** per ISO 1926-1: $^{7}/_{16}$–20

*Control solenoid connectors **C1/C2** DEUTSCH DTM04-2P pin/assignment*

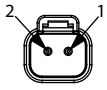

Pin	Assignment	Alternative	Pin	Assignment
1	Supply	OR	1	Ground
2	Ground		2	Supply

Please contact Danfoss representative for specific installation drawings.

HLC Options V1 and V2 (12/24 V)

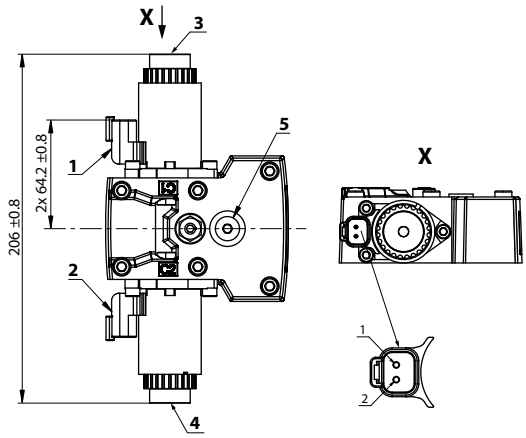

1. Control solenoid connector **C1** DEUTSCH DT04-2P, paint free
2. Control solenoid connector **C2** DEUTSCH DT04-2P, paint free
3. Control Manual OverRide **C1**
4. Control Manual OverRide **C2**
5. Case gauge port **M14** per ISO 1926-1: $^{7}/_{16}$–20

Pin	Assignment	Alternative	Pin	Assignment
1	Supply	OR	1	Ground
2	Ground		2	Supply

Please contact Danfoss representative for specific installation drawings.

HLC with ASNSR, Options: V3 and V4 (12/24 V)

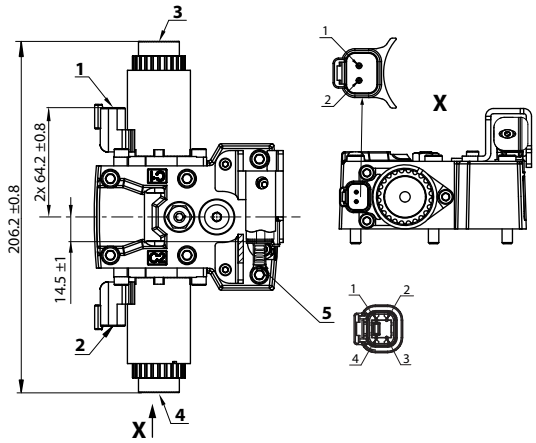

1. Control solenoid connector **C1** DEUTSCH DT04-2P, paint free
2. Control solenoid connector **C2** DEUTSCH DT04-2P, paint free
3. Control Manual OverRide **C1**
4. Control Manual OverRide **C2**
5. Angle sensor connector **S2** DEUTSCH DT04-4P, paint free

Connector DEUTSCH, 4-pin

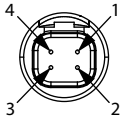

4-pin assignment:
1. Ground (GND)
2. Not connected
3. Output signal 1 (SIG 1)
4. Supply (V+)

*Connector **C1/C2**: DEUTSCH DTM04-2P*

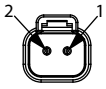

Pin	Assignment	Alternative	Pin	Assignment
1	Supply	OR	1	Ground
2	Ground		2	Supply

Please contact Danfoss representative for specific installation drawings.

FDC Options: F1, F2 (12/24V)

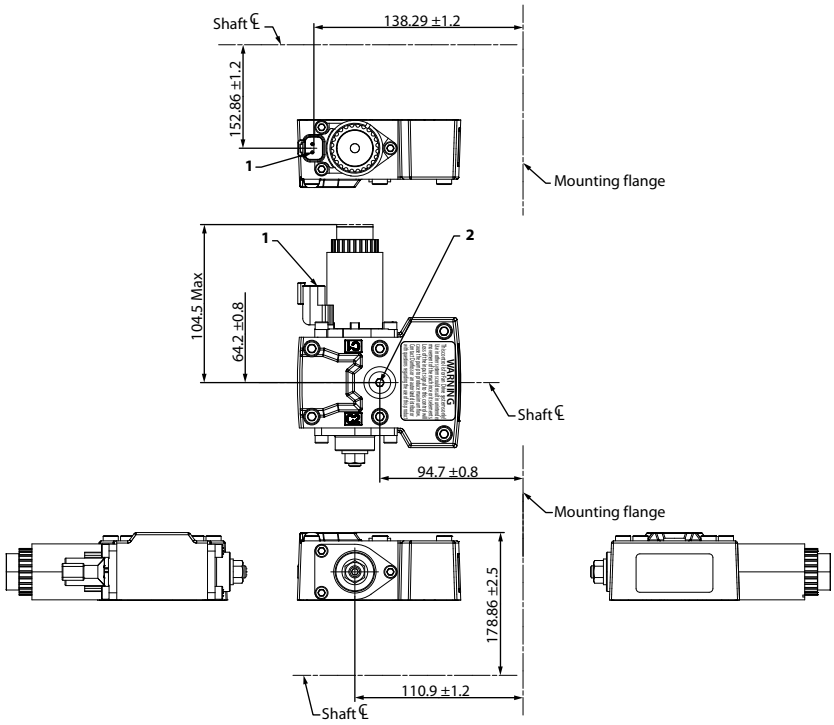

1. Control solenoid connector **C1** DEUTSCH DT04-2P, paint free
2. Case gauge port **M14** per ISO 1926-1: $^{7}/_{16}$–20

Control solenoid connectors DEUTSCH, 2-pin assignment

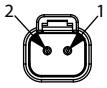

Pin	Assignment	Alternative	Pin	Assignment
1	Supply	OR	1	Ground
2	Ground		2	Supply

Please contact Danfoss representative for specific installation drawings.

Automotive control (AC)

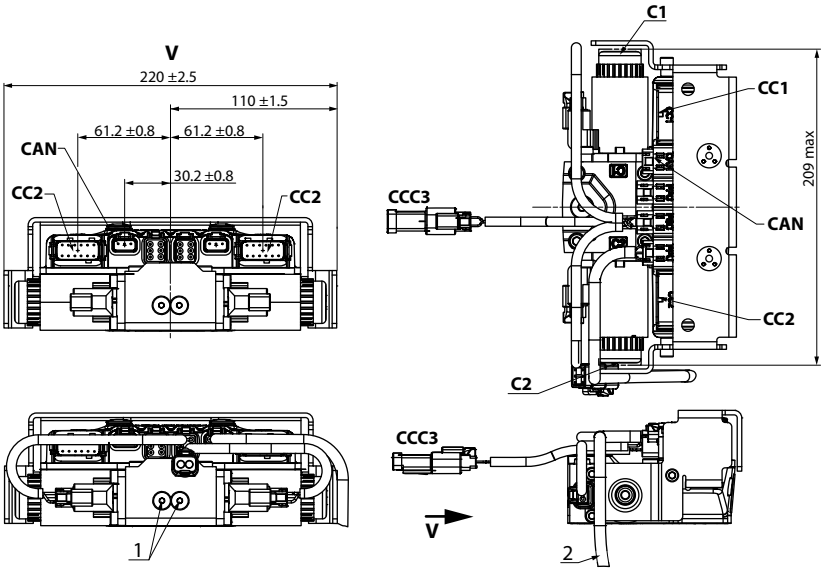

1 Plug removing can cause contamination issues

2 PPU wire harness is factory installed to speed sensor

Connectors description

Port	Description
C1 and C2	**1.** Control manual override **C1** **2.** Control Manual Override **C2**
CC1	Port A control connector DEUTSCH DTM04-12P; paint free
CC2	Port B control connector DEUTSCH DTM04-12P; paint free
CC3	Control connector DEUTSCH DT06-2S; paint free; For using connector, the plug may be removed.
CAN	Control connector DEUTSCH DTM04-3P; paint free; For using connector, the plug may be removed.

Please contact Danfoss representative for specific installation drawings.

AC connectors dimensions

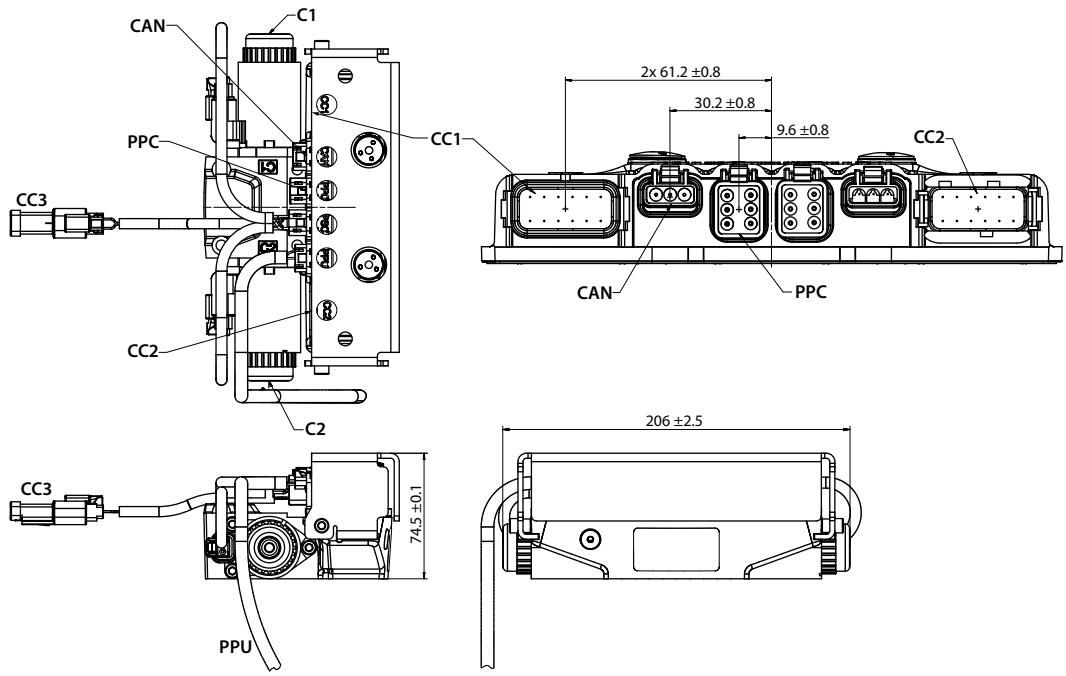

PPU wire harness is factory installed to speed sensor.

CC3

Connector DEUTSCH, 2-pin

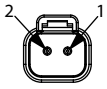

1. Digital output A1 (+)
2. Digital output A2 (-)

CAN

Connector DEUTSCH, 3-pin

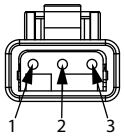

1. CAN High
2. CAN Low
3. CAN Shield

PPC

Connector DEUTSCH, 6-pin

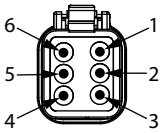

1. Sensor A (+)
2. Analog input A
3. Sensor A (-)
4. Sensor B (-)
5. Analog input B
6. Sensor B (+)

Connector DEUTSCH, 12-pin

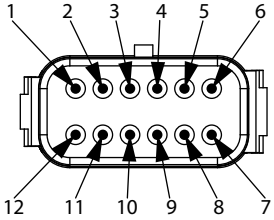

CC1

1. Battery (-)
2. Battery (+)
3. Sensor (+)
4. Sensor (-)
5. Motor rpm input (frequency)
6. Forward input (digital)
7. Reverse input (digital)
8. Sensor (+)
9. Sensor (-)
10. Drive pedal input (analog – nominal)
11. Drive pedal input (analog – red)
12. Neural input (digital)

CC2

1. Inch input (analog – red)
2. Mode switch B input (digital – nominal)
3. Motor prop/PCOR driver
4. Motor direction input (analog)
5. Sensor (+)
6. Sensor (-)
7. Inch input (analog – nominal)
8. Motor BPD driver
9. Digital output B2 (-)
10. Digital output B1 (+)
11. Mode switch A input (digital)
12. Mode switch B input (digital – red)

Filtration

H1P 89/100 Suction Filtration Option L

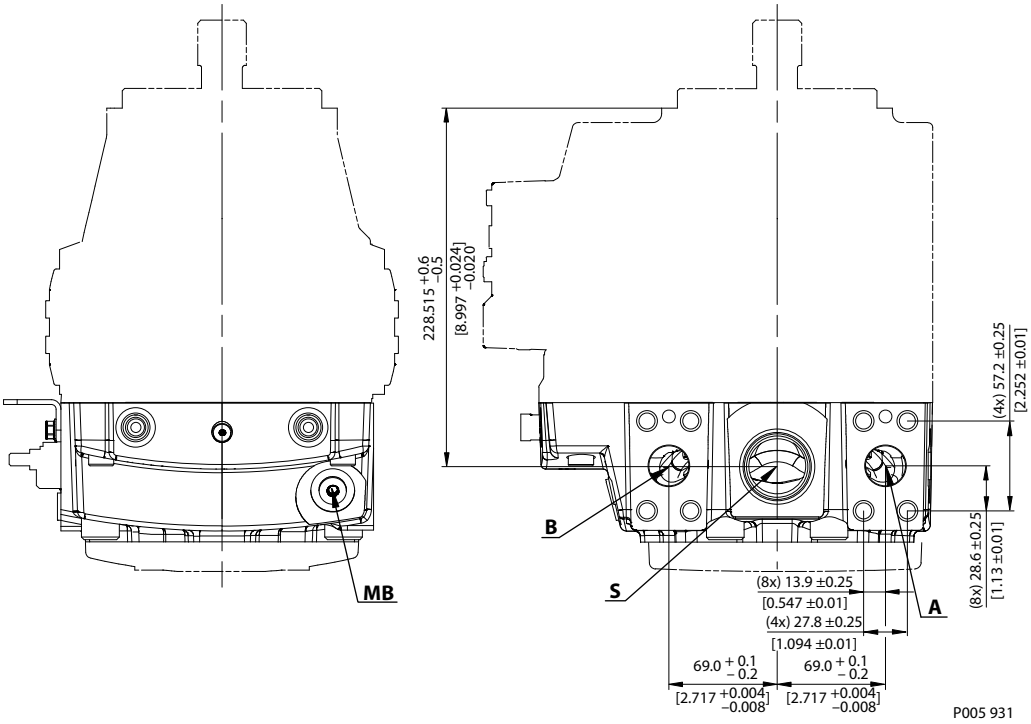

A, B	System ports; 450 bar, split flange boss per ISO 6162
MB	System B gauge port
S	Charge inlet port per ISO 11926-1: $1\frac{5}{8}$–12

Please contact Danfoss representative for specific installation drawings.

H1P 89/100 Remote Full Flow Charge Pressure Filtration Option P

Remote Filtration for end cap option F5 (SAE-C PTO)

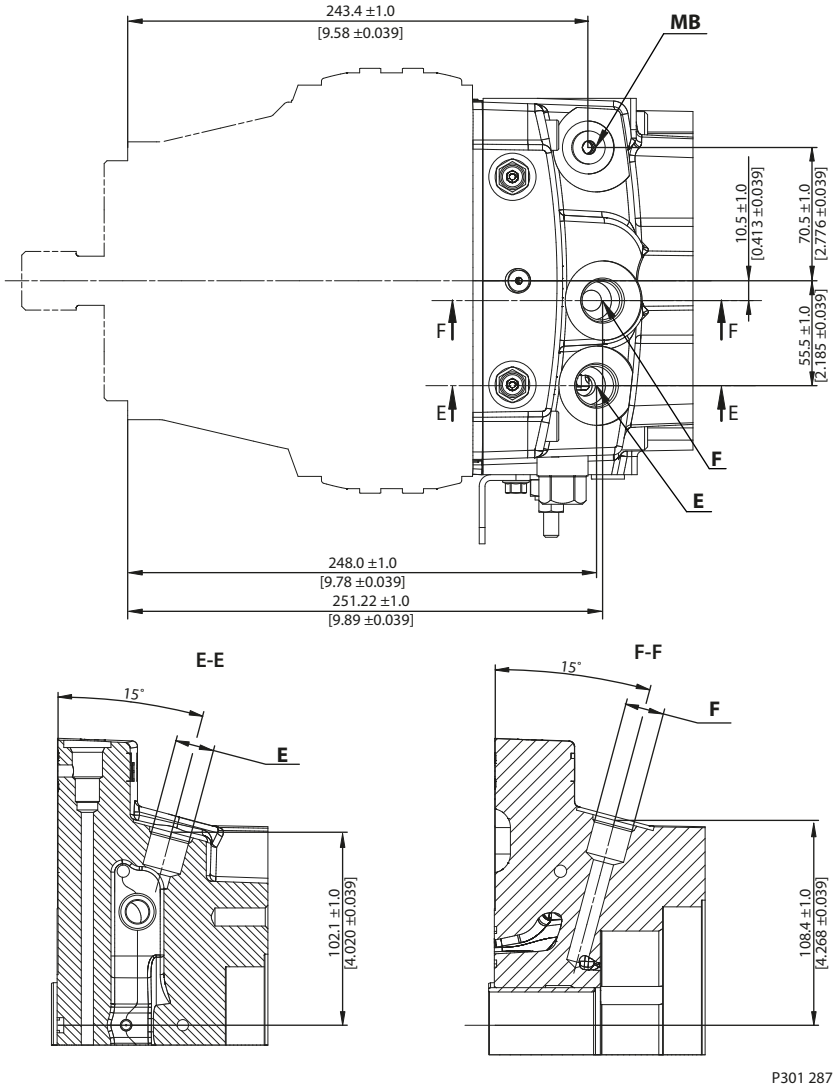

MB	System B gauge port per ISO 11926-1
F	Charge filtration port to filter
E	Charge filtration port from filter

Please contact Danfoss representative for specific installation drawings.

Integral Full Flow Charge Pressure Filtration, Option M

Integral full flow charge pressure filtration with filter bypass sensor, option M, for end cap option D3

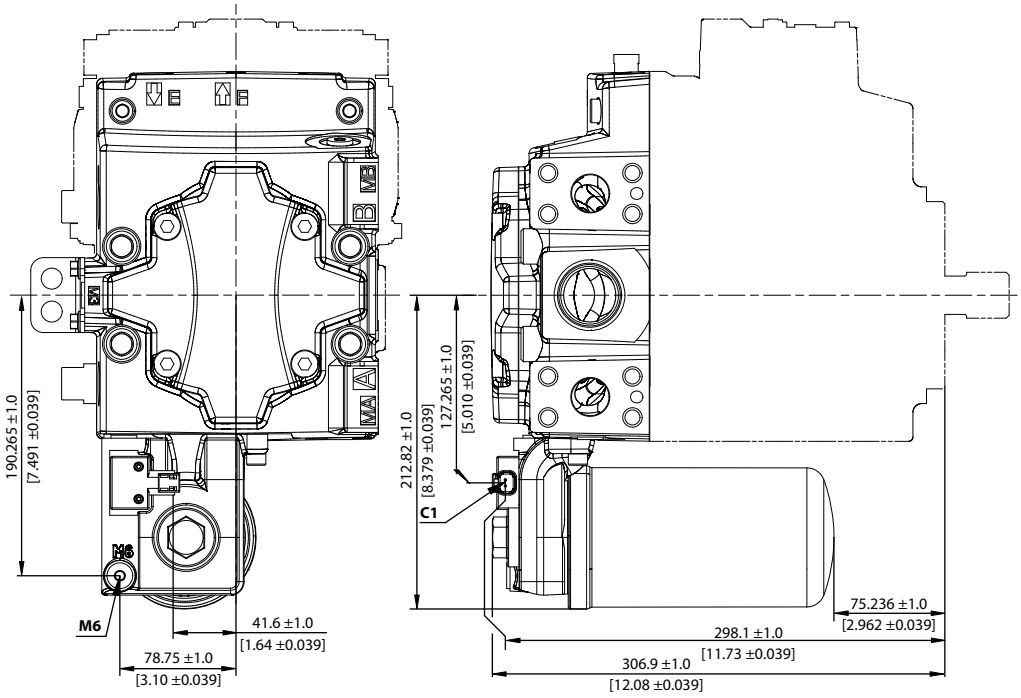

Integral charge filtration with filter bypass sensor, option M, for end cap option F4 (SAE-C PTO)

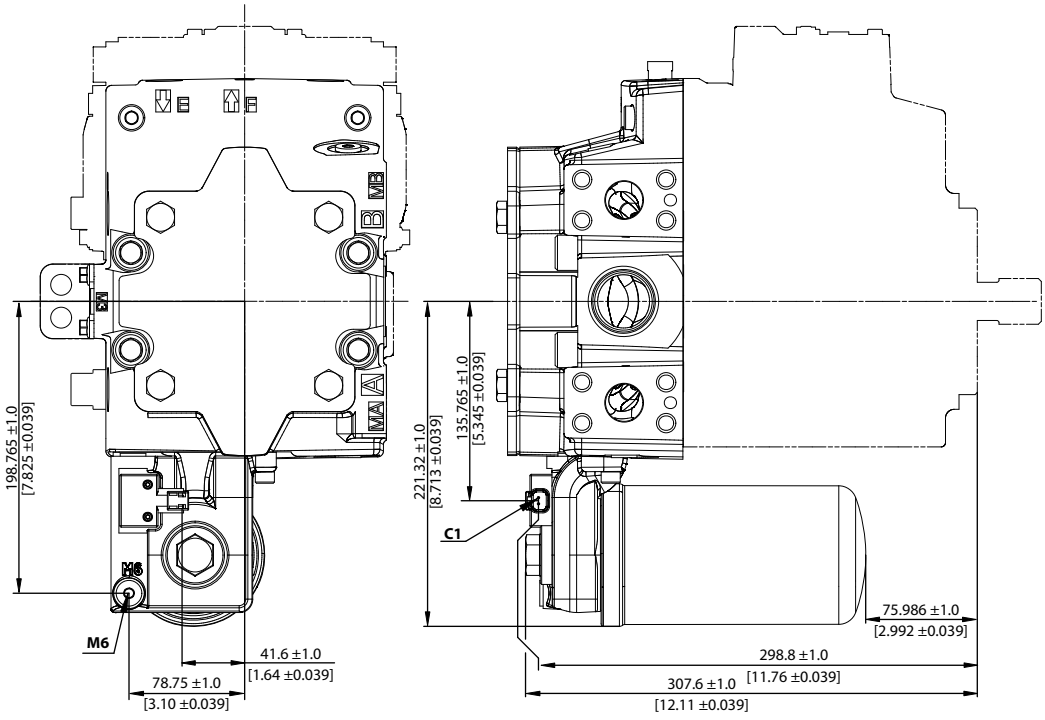

External Full Flow Charge Pressure Filtration, Option S

External filtration, option S for end cap options D8 or F5

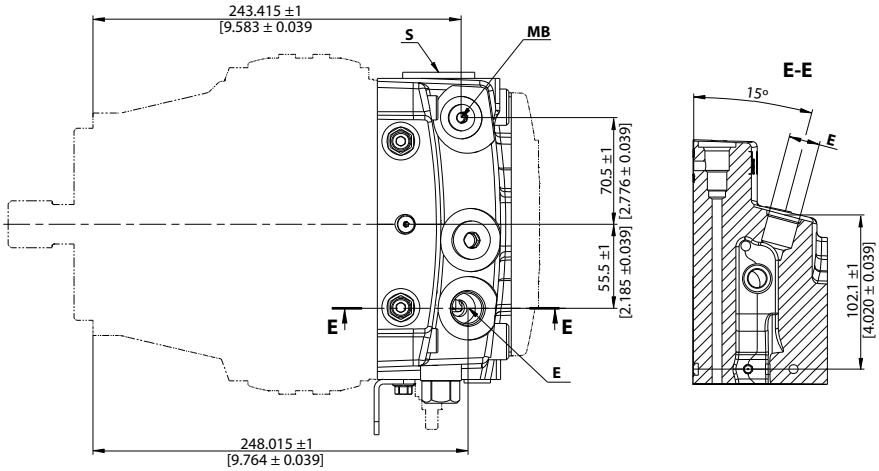

E	Charge filtration ports per ISO 11926-1: $^{7}/_{8}$–14 from filter
MB	System gauge port per ISO 11926-1: $^{9}/_{16}$–18
S	Charge inlet port per ISO 11926-1: $1^{5}/_{8}$–12

Please contact Danfoss representative for specific installation drawings.

Hydro-Gear
www.hydro-gear.com

Daikin-Sauer-Danfoss
www.daikin-sauer-danfoss.com

Explore our solutions at *danfoss.com*.

Additional product literature is available at *powersource.danfoss.com*.

Danfoss
Power Solutions (US) Company
2800 East 13th Street
Ames, IA 50010, USA
Phone: +1 515 239 6000

Danfoss
Power Solutions GmbH & Co. OHG
Krokamp 35
D-24539 Neumünster, Germany
Phone: +49 4321 871 0

Danfoss
Power Solutions ApS
Nordborgvej 81
DK-6430 Nordborg, Denmark
Phone: +45 7488 2222

Danfoss
Power Solutions Trading
(Shanghai) Co., Ltd.
Building #22, No. 1000 Jin Hai Rd
Jin Qiao, Pudong New District
Shanghai, China 201206
Phone: +86 21 2080 6201

Danfoss can accept no responsibility for possible errors in catalogues, brochures and other printed material. Danfoss reserves the right to alter its products without notice. This also applies to products already on order provided that such alterations can be made without subsequent changes being necessary in specifications already agreed.
All trademarks in this material are property of the respective companies. Danfoss and the Danfoss logotype are trademarks of Danfoss A/S. All rights reserved.

© Danfoss A/S, 2026

BC152886482765en-001503