Design Guide

iC7 Series Air-cooled System Modules

Non-Regenerative Frond-End, Active Front-End, Inverter, and Grid Converter Modules



Explore our solutions
drives.danfoss.com

Contents

1 Introduction

1.1 Purpose of this Design Guide 11
1.2 Additional Resources 11
1.3 Planning and Design Support Materials 11
1.3.1 Overview 11
1.3.2 Locating Support Information 12
1.4 Version History 12
1.5 Abbreviations 12
1.6 Recommended Disposal 13

2 Safety

2.1 Safety 14
2.2 Safety Symbols 14
2.3 General Safety Considerations 14
2.4 Target Group and Necessary Qualifications 15

3 Danfoss iC7 Series

3.1 Overview of iC7 Series 16

4 Overview of the iC7 Series Air-cooled System Modules

4.1 System Modules 17
4.2 Contents of the Delivery 18
4.3 Checking the Delivery 19
4.4 Description of the Frame Designation 19
4.5 Weights of the System Modules 19
4.6 Lifting the Product 20
4.7 Common DC-bus Drive System 22
4.8 Control System of the System Modules 23
4.9 Description of the Model Code 23
4.10 Options 25
4.11 Accessories 27
4.12 Labels on the System Module 28
4.13 Labels on Other Components 29

4.14 Product Label 30

5 Mechanical Installation Considerations

5.1 Storing the System Module 32
5.2 Requirements for the Cabinet 32
5.3 Installation Direction 32
5.4 Installation Requirements 33
5.5 Installing System Modules into Cabinet 33
5.6 Installing NFE Modules with Integration Units into Cabinet 35
5.7 Installing Inverter Modules with Integration Units into Cabinet 37
5.8 Installing LCL Filters and AFE Modules with Integration Units into Cabinet 40
5.9 Cooling Requirements 43
5.9.1 General Cooling Requirements 43
5.9.2 The Quantity of Cooling Air 43
5.9.3 Cooling of System Modules 43
5.9.4 Cooling of System Modules with Integration Units 44
5.9.5 Preventing the Recirculation of the Cooling Air 45

6 Electrical Installation Considerations

6.1 Cable Requirements 47
6.2 Grounding Principles 47
6.3 Grounding the Products 48
6.4 Installing an NFE and an Inverter Module in C3 Environment 48
6.5 Prerequisites for Cable Installation 49
6.6 Recommended Installation of Motor Cables 50
6.7 Cable Requirements for the LCL Filter Fan Supply 51
6.8 Connecting the LCL Filter Fan Supply 52
6.9 Installation in an IT System 53
6.9.1 Installation of NFE Modules in an Impedance-grounded (IT) System 53
6.9.2 Installation of AFE Modules in an Impedance-grounded (IT) System 54
6.9.3 Changing the EMC Protection Level of the NFE Module in an IT System 55
6.9.4 Changing the EMC Protection Level of the AFE Module in an IT System 56
6.10 Fuses of the Drive System 58
6.11 Guidelines for DC Connections of System Modules 58
6.12 Terminals of the System Modules 62

Danfoss Drives Oy © 2026.09

6.13 Auxiliary Power Connection of the Power Unit 62
6.14 AuxBus Communication 63
6.14.1 Usage of AuxBus 63
6.14.2 AuxBus Cable Requirements 64
6.14.3 AuxBus Grounding Principles 65
6.14.4 AuxBus Terminals of the LCL Filter and the Integration Unit 66

7 Options and Accessories for the Air-cooled System Modules

7.1 dU/dt Filter 67
7.2 Common-mode Filter 68
7.3 LCL Filter and LC Filter 69
7.4 Selection of the LCL Filter 69
7.5 The Pre-charging Unit 71

8 Control Unit

8.1 Modular Control Unit 74
8.2 Control Board 75
8.3 Definitions of the Indicator Lights on the Control Board 76
8.4 Control Board Connections 76
8.5 Star Coupler Board 78
8.6 Definitions of the Indicator Lights on the Star Coupler Board 80
8.7 Star Coupler Board Connections 81
8.8 I/O and Relay Option (OC7C1) Connections 81
8.9 I/O and Relay Option Interface 84
8.9.1 Analog Inputs 84
8.9.2 Analog Outputs 84
8.9.3 Digital Inputs 85
8.9.4 Digital Outputs 85
8.9.5 Relay Outputs 86
8.9.6 Analog Reference Voltage Output 86
8.9.7 24 V DC Voltage Output 87
8.9.8 Thermistor Input 87
8.10 Assembling the Control Unit Mounting Plates 87
8.11 Attaching the Control Unit Mounting Plates 88
8.12 Installing the Control Unit 89

8.13 Installing Boards to the Modular Control Unit 89
8.14 Connecting the Fieldbus Cable and the Fiber Cables 90
8.15 Installing the Control Cables into the Control Terminals 90
8.16 Control Panel Mounting Kits and Cables 91
8.17 Fiber Cable Requirements 92

9 Maintenance

9.1 Preventive Maintenance Recommendations 93
9.2 Using the Product Modified Label 95
9.3 Replacing the RTC Battery 95
9.4 Removing the Fan Assembly 96
9.5 Installing MyDrive® Insight 98
9.6 Downloading the Software without the Mains Supply 98
9.7 Recommissioning of the Drive 98

10 Specifications

10.1 Tightening Torques 100
10.2 Dimensions 101
10.2.1 Dimensions of the NFE Module, NR11 with Short Integration Unit (+AE01) 101
10.2.2 Dimensions of the NFE Module, NR11 with Standard Integration Unit (+AE10) 102
10.2.3 Dimensions of the AFE Module, AR10 103
10.2.4 Dimensions of the AFE Module, AR10, with the Short Integration Unit (+AE01) 104
10.2.5 Dimensions of the AFE Module, AR11 105
10.2.6 Dimensions of the AFE Module, AR11, with the Short Integration Unit (+AE01) 106
10.2.7 Dimensions of the LCL Filter, LCL10, and the AFE Module, AR10 107
10.2.8 Dimensions of the LCL Filter, LCL10, and the AFE Module, AR10, with the Short Integration Unit (+AE01) 108
10.2.9 Dimensions of the LCL Filter, LCL11, and the AFE Module, AR11, with the Standard Integration Unit (+AE10) 109
10.2.10 Dimensions of the LCL Filter, LCL11, and the AFE Module, AR11, with the Short Integration Unit (+AE01) 110
10.2.11 Dimensions of the LCL Filter, LCL11W, and the AFE Module, AR11, with the Standard Integration Unit (+AE10) 111
10.2.12 Dimensions of the LCL Filter, LCL11W, and the AFE Module, AR11, with the Short Integration Unit (+AE01) 112
10.2.13 Dimensions of the LCL Filter, LCL10 (514 A) and LCL11 (816 A) 113
10.2.14 Dimensions of the LCL Filter, LCL11W and LC11W (820 A) 114
10.2.15 Dimensions of the Inverter Module, IM10 115
10.2.16 Dimensions of the Inverter Module, IM11 116
10.2.17 Dimensions of the Inverter Module, IR10 117

Danfoss Drives Oy © 2026.09

10.2.18 Dimensions of the Inverter Module, IR10 with Short Integration Unit (+AE01) 118
10.2.19 Dimensions of the Inverter Module, IR11 119
10.2.20 Dimensions of the Inverter Module, IR11 with Short Integration Unit (+AE01) 120
10.2.21 Dimensions of the Short Integration Unit for AFE Module (+AE01) 121
10.2.22 Dimensions of the Standard Integration Unit for AFE Module (+AE10) 122
10.2.23 Dimensions of the Short Integration Unit for Inverter Module (+AE01) 123
10.2.24 Dimensions of the Standard Integration Unit for Inverter Module (+AE10) 124
10.2.25 Dimensions for DC Fuses, NR11 with Short Integration Unit 126
10.2.26 Dimensions for DC Fuses, NR11 with Standard Integration Unit 126
10.2.27 Dimensions for DC Fuses, AM10 and IM10 127
10.2.28 Dimensions for DC Fuses, AM11 and IM11 128
10.2.29 Dimensions for DC Fuses, AR10 and IR10 129
10.2.30 Dimensions for DC Fuses, AR11 and IR11 130
10.2.31 Dimensions of the Control Unit 131
10.2.32 Dimensions of the Control Unit Mounting Plate 132
10.2.33 Dimensions of the Option Connector 133
10.2.34 Dimensions of the Control Board 134
10.2.35 Dimensions of the I/O and Relay Option 135
10.2.36 Dimensions of an Option Board 136
10.2.37 Dimensions of the 4-port Star Coupler Board 137
10.2.38 Dimensions of the 8-port Star Coupler Board 138
10.2.39 Dimensions of the 16-port Star Coupler Board 139
10.2.40 Dimensions of the Pre-charging Unit, IEC 140
10.2.41 Dimensions of the Pre-charging Unit, UL 141
10.3 Wiring Diagrams 141
10.3.1 Wiring Diagram, NFE Modules 141
10.3.2 Wiring Diagram, NFE Modules with Parallel Power Units 142
10.3.3 Wiring Diagram, AFE Modules 143
10.3.4 Wiring Diagram, AFE Modules and LC Filter 143
10.3.5 Wiring Diagram, AFE Modules, LC Filter, and Transformer 144
10.3.6 Wiring Diagram, AFE Modules with Parallel Power Units 145
10.3.7 Wiring Diagram, AFE Modules with Parallel Power Units, LC Filters, and Transformers 146
10.3.8 Wiring Diagram, Inverter Modules 146
10.3.9 Wiring Diagram, Inverter Modules with Parallel Power Units 147
10.3.10 Pre-charging Wiring Diagram, AFE Modules 148
10.3.11 Pre-charging Control Wiring Diagrams 149

10.3.12 The Pre-charging Function 150
10.3.13 Wiring Diagrams of the +24 V Supply for the Control Unit 151
10.4 Cable Sizes 152
10.4.1 General Cable Size Information 152
10.4.2 Mains Cable Size Recommendations for NFE Modules, 380–500 V 153
10.4.3 Mains Cable Size Recommendations for AFE Modules, 380–500 V 154
10.4.4 Motor Cable Sizes Recommendation for Inverter Modules, 380–500 V 154
10.4.5 Motor Cable Size Recommendations for Inverter Modules with Integration Units, 380–500 V 155
10.4.6 Mains Cable Size Recommendations for NFE Modules, UL 480 V 156
10.4.7 Mains Cable Size Recommendations for AFE Modules, UL 480 V 157
10.4.8 Motor Cable Sizes Recommendation for Inverter Modules, UL 460 V 157
10.4.9 Motor Cable Size Recommendations for Inverter Modules with Integration Units, UL 460 V 158
10.4.10 Mains Cable Size Recommendations for NFE Modules, UL 600 V 159
10.4.11 Mains Cable Size Recommendations for AFE Modules, UL 600 V 160
10.4.12 Motor Cable Sizes Recommendation for Inverter Modules, UL 575 V 161
10.4.13 Motor Cable Sizes Recommendation for Inverter Modules with Integration Units, UL 575 V 162
10.4.14 Mains Cable Size Recommendations for NFE Modules, 525–690 V 163
10.4.15 Mains Cable Size Recommendations for AFE Modules, 525–690 V 163
10.4.16 Motor Cable Sizes Recommendation for Inverter Modules, 525–690 V 164
10.4.17 Motor Cable Sizes Recommendation for Inverter Modules with Integration Units, 525–690 V 165
10.5 Fuses 166
10.5.1 List of Fuse Size Information 166
10.5.2 AC Fuses for NFE, 380–500 V AC 166
10.5.3 DC Fuses for NFE, 465–740 V DC 167
10.5.4 AC Fuses for NFE, 525–690 V AC 167
10.5.5 DC Fuses for NFE, 640–1100 V DC 168
10.5.6 AC Fuses for AFE or GC, 380–500 V AC 168
10.5.7 DC Fuses for AFE or GC, 465–740 V DC 169
10.5.8 AC Fuses for AFE, 525–690 V AC 170
10.5.9 DC Fuses for AFE, 640–1100 V DC 171
10.5.10 DC Fuses for Inverter Modules, 465–740 V DC 172
10.5.11 DC Fuses for Inverter Modules, 640–1100 V DC 173
10.6 Current Ratings 174
10.6.1 General Current Rating Information 174
10.6.2 Current Ratings for NFE Module, 400 V AC 176

Danfoss Drives Oy © 2026.09

10.6.3 Current Ratings for NFE Module, UL 480 V AC 177
10.6.4 Current Ratings for NFE Module, 500 V AC 177
10.6.5 Current Ratings for NFE Module, 525 V AC 178
10.6.6 Current Ratings for NFE Module, UL 600 V AC 178
10.6.7 Current Ratings for NFE Module, 690 V AC 179
10.6.8 Current Ratings for Regenerative AFE Module, 400 V AC (465–650 V DC) 179
10.6.9 Current Ratings for Regenerative AFE Module, UL 480 V AC (650–740 V DC) 180
10.6.10 Current Ratings for Regenerative AFE Module, 500 V AC (650–740 V DC) 181
10.6.11 Current Ratings for Regenerative AFE Module, 525 V AC (640–900 V DC) 181
10.6.12 Current Ratings for Regenerative AFE Module, UL 600 V AC (640–980 V DC) 182
10.6.13 Current Ratings for Regenerative AFE Module, 690 V AC (690–1100 V DC) 183
10.6.14 Current Ratings for Low-harmonic AFE Module, 400 V AC (465–650 V DC) 184
10.6.15 Current Ratings for Low-harmonic AFE Module, UL 480 V AC (650–740 V DC) 185
10.6.16 Current Ratings for Low-harmonic AFE Module, 500 V AC (650–740 V DC) 186
10.6.17 Current Ratings for Low-harmonic AFE Module, 525 V AC (640–900 V DC) 186
10.6.18 Current Ratings for Low-harmonic AFE Module, UL 600 V AC (640–980 V DC) 187
10.6.19 Current Ratings for Low-harmonic AFE Module, 690 V AC (690–1100 V DC) 188
10.6.20 Current Ratings for Inverter Module, 400 V AC (465–650 V DC) 189
10.6.21 Current Ratings for Inverter Module, UL 460 V AC (650–740 V DC) 190
10.6.22 Current Ratings for Inverter Module, 500 V AC (650–740 V DC) 191
10.6.23 Current Ratings for Inverter Module, 525 V AC (640–900 V DC) 192
10.6.24 Current Ratings for Inverter Module, UL 575 V AC (640–980 V DC) 193
10.6.25 Current Ratings for Inverter Module, 690 V AC (690–1100 V DC) 194
10.6.26 Current Ratings for Grid Converter Module, 400 V AC (465–650 V DC) 195
10.6.27 Current Ratings for Grid Converter Module, 500 V AC (650–740 V DC) 196
10.7 Output Current Derating 197
10.7.1 Derating the Output Current, 380–500 V AC 197
10.7.2 Derating the Output Current, 525–690 V AC 198
10.8 Power Losses 199
10.8.1 General Power Loss Information 199
10.8.2 Power Losses of NFE Modules without Options, 380–500 V 199
10.8.3 Power Losses of NFE Modules without Options, 525–690 V 200
10.8.4 Power Losses of AFE Modules without Options, 380–440 V 200
10.8.5 Power Losses of AFE Modules without Options, 440–500 V 201
10.8.6 Power Losses of AFE Modules without Options, 525–690 V 202

10.8.7 Power Losses of LCL Filter at Drive Nominal Parameters, 380–500 V 203
10.8.8 Power Losses of LCL Filter at Drive Nominal Parameters, 525–690 V 204
10.8.9 Power Losses of Inverter Modules without Options, 380–440 V 204
10.8.10 Power Losses of Inverter Modules with dU/dt Filter, 150 m (492 ft) Motor Cables, 380–440 V 205
10.8.11 Power Losses of Inverter Modules without Options, 440–500 V 206
10.8.12 Power Losses of Inverter Modules with dU/dt Filter, 150 m (492 ft) Motor Cables, 440–500 V 207
10.8.13 Power Losses of Inverter Modules without Options, 525–690 V 208
10.8.14 Power Losses of Inverter Modules with dU/dt Filter, 150 m (492 ft) Motor Cables, 525-690 V 209
10.9 Technical Data 210

Danfoss Drives Oy © 2026.09

1 Introduction

1.1 Purpose of this Design Guide

This design guide is intended for qualified personnel, such as:

- Project and systems engineers.
- Design consultants.
- Application and product specialists.

The design guide provides technical information to understand the capabilities of the iC7 drives for integration into motor control and monitoring systems. Its purpose is to provide design considerations and planning data for integration of the drive into a system. It caters for selection of drives and options for a diversity of applications and installations. Reviewing the detailed product information in the design stage enables developing a well-conceived system with optimal functionality and efficiency.

This guide is targeted at a worldwide audience. Therefore, wherever occurring, both SI and imperial units are shown.

1.2 Additional Resources

Additional resources are available to help understand the features, and safely install and operate the iC7 products:

- Safety guides, which provide important safety information related to installing iC7 drives.
- Installation guides, which cover the mechanical and electrical installation of drives, or functional extension options.
- Operating guides, which include instructions for control options and other components for the drive.
- Application guides, which provide instructions on setting up the drive for a specific end use. Application guides for application software packages also provide an overview of the parameters and value ranges for operating the drives, configuration examples with recommended parameter settings, and troubleshooting steps.
- *Facts Worth Knowing about AC Drives*, available for download on www.danfoss.com.
- Other supplemental publications, drawings, and guides are available at www.danfoss.com.

Latest versions of Danfoss product guides are available for download at www.danfoss.com/en/service-and-support/documentation/.

1.3 Planning and Design Support Materials

1.3.1 Overview

Danfoss provides access to comprehensive product information that supports throughout the product lifecycle.

All iC7 series design guides, installation guides, safety guides, operating guides, and application guides are available for download at www.danfoss.com. It is also possible to order printed guides.

For each iC7 drive or power converter, 2D and 3D drawings, and wiring diagrams are available in standard file formats. EPLAN files with macros, technical data, and 3D models are also provided to support in the system design.

EPLAN files with macros are available for download from the EPLAN Data Portal at www.eplandataportal.com. The configurator in EPLAN Electric P8 provides access to Danfoss drive data, optimizes system design by automating the EDZ file generation, and ensures precise specifications.

Configuration files for drives or power converters are also available. MyDrive® Suite provides tools that support the entire lifecycle of the product, from system design to service. MyDrive® Suite is available at suite.mydrive.danfoss.com/.

The Danfoss product configurator (available at https://store.danfoss.com) helps in the product selection, and when the process has been completed, the tool provides a list of relevant documentation and accessories.

Detailed product information can also be accessed by reading the 2D code on the product label.

1.3.2 Locating Support Information

Additional information is available on the company website.

1. Go to www.danfoss.com.
2. Select *Products*.
3. Select *Drives*.
4. Select the product series, for example *Low-voltage drives* or *System modules*.
5. Select the product series (for example, iC7).

The browser opens the product page, which provides links to documents, drawings, and software of the product.

1.4 Version History

This guide is regularly reviewed and updated. All suggestions for improvement are welcome.

The original language of this guide is English.

Table 1: Version History

Version	Remarks
172F6361A	Design Guide created based on the previous Operating Guide 139Z6812C.
172F6361B	Information on using 6 system modules in parallel. Information on the new LCL filter variant LCL11W. Other small changes throughout the guide.
172F6361C	Information on a new voltage class 07. Information on a new product variant non-regenerative NFE module. Information on the new LC filter variant LC11W. Other small changes throughout the guide.
172F6361D	Complete data on the non-regenerative NFE module.

1.5 Abbreviations

Table 2: Abbreviations, Acronyms, and Symbols

Term	Definition
AC	Alternating current
AFE	Active front-end
AI	Analog input
AO	Analog output
BCU	Brake chopper
DC	Direct current
DI	Digital input
DO	Digital output
EMC	Electromagnetic compatibility
EN	European standards
ESD	Electrostatic discharge
GC	Grid converter

Danfoss Drives Oy © 2026.09

Table 2: Abbreviations, Acronyms, and Symbols - (continued)

Term	Definition
GND	Ground
I	Current
IEC	International Electrotechnical Commission
INU	Inverter
I/O	Input/output
IP	Ingress protection
IT	Isolé terre
LC	Inductor-capacitor
LED	Light-emitting diode
L/R	Time constant for a DC circuit
NC	Normally closed
NEMA	National Electrical Manufacturers Association
NFE	Non-regenerative front-end
NO	Normally open
PCB	Printed circuit board
PE	Protective earth
RMS	Root mean square
RTC	Real-time clock
SPD	Surge-protection device
STO	Safe torque off
U	Voltage

1.6 Recommended Disposal

When the product reaches the end of its service life, its primary components can be recycled.

Before the materials can be removed, the product must be disassembled. Product parts and materials can be dismantled and separated. Generally, all metals, such as steel, aluminum, copper and its alloys, and precious metals can be recycled as material. Plastics, rubber, and cardboard can be used in energy recovery. Printed circuit boards and large electrolytic capacitors with a diameter of over 2.5 cm (1 in) need further treatment according to IEC 62635 guidelines. To ease recycling, plastic parts are marked with an appropriate identification code.

Contact the local Danfoss office for further information on environmental aspects and recycling instructions for professional recyclers. End-of-life treatment must follow international and local regulations.

All products are designed and manufactured in accordance with Danfoss company guidelines on prohibited and restricted substances. A list of these substances is available at www.danfoss.com.



This symbol on the product indicates that it must not be disposed of as household waste. Do not dispose of equipment containing electrical components together with domestic waste.

It must be handed over to the applicable take-back scheme for the recycling of electrical and electronic equipment.

- Dispose of the product through channels provided for this purpose.
- Comply with all local and currently applicable laws and regulations.

2 Safety

2.1 Safety

When designing variable frequency drives, some residual dangers cannot be avoided. One example is the discharge time, which must be observed to avoid potential death or serious injury. The discharge time is shown on the danger label on the drive.

For further information on safety precautions related to the installation, operation, or maintenance of products, refer to the product-specific installation, safety, and operating guides.

2.2 Safety Symbols

The following symbols are used in Danfoss documentation and products.

⚠ DANGER

Indicates a hazardous situation which, if not avoided, will result in death or serious injury.

⚠ WARNING

Indicates a hazardous situation which, if not avoided, could result in death or serious injury.

⚠ CAUTION

Indicates a hazardous situation which, if not avoided, could result in minor or moderate injury.

NOTICE

Indicates information considered important, but not hazard-related (for example, messages relating to property damage).

	ISO warning symbol for general warnings
	ISO warning symbol for hot surfaces and burn hazard
	ISO warning symbol for high voltage and electric shock
	Symbol for indicating the required discharge time of the capacitors in the product.
	ISO action symbol for referring to the instructions

2.3 General Safety Considerations

⚠ WARNING



LACK OF SAFETY AWARENESS

This guide provides important information on preventing injury and damage to the equipment or the system. Ignoring this information can lead to death, serious injury, or severe damage to the equipment.

- Make sure to fully understand the dangers and safety measures present in the application.

Danfoss Drives Oy © 2026.09

DANGER

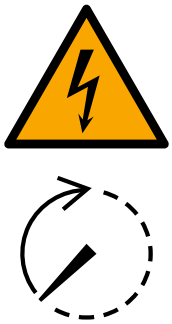

DISCHARGE TIME

The drive contains capacitors, which can remain charged even when the drive is not powered. High voltage can be present even when the warning indicator lights are off.

Failure to wait the specified time after power has been removed before performing service or repair work could result in death or serious injury.

- Stop the drive.
- Disconnect all input and output power sources of the drive (for example permanent magnet type motors, batteries, or DC-link connections to other drives).
- Wait for the capacitors to discharge fully before performing any service on the equipment. The discharge time is 5 minutes. If the device is broken or fuses have tripped, the discharge time is longer.
- Use a measuring device to make sure that there is no voltage, before opening the drive or performing any work on the cables.

DANGER



ELECTRIC SHOCK

The drive contains hazardous voltage when a power source is connected to the AC or DC terminals. Failure to disconnect all power sources can result in death or serious injury.

- Before performing any electrical work on the drive, disconnect, lock out, and tag out all power sources to the drive.
- There is more than 1 live circuit. See the relevant wiring diagrams in the product guide and the diagrams delivered with the product.

WARNING

UNINTENDED START

When the drive is connected to a power source, the system may start at any time, causing risk of death, serious injury, and equipment or property damage.

- Stop the drive and motor before configuring parameters.
- Make sure that the drive cannot be started by an external switch, a fieldbus command, an input reference signal from the control panel, or after a cleared fault condition.
- Disconnect the drive from the power source whenever safety considerations make it necessary to avoid unintended start.
- Check that the drive, motor, and any driven equipment are in operational readiness.

2.4 Target Group and Necessary Qualifications

Correct and reliable transport, storage, installation, operation, and maintenance are required for the trouble-free and safe operation of the products. Only qualified personnel are allowed to perform all related activities for these tasks. Qualified personnel are defined as properly trained staff, who are familiar with and authorized to install, commission, and maintain the equipment/systems and circuits in accordance with pertinent laws and regulations. Also, the qualified personnel must be familiar with the instructions and safety measures described in this guide and other relevant guides. Non-qualified electricians are not allowed to perform any electrical installation or troubleshooting activities.

Specialized training is required for repair. Only Danfoss authorized, qualified personnel are allowed to repair this equipment.

3 Danfoss iC7 Series

3.1 Overview of iC7 Series

The Danfoss iC7 series comprises 3 products that combine hardware and software. Hiding DC/DC data from release temporarily.

Table 3: The iC7 Series

Product	Product category	Product type	Application software
iC7-Automation	Air-cooled system modules	Non-regenerative front-end	Non-regenerative front-end (NFE) application
		Active front-end	Active front-end application
		Inverter	Industry application
	Enclosed drives	Active front-end	Active front-end application
		Inverter	Industry application
	Frequency converters	Frequency converter	Industry application, Motion application
iC7-Marine	Liquid-cooled system modules	Active front-end	Active front-end application
		Inverter	Propulsion & Machinery application
iC7-Hybrid	Air-cooled or liquid-cooled system modules	Grid converter	Grid converter application
			Generator application
		DC/DC converter	DC/DC converter application

Additional application software can be purchased, and some application software are only available for a specific hardware variant and product.

Application guides are available for all the application software packages.

Danfoss Drives Oy © 2026.09

4 Overview of the iC7 Series Air-cooled System Modules

4.1 System Modules

The air-cooled system modules come in 2 main mechanical variants: with or without an integration unit. The system modules are a size-optimized solution, and the system modules with integration units are intended for easy installation into cabinets, and provide integrated filters. The system modules with integration units also provide the possibility for back-channel cooling.

The power units are rated IP00 and therefore require installation in a cabinet or other enclosure after delivery.

The system modules include:

- Non-regenerative NFE modules
- Regenerative AFE modules
- Low-harmonic AFE modules
- Inverter (INU) modules
- Grid Converter (GC) modules

LCL Filters for the AFE modules are available as separate items.

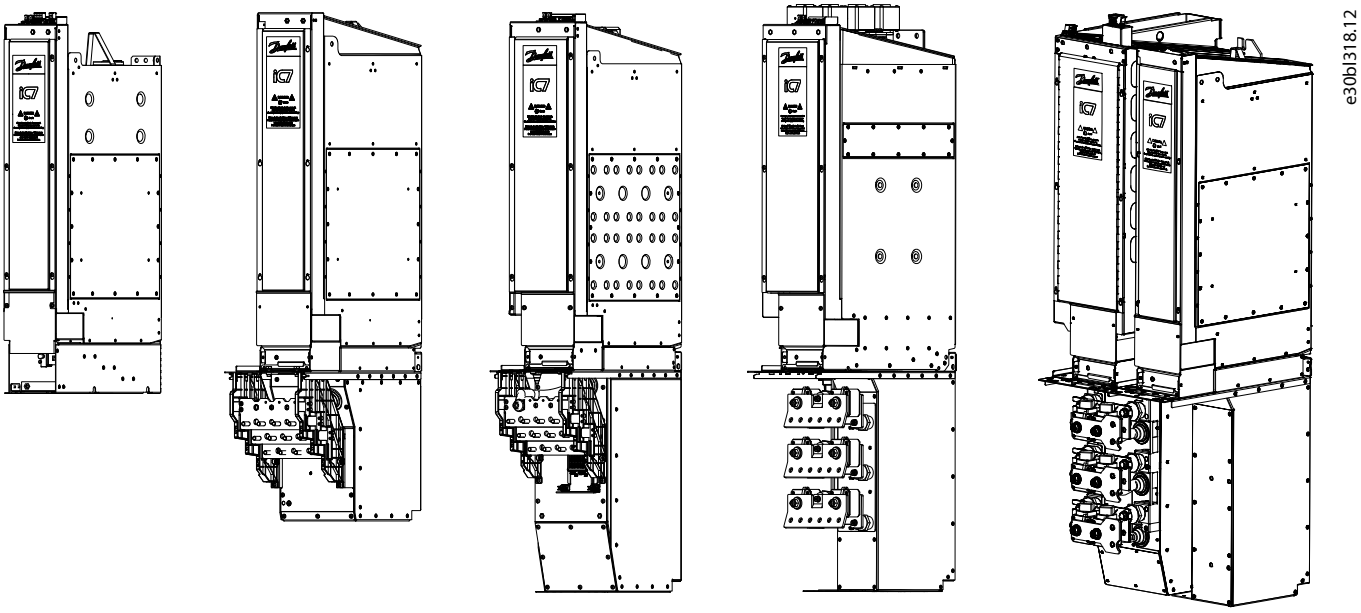

Figure 1: Overview of IM10 and IR10 with a Short and a Standard Integration Unit, the NFE Module with a Standard Integration Unit, and the LCL Filter and the AFE Module

Non-regenerative front-end

The non-regenerative front end (NFE) is used to transfer power between the AC input and DC link. The NFE has only a one-way function. This means that power can only be transferred from the AC input to the DC link. If braking is needed, a brake chopper module (BCU) has to be connected to the DC link.

In a typical NFE configuration, the desired number of inverters is connected to the DC link. The NFE configuration consists of the NFE module, a built-in AC choke, AC fuses, and DC fuses.

Active front-end

The active front-end (AFE) module is used to transfer power between the AC input and the DC bus. The main functionality of the AFE module is to maintain a stable DC-bus voltage reference and supply power for motor drives (INU). When there is load in the DC bus, the AFE module rectifies the alternating current and voltage and transfers power from the AC input to the DC bus. When there is excess energy in the DC bus, such as braking power of motors, the AFE module inverts the direct current and voltage, and transfers power from the DC bus to the AC input.

The AFE can boost the DC-bus voltage within the voltage window of the converter hardware. The advantage is that the DC voltage available for the inverters is not limited even under unideal grid conditions, or if the grid voltage is lower in some regions.

The power quality of the AFE is superior to diode or thyristor rectifiers, since it does not draw reactive current from the grid and the harmonic distortion is low (<5%). The advantage is that the incoming transformer does not need to be oversized, transformer losses are lower, and the unit can meet the most stringent harmonic requirements. The DC-bus voltage is also much smoother and AFE can also produce reactive current to compensate for other low power factor equipment.

Inverter

The inverter (INU) module is intended for the regulation of motor speed in response to system feedback or to remote commands from external controllers. The inverter module requires a DC power source such as AFE or NFE to form a motor drive system. A drive system consists of the system modules, the motor, and equipment driven by the motor. The inverter module can be used for power generation applications, but it is also intended for system and motor status surveillance.

Grid converter

The grid converter (GC) module is a dedicated inverter for advanced grid-forming and bi-directional AC/DC power conversion. The GC can invert the DC voltage and rectify the AC voltage just like an AFE, but the power conversion control features are more advanced. The grid converter supports both open-loop and closed-loop AC voltage and frequency control.

The grid converter can create a microgrid and operate as the only power supply (island mode). The GC module can also be connected in parallel to other generating units with the frequency drooping function (µGrid mode), and maintain the grid on its own if the other power generation is stopped. The grid converter can also inject high short-circuit current to ensure selectivity in the microgrid. Alternatively, the GC can be used to control active and reactive AC power or current, and DC power, current, or voltage.

Typical use cases for grid converters are AC-coupled energy storage, DC power supply for hydrogen electrolysis, micro grid-forming, shore power, shaft generator, and other marine energy management applications. The 1500 V DC (voltage class G7) grid converters can be used in applications that require grid code compliance.

4.2 Contents of the Delivery

The system modules are delivered horizontally on a wooden pallet. The integration unit is delivered in a separate package. Open the package only when the product is installed. It is not recommended to keep power units in storage in the vertical position.

Contents of the delivery:

- The IP00 power units
- Control unit with ordered options
- A set of optical fiber cables
- Control panel with a cable to control unit (option)
- An accessories bag
- Product documentation
- Integration unit (option +AExx)

Danfoss Drives Oy © 2026.09

4.3 Checking the Delivery

1. Examine the packaging and the product for transport damage.
   a. If the product was damaged during transport, contact the cargo insurance company or the carrier.
2. Make sure that the items supplied and the information on the product label correspond to the order confirmation.
   a. If the delivery does not match the order, contact the vendor immediately.

4.4 Description of the Frame Designation

A frame designation is used to refer to different types of iC7 series system modules. The frame designation describes the function, mechanical variant, and size of the system module.

The frame designation can have this format, for example: **IM10**.

Table 4: Description of the Frame Designation

Code	Description
I	**Function** N = Non-regenerative front-end I = Inverter A = Active front-end/Grid converter
M	**Mechanical variant** M = System module R = System module with integration unit
10	**Size** 10 11

4.5 Weights of the System Modules

Table 5: Weights of the System Modules

Frame	No integration unit [kg (lb)]	Short integration unit without filter, +AE01 [kg (lb)]	Short integration unit with CM filter, +AEC1 [kg (lb)]	Standard integration unit without filter, +AE10 [kg (lb)]	Standard integration unit with dU/dt Filter, +AEU1 [kg (lb)]	Standard integration unit with dU/dt and CM filter, +AEU2 [kg (lb)]	Standard integration unit with CM filter, +AEC2 [kg (lb)]	IP00 [kg (lb)]	IP00 with an IP54 cooling channel [kg (lb)]
AM10/ IM10	65 (143.3)	–[(1)]	–	–	–	–	–	–	–
AM11/ IM11	75 (165.3)	–	–	–	–	–	–	–	–
IR10	–	92 (202.8)	101 (222.7)	95 (209.4)	140 (308.6)	145 (319.7)	109 (240.3)	–	–
IR11	–	102 (224.9)	119 (262.4)	110 (242.5)	185 (407.9)	194 (427.7)	127 (280.0)	–	–
AR10	–	72 (158.7)	–	78 (172.0)	–	–	–	–	–

Table 5: Weights of the System Modules - (continued)

Frame	No integration unit [kg (lb)]	Short integration unit without filter, +AE01 [kg (lb)]	Short integration unit with CM filter, +AEC1 [kg (lb)]	Standard integration unit without filter, +AE10 [kg (lb)]	Standard integration unit with dU/dt Filter, +AEU1 [kg (lb)]	Standard integration unit with dU/dt and CM filter, +AEU2 [kg (lb)]	Standard integration unit with CM filter, +AEC2 [kg (lb)]	IP00 [kg (lb)]	IP00 with an IP54 cooling channel [kg (lb)]
AR11	–	82 (180.8)	–	88 (194.0)	–	–	–	–	–
NR11 +AE01 & +AE10	–	128–137 (282–302) (2)	–	154–162 (340–357) (2)	–	–	–	–	–
LCL Filter, LCL10	–	–	–	–	–	–	–	221 (487.2)	251 (553.4)
LCL Filter, LCL11	–	–	–	–	–	–	–	290 (639.3)	349 (769.4)
LCL Filter, LCL11W	–	–	–	–	–	–	–	–	329 (725.3)
LC11W	–	–	–	–	–	–	–	–	260 (573.2)

1) The symbol – in this table means that the value is not applicable.

2) The NFE weights are current-class specific.

4.6 Lifting the Product

The weights of system modules and different frames are different. It can be necessary to use a lifting device to move the drive from its package. For lifting the product, follow these instructions.

1. Remove the system module from the pallet where it was bolted to.
2. Use a lifting device that is sufficiently strong for the weight of the system module or filter.
3. Put the lifting hooks in the lifting loop or lifting hole on top of the product.

Danfoss Drives Oy © 2026.09

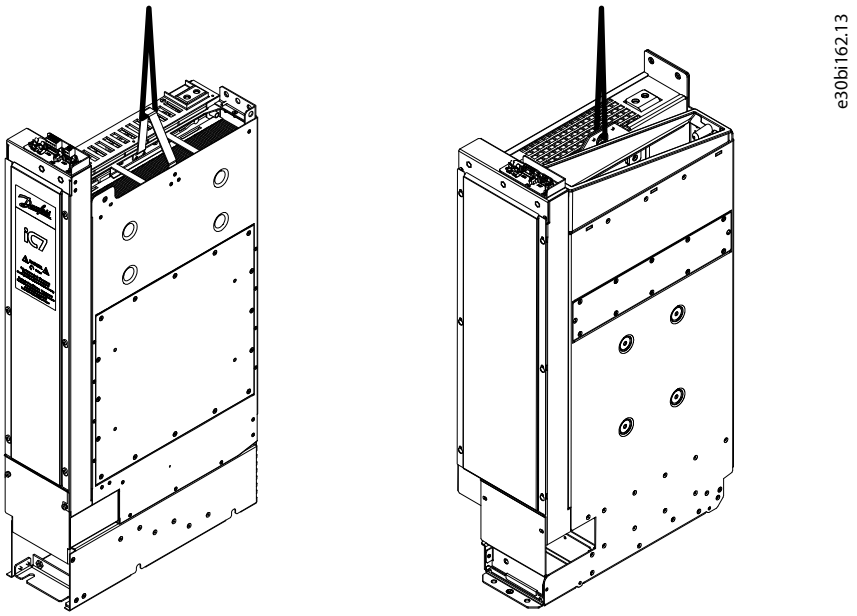

Figure 2: Lifting the System Module, IM10 and NR11

4. Lift the upper part of the LCL Filter for the AFE module vertically or horizontally.

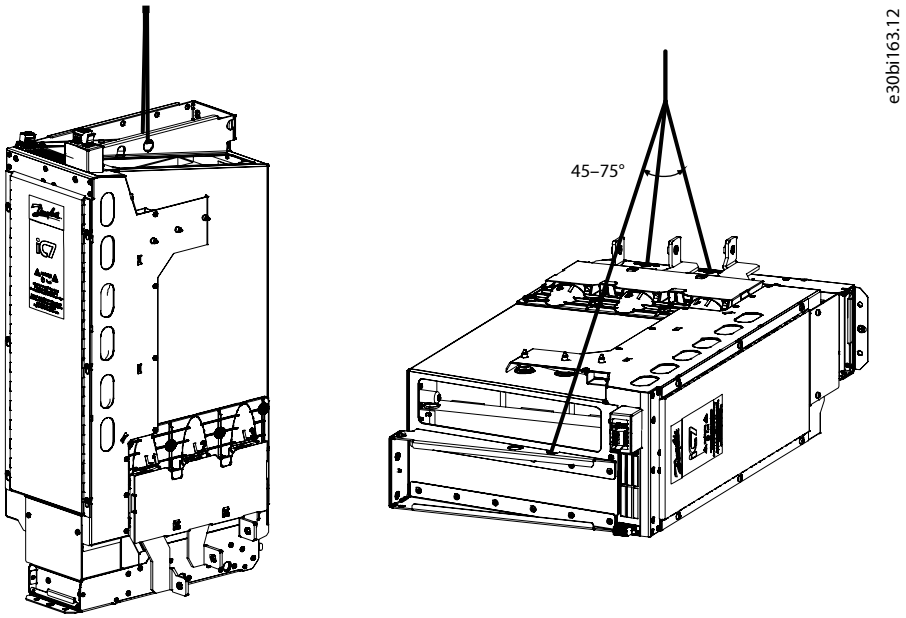

Figure 3: Lifting the Upper Part of the LCL Filter

5. When lifting the integration unit, make sure that the maximum lifting angle is correct (60° ±15°). Use the 4 lifting holes.

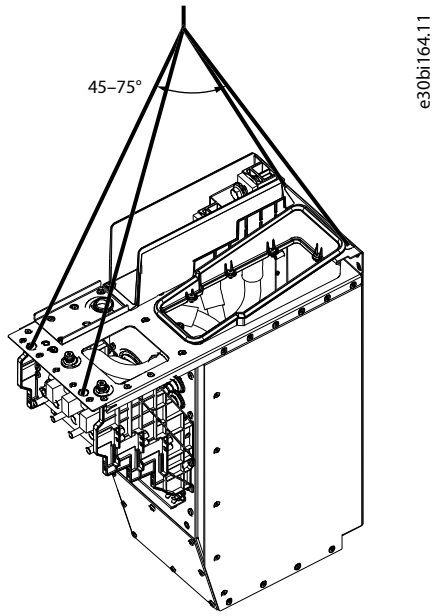

Figure 4: Lifting the Integration Unit

4.7 Common DC-bus Drive System

A common DC-bus drive system consists of 1 or more front-end modules (AFE, GC, or NFE) that convert the mains AC voltage into DC voltage and current, providing power to the common DC bus. A grid converter can also be used to form a local AC grid.

The common DC bus transfers the power to the inverter modules. The regenerative braking energy of an inverter can be used by the other inverters.

A common DC-bus drive system can also include a brake chopper unit or a DC/DC converter and an energy storage.

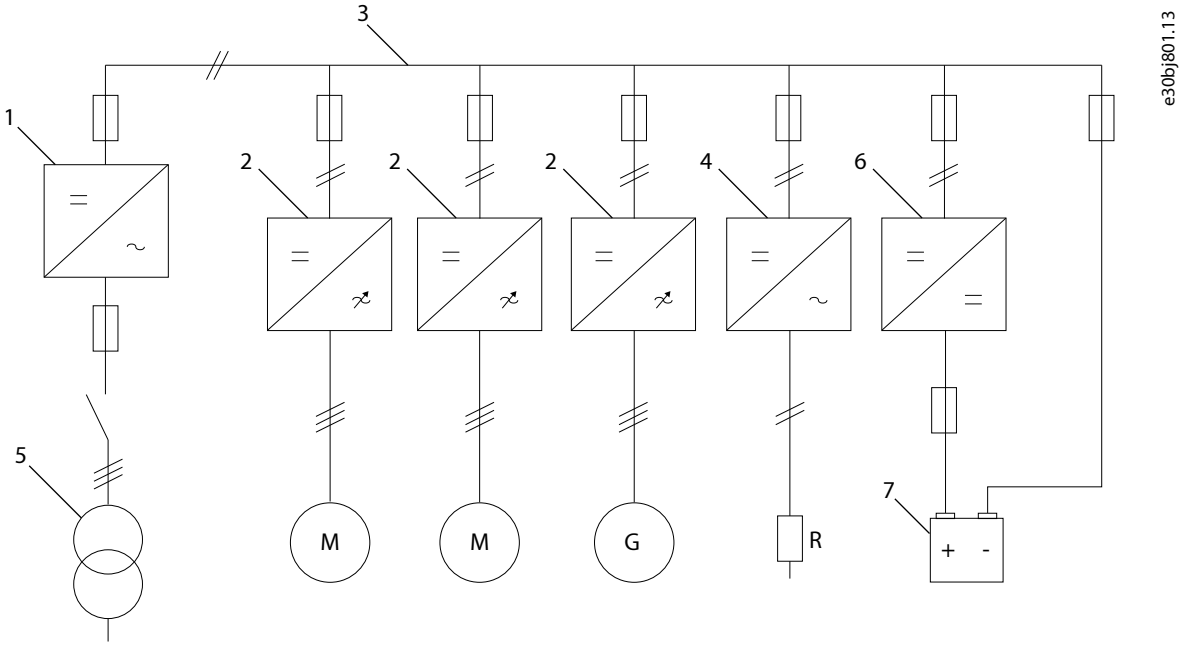

Figure 5: An Example of a Common DC-bus Drive System

1	AFE, GC, or NFE	2	Inverter module
3	DC bus	4	Brake chopper

Danfoss Drives Oy © 2026.09

5	Mains transformer	6	DC/DC converter
7	Energy storage		

4.8 Control System of the System Modules

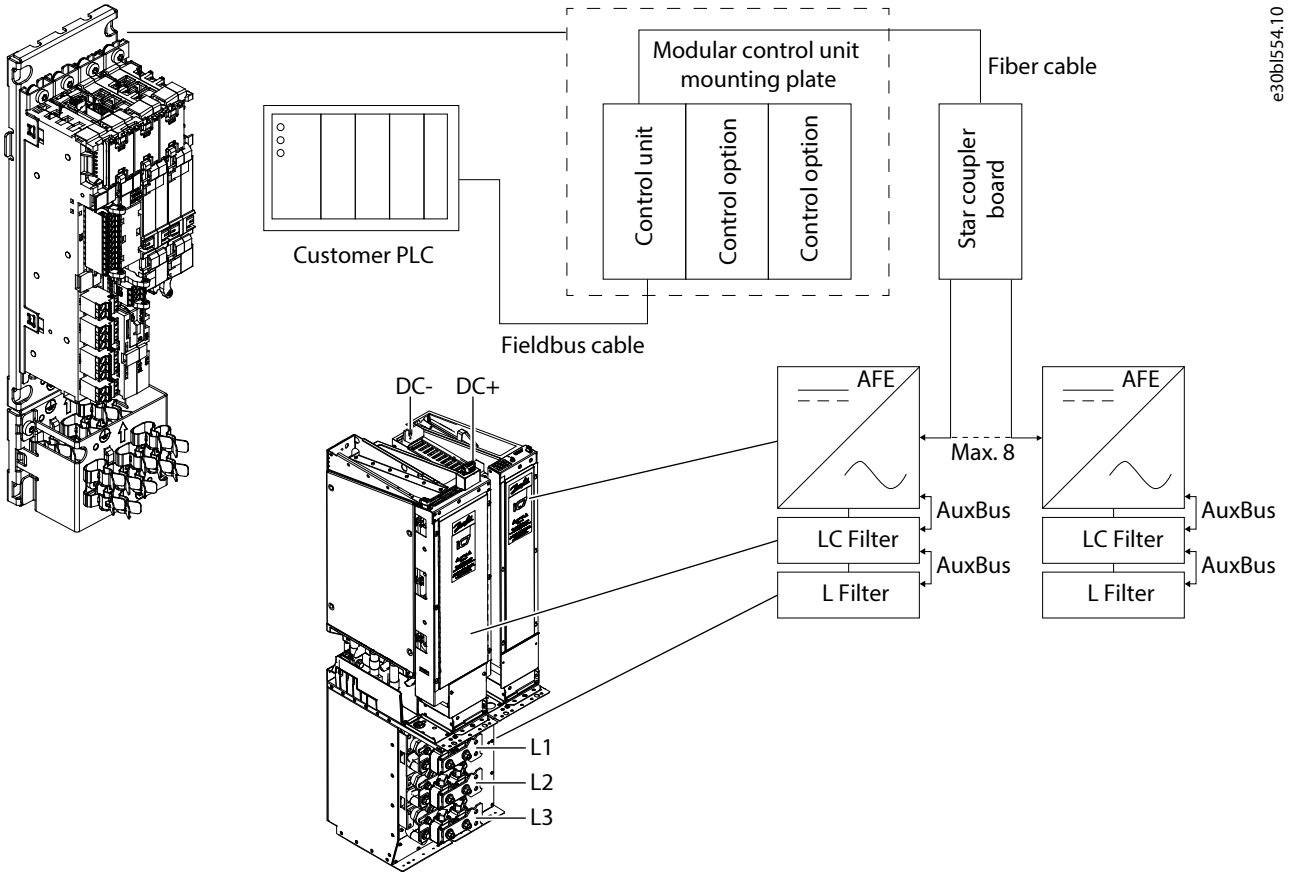

Figure 6: Example of a Control System of an AFE Module and LCL Filter

4.9 Description of the Model Code

The model code defines the specifications of the product included in the delivery. It is shown on the product label and the package label. The model code is made of standard codes and plus codes. Each part of the model code corresponds to the data in the order.

The model code of the system module can have this format, for example:

iC7-60SA3A05-816AE00F3+XXXX

Table 6: Description of the Model Code for System Modules

Code	Description
iC7-60	**Product group**
SA	**Product category** SA = system module, air-cooled

Table 6: Description of the Model Code for System Modules - (continued)

Code	Description
3A	**Product type** 3N = 3~ non-regenerative NFE 3A = 3~ regenerative AFE 3H = 3~ low-harmonic AFE GC = Grid converter module IN = Inverter module
05	**Voltage rating** 05 = 380–500 V AC 07 = 525–690 V AC
-816A	**Current rating** -03A0 = 3 A -816A = 816 A -3000 = 3000 A etc.
E00	**Protection rating** E00 = IP00/Open Type
F3	**EMC category** F3 = C3 F4 = C4
+XXXX	**Options** See 4.10 Options.

The model code of the LCL Filter can have this format, for example:

OF7Z3-M-AF-07-380A-A1-E00-F3

Table 7: Description of the Model Code for the LCL Filter

Code	Description
OF7Z3	**Product series** OF7Z1 = LC Filter OF7Z3 = LCL Filter
M	**Product target** M = System modules
AF	**Cooling method** AN = Natural air AF = Forced air LC = Liquid-cooled
07	**Voltage rating** 05 = 380–500 V AC 07 = 525–690 V AC 37 = 380–690 V AC 12 = 0–1200 V DC

Danfoss Drives Oy © 2026.09

Table 7: Description of the Model Code for the LCL Filter - (continued)

Code	Description
-380A	**Current rating** -380A = 380 A -416A = 416 A -1640 = 1640 A
-A1	**Thermal protection** -A1 = AuxBus thermal protection -TA = Thermal switch and AuxBus
-E00	**Protection rating** E00 = IP00/Open Type C54 = Channel IP54
-F3	**EMC category** F3 = C3 F4 = C4
+XXXX	**Options** –

4.10 Options

NOTE: A valid model code can only be created by using the product configurators, this list is only for reference.

Table 8: Options for the System Modules

Option group	Plus code	Description
Extension, integration unit	+AEXX	None
	+AE01	Short integration unit without filter
	+AEC1	Short integration unit with CM filter
	+AE10	Standard integration unit without filter
	+AEU1	Standard integration unit with dU/dt filter
	+AEU2	Standard integration unit with dU/dt and CM filter
	+AEC2	Standard integration unit with CM filter
Extra environmental protection	+AGCX	Coated boards
Mains input device	+AJXX	None
	+AJFX	AC fuses
DC fuses & devices	+AKXX	None
	+AKFX	DC fuses
Communication interface, X1/X2	+BAEL	Ethernet port, no protocol
	+BAPR	PROFINET RT OS7PR
	+BAMT	Modbus TCP OS7MT
	+BAIP	EtherNet/IP OS7IP
Communication interface, X0	+BBEL	Ethernet port, no protocol

Table 8: Options for the System Modules - (continued)

Option group	Plus code	Description
Standard I/O	+BDXX	None
	+BDC1	I/O and Relay Option OC7C1
	+BD00	None, without mounting plate
Functional Safety	+BEXX	None, not upgradable
	+BEF2	STO, SS1-t
Control panel	+BFXX	None
	+BF20	Control Panel 2.8 OPX20
Control panel mounting type	+BGXX	None
	+BGK1	Flush mount, IP55/UL Type 21
Control panel cable length	+BHXX	None
	+BH15	1.5 m (5 ft)
	+BH25	2.5 m (8 ft)
	+BH50	5.0 m (16 ft)
	+BHA0	10.0 m (32 ft)
Control unit cable length	+BKXX	None
	+BK03	0.3 m (1 ft), fiber
	+BK05	0.5 m (1 ft), fiber
	+BK15	1.5 m (5 ft), fiber
	+BK25	2.5 m (8 ft), fiber
	+BK50	5.0 m (16 ft), fiber
	+BK75	7.5 m (24 ft), fiber
	+BKA0	10.0 m (32 ft), fiber
	+BKA5	15.0 m (50 ft), fiber
Star coupler board cable length	+BLXX	None
	+BL15	1.5 m (5 ft), fiber
	+BL25	2.5 m (8 ft), fiber
	+BL50	5.0 m (16 ft), fiber
	+BL75	7.5 m (24 ft), fiber
	+BLA0	10.0 m (32 ft), fiber
	+BLA5	15.0 m (50 ft), fiber

Danfoss Drives Oy © 2026.09

Table 8: Options for the System Modules - (continued)

Option group	Plus code	Description
Control options	+C_XX	None, without mounting plate
	+C_X0	None
	+C_T0	Temperature Measurement OC7T0
	+C_C0	General Purpose I/O OC7C0
	+C_C1	I/O and Relay Option OC7C1
	+C_R0	Relay Option OC7R0
	+C_M0	Encoder/Resolver Option OC7M0
	+C_V0	Voltage Measurement Option OC7V0
	+C_F3	RS485 Communication OC7F3
Technical documentation	+EGXX	No manuals
	+EGIN	Installation guide
Documentation language	+EHXX	Multi-language
	+EHEN	English
Language pack	+EL01	Global
Shipping package	+TACB	Cardboard box package
	+TASE	Sea container package

4.11 Accessories

Table 9: Accessories for the system modules

Accessory	Description	Code number
iC7 AFE/GC pre-charging unit 10 IEC	Pre-charging unit size 10 according to IEC for iC7 air- and liquid-cooled system modules	181B5990
iC7 AFE/GC pre-charging unit 20 IEC	Pre-charging unit size 20 according to IEC for iC7 air- and liquid-cooled system modules	181B5991
iC7 AFE/GC pre-charging unit 30 IEC	Pre-charging unit size 30 according to IEC for iC7 air- and liquid-cooled system modules	181B5992
iC7 AFE/GC pre-charging unit 10 UL	Pre-charging unit size 10 according to UL for iC7 air- and liquid-cooled system modules	181B6065
iC7 AFE/GC pre-charging unit 20 UL	Pre-charging unit size 20 according to UL for iC7 air- and liquid-cooled system modules	181B6066
iC7 AFE/GC pre-charging unit 30 UL	Pre-charging unit size 30 according to UL for iC7 air- and liquid-cooled system modules	181B6067
iC7 optical fiber cable 0.3 m	Optical fiber cable (0.3 m) for control unit and star coupler board	181B6068
iC7 optical fiber cable 1.5 m	Optical fiber cable (1.5 m) for control unit and star coupler board	181B6069
iC7 optical fiber cable 2.5 m	Optical fiber cable (2.5 m) for control unit and star coupler board	181B6070
iC7 optical fiber cable 5 m	Optical fiber cable (5 m) for control unit and star coupler board	181B6071
iC7 optical fiber cable 7.5 m	Optical fiber cable (7.5 m) for control unit and star coupler board	181B6072
iC7 optical fiber cable 10 m	Optical fiber cable (10 m) for control unit and star coupler board	181B6073

Table 9: Accessories for the system modules - (continued)

Accessory	Description	Code number
iC7 optical fiber cable 15 m	Optical fiber cable (15 m) for control unit and star coupler board	181B6074
iC7 control panel cable 1.5 m	Cable for connecting control panel to system module (1.5 m)	181B6075
iC7 control panel cable 2.5 m	Cable for connecting control panel to system module (2.5 m)	181B6076
iC7 control panel cable 5 m	Cable for connecting control panel to system module (5 m)	181B6077
iC7 control panel cable 10 m	Cable for connecting control panel to system module (10 m)	181B6078
iC7 upper cooling duct 285 mm	Upper cooling duct (285 mm) for air-cooled system module with integration unit	181B6079
iC7 upper cooling duct 485 mm	Upper cooling duct (485 mm) for air-cooled system module with integration unit	181B6080
iC7 AC SM mounting brackets 400 mm	Mounting brackets (400 mm) for air-cooled system modules with integration unit	181B6081
iC7 AC SM mounting brackets 600 mm	Mounting brackets (600 mm) for air-cooled system modules with integration unit	181B6082
iC7 AC SM mounting brackets 800 mm	Mounting brackets (800 mm) for air-cooled system modules with integration unit	181B6083
iC7 Push-in G1/2 with 13 mm ferrules 10 pcs	Push-in liquid connector G1/2 with 13 mm ferrules 10 pcs	181B6096
iC7 13 mm ferrules 20 pcs	13 mm ferrules 20 pcs	181B6097

4.12 Labels on the System Module

To provide information about the product and the system modules, several labels are placed on the modules.

- Product label
  - Includes the model code and other information about the product. See 4.14 Product Label and 4.9 Description of the Model Code.
  - When the product includes several power units, the product label is placed on the left-most power unit, and the other units have only power unit labels.
- Power unit label
  - Includes information about the power unit.
  - The information on the label is specific to each power unit.
- Product modified label
  - List of changes done to the system module.
  - See 9.2 Using the Product Modified Label.

Danfoss Drives Oy © 2026.09

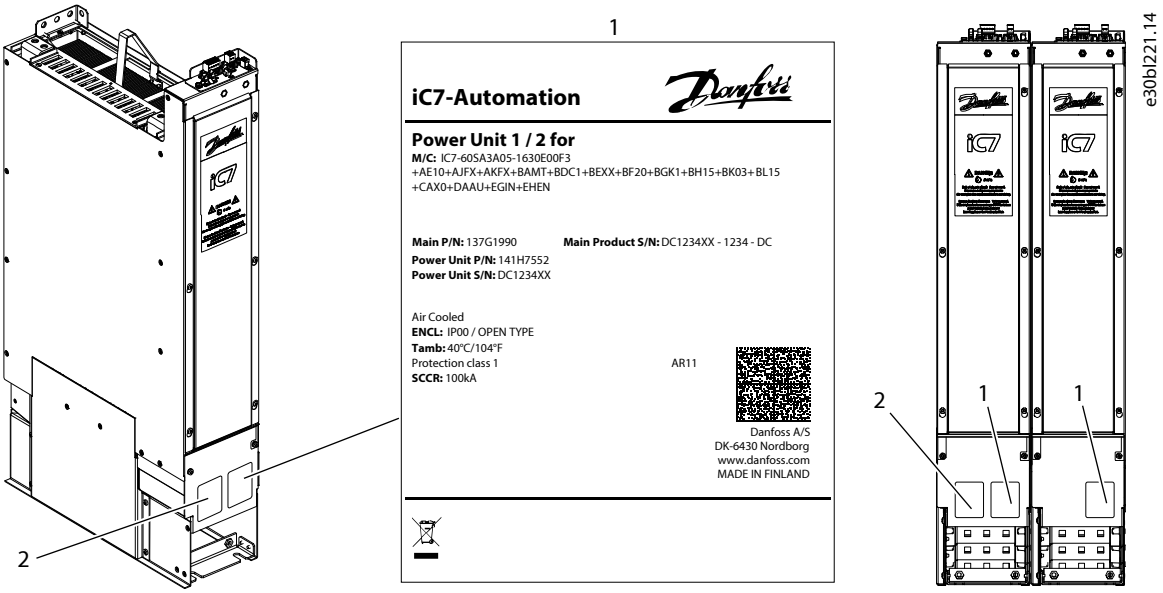

Figure 7: Locations of the Labels on System Modules

1	Power unit label	2	Product label

4.13 Labels on Other Components

There is an identification label on the components to provide information about the part, and information to which product and system modules the component belongs. It is important to match the components with the correct product and system modules.

The identification label on control units and star coupler boards includes:

- Name of the component and information to which system modules the component belongs, for example, "Control for 4xAR12" or "Star for 3xIR10".
- The serial number (S/N) of the product to which the component belongs, for example DC1234XZ. This code is also shown in a small QR code.
- Code for the component, for example 137G2222.
- QR code, which shows the model code of the product, to which this component belongs.

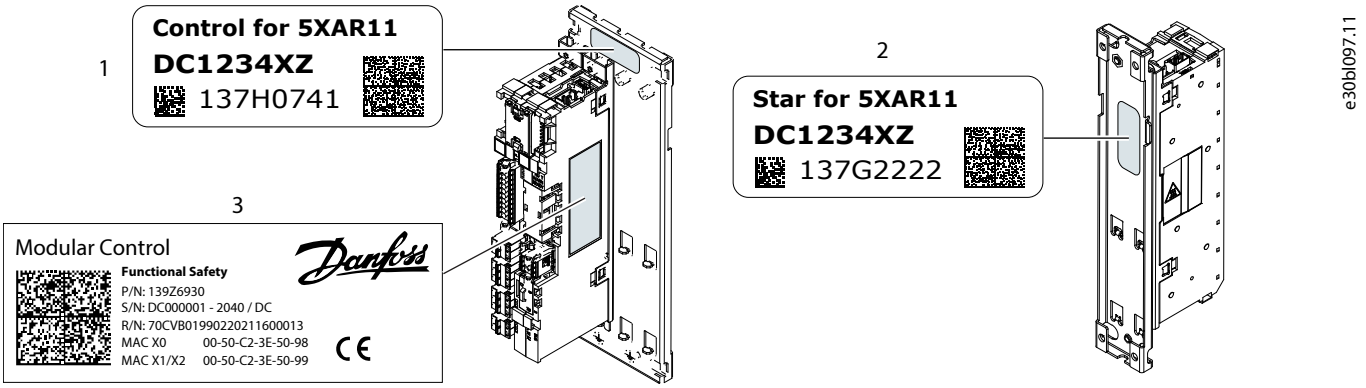

Figure 8: Labels on the Control Unit and Star Coupler Board

1	Identification label on the control unit	2	Identification label on the star coupler board
3	Product label on the control board		

There are similar identification labels on the integration units, filters, and other components. For example, the LCL Filter has a power unit label, like on the system modules. The integration units have an identification label that shows to which system module it belongs.

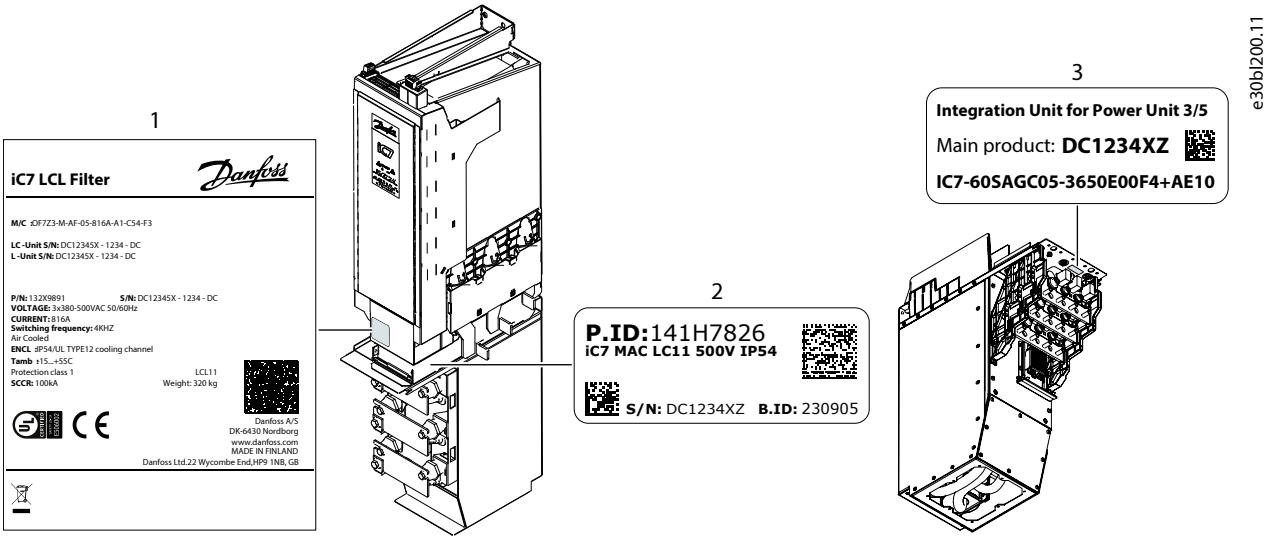

Figure 9: Labels on the LCL Filter and Integration Unit

1	Power unit label of LCL Filter	2	Identification label of LCL Filter
3	Identification label of integration unit		

4.14 Product Label

The product label gives information about the product.

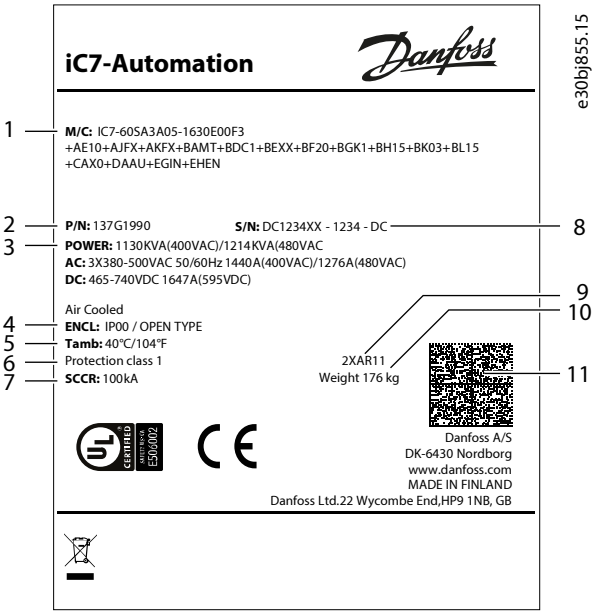

Figure 10: Example of a Product Label for iC7 Series Air-cooled System Modules

1	Model code of the product	2	Code number
3	Power, input, and output ratings	4	Protection rating
5	Temperature rating for ambient air	6	Protective class
7	Short-circuit current rating	8	Serial number

Danfoss Drives Oy © 2026.09

9	Frame designation	10	Weight
11	2D code accessible with a Datamatrix ECC 200 compatible barcode reader		

5 Mechanical Installation Considerations

5.1 Storing the System Module

If it is necessary to store the product before installing it, follow these instructions. Keep the equipment sealed in its packaging until installation.

1. Make sure that the ambient conditions correspond to these:
   - Temperature: -40...+70 °C (-40...+158°F)
   - Humidity: 0...95%, no condensation
2. If the package is kept in storage for more than 2 months, keep it in controlled conditions.
   a. Make sure that the temperature variation is small.
   b. Make sure that the humidity is less than 50%.
3. If the package is kept in storage for more than 12 months, connect power to the drive.
   a. Connect power to the drive.
   b. Keep the power on for a minimum of 2 hours.
   c. Disconnect the power.
   d. Wait for the correct discharge time before removing the drive and storing it again.
4. If the package is kept in storage for several years, reform the capacitors to prevent damage to the capacitors.
   a. Connect a DC supply with adjustable current limit to the DC+ and DC- terminals.
   b. Set the current limit (250 mA). If there are parallel power units, multiply the value with the number of power units.
   c. Set DC voltage (1.35 * U_n AC), where U_n is the drive nominal voltage.
   d. Keep the power on for a minimum of 1 hour.
   e. Disconnect the DC supply from the DC+ and DC- terminals.

5.2 Requirements for the Cabinet

The products that are described in this guide have the protection rating IP00/Open Type and do not have an enclosure. They must be installed in a cabinet or other enclosure that has a correct level of protection against the ambient conditions in the installation area. Make sure that the cabinet gives protection against water, humidity, dust, and other contaminations.

The mounting surface of the cabinet must be non-combustible.

The cabinet must also be sufficiently strong to carry the weight of the system module and other devices. It is recommended to use a free-standing, floor-mounted cabinet made of sheet metal.

The maximum temperature of the air inside the cabinet is +60 °C (+140 °F).

The protection rating of the cabinet must be at least IP21/UL Type 1. When preparing the installation, obey the local regulations.

5.3 Installation Direction

The system modules can be installed in different directions.

NOTICE

INSTALLATION DIRECTION OF SIZE 11 SYSTEM MODULES

The size 11 system modules (IM11, IR11, AM11, AR11) use a heat pipe technology that limits the installation direction. The heat pipes rely on gravitation, thus do not operate fully in certain orientations.

- Do not install the system module on its right side.

Danfoss Drives Oy © 2026.09

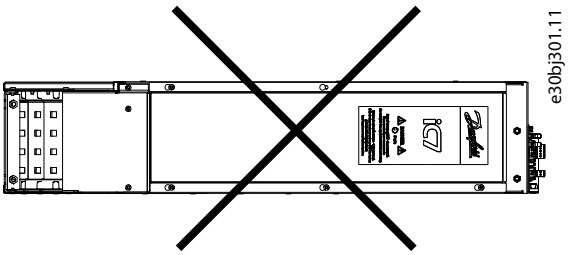

Figure 11: Forbidden Installation Direction of the System Module, Size 11

The system modules with integration units must be installed in a vertical position.

5.4 Installation Requirements

The system modules that are described in this guide have the protection rating IP00/Open Type. Install them in a cabinet or other enclosure that has a correct level of protection against the ambient conditions in the installation area.

The installation procedure varies between product categories and mechanical variants depending on selected options.

Reserve enough space around the system module to ensure sufficient cooling. The mounting plane must be relatively even.

5.5 Installing System Modules into Cabinet

When there are 2 or more system modules, they can be installed side by side.

1. To install the system module, use the mounting holes.

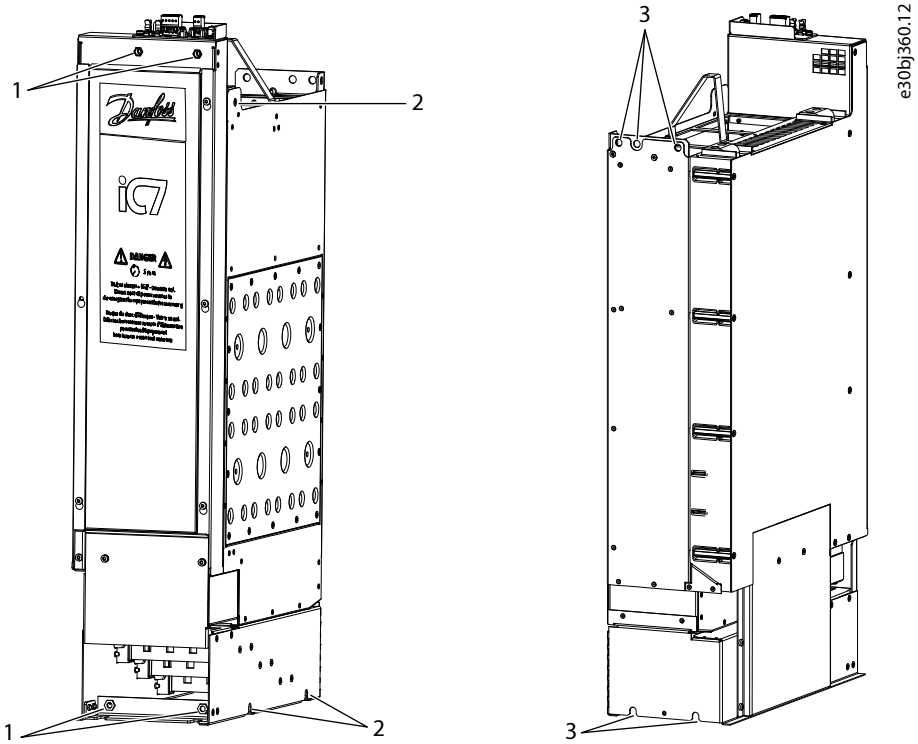

Figure 12: Mounting Holes for IM10, IM11, AM10, AM11

1	Mounting holes at the front (in the front fixing beam)	2	Mounting holes at the side
3	Mounting holes at the back		

2. Attach the system module to the back wall of the cabinet and to the front mounting brackets.

The front fixing beam can be rotated so that the screws can be attached from the front or from the top.

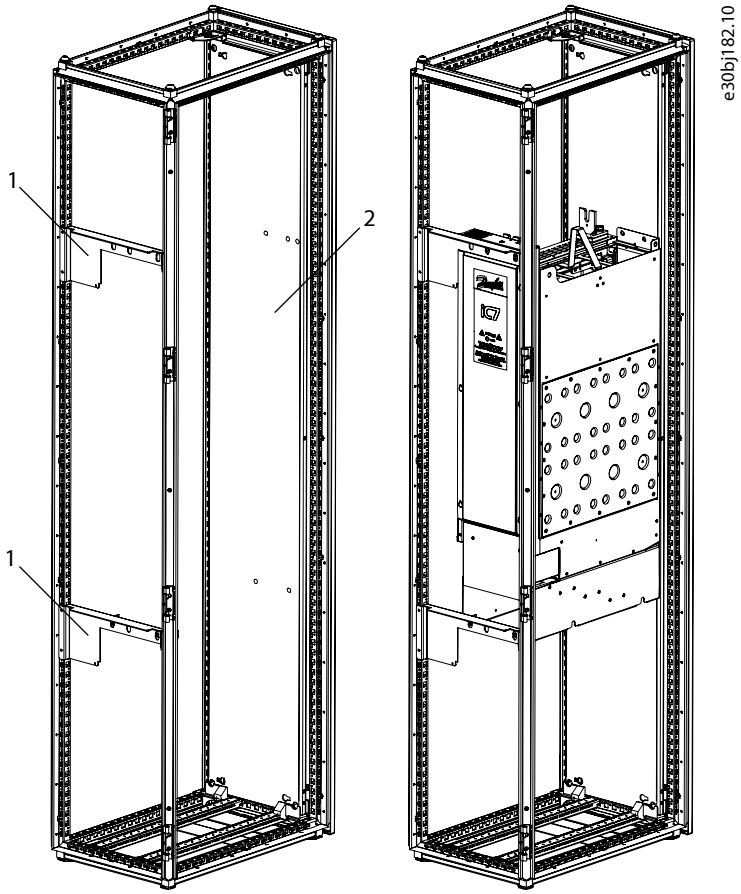

Figure 13: Mounting on the Back Wall, IM10, IM11, AM10, AM11

1	Front mounting brackets	2	Back wall of the cabinet

3. If the cabinet does not have a back wall, attach the system module to the front and side mounting brackets.

   The front fixing beam can be rotated so that the screws can be attached from the front or from the top.

Danfoss Drives Oy © 2026.09

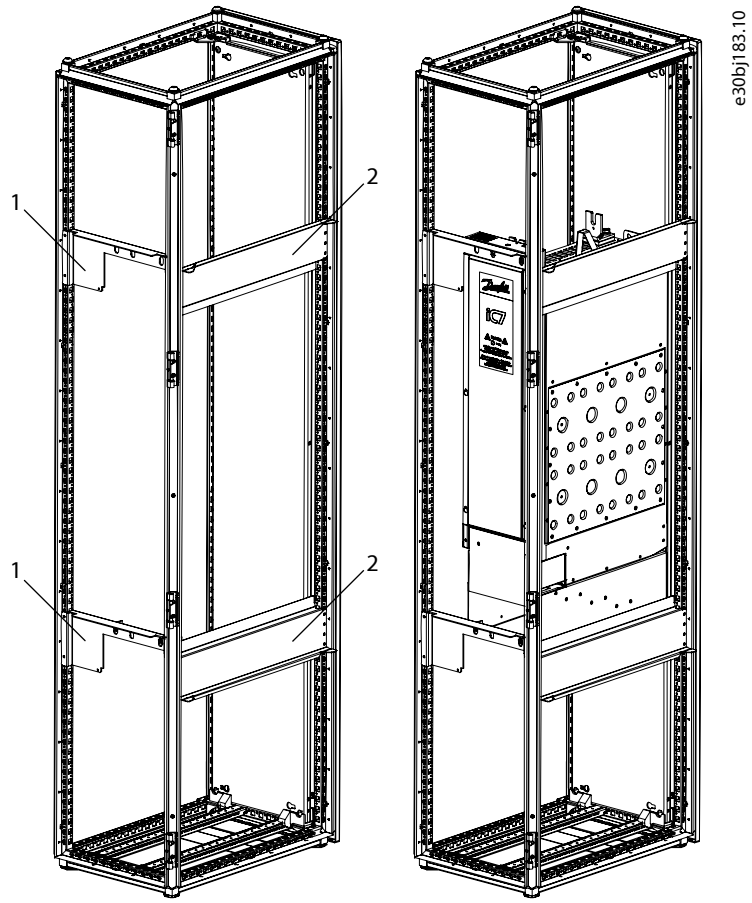

Figure 14: Mounting on the Mounting Brackets, IM10, IM11, AM10, AM11

1	Front mounting brackets	2	Side mounting brackets

5.6 Installing NFE Modules with Integration Units into Cabinet

⚠ DANGER

RISK OF ELECTRIC SHOCK

Using power units that have AR or IR in their frame designation without integration units will cause death or severe injury.

- Do not use AR10, AR11, IR10, or IR11 power units without integration units.

1. Install mounting brackets to the cabinet.

   Mounting brackets are not included in the delivery, but are available as accessories.

   See 4.11 Accessories.

2. Attach the table and the standard integration unit to the front and rear brackets, and to the cabinet floor.

   In the front, use countersunk screws.

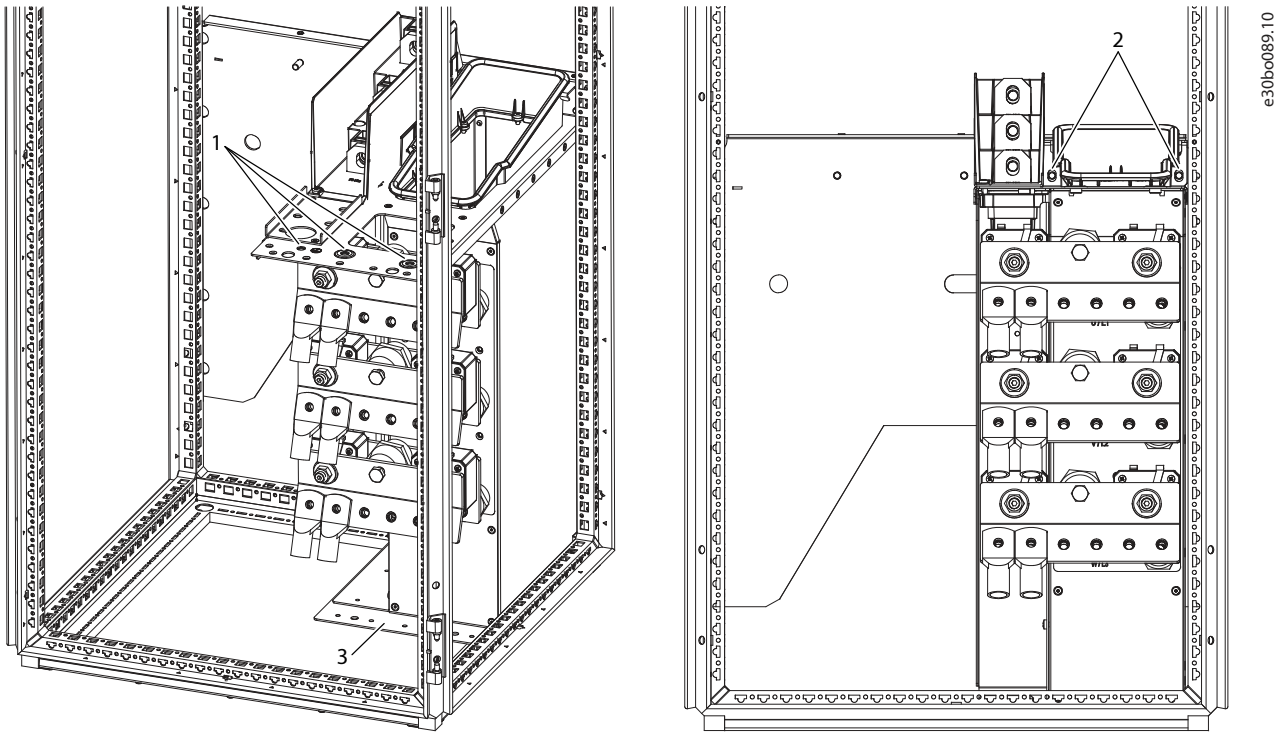

Figure 15: Installing the Standard Integration Unit into the Cabinet, NR11

1	Mounting holes at the front	2	Mounting holes at the back
3	Mounting holes at the bottom		

3. Attach the short integration unit to the brackets. Attach it from the rear bottom to the rear bracket.

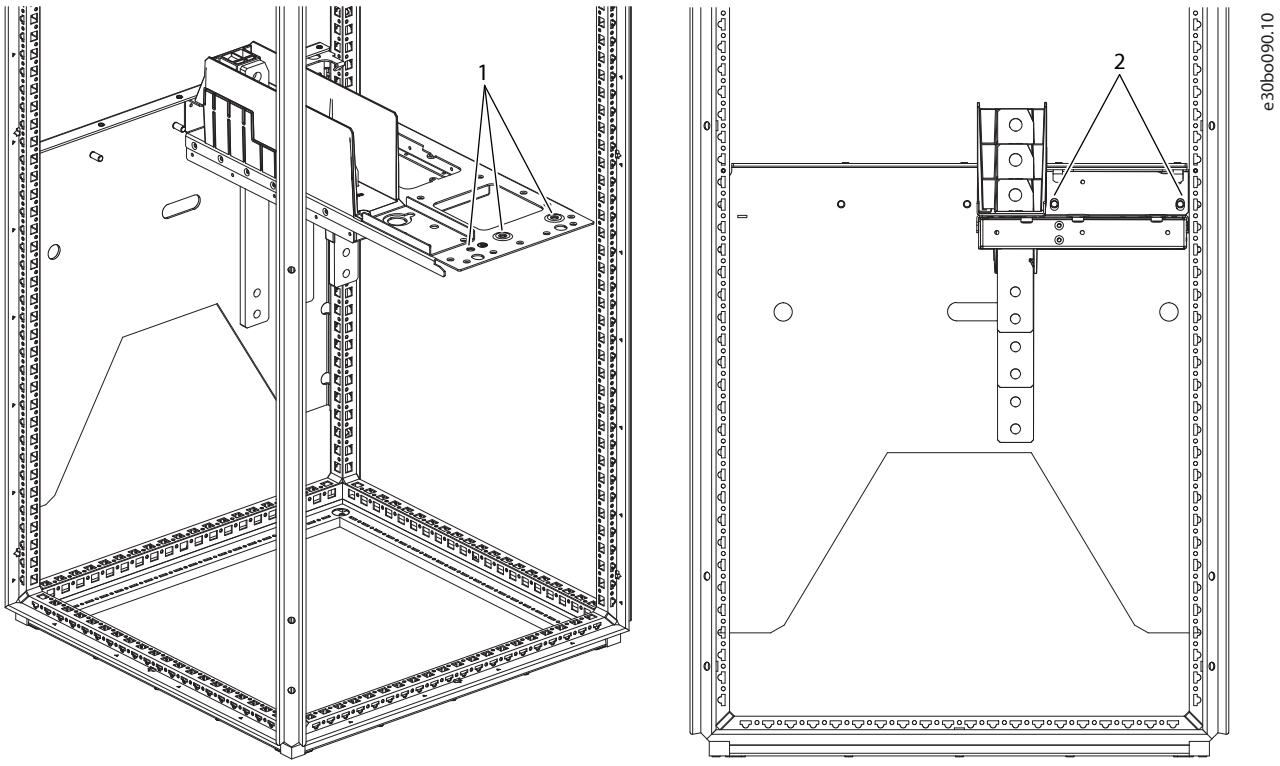

Figure 16: Front and Back Screws of the Short Integration Unit, NR11

Danfoss Drives Oy © 2026.09

1	Mounting holes at the front	2	Mounting holes at the back

4. Push and slide the NFE module into the cabinet.
   a. Add the top front bracket.
   b. Attach the system module to the table and to the top front bracket (screw M8x20).

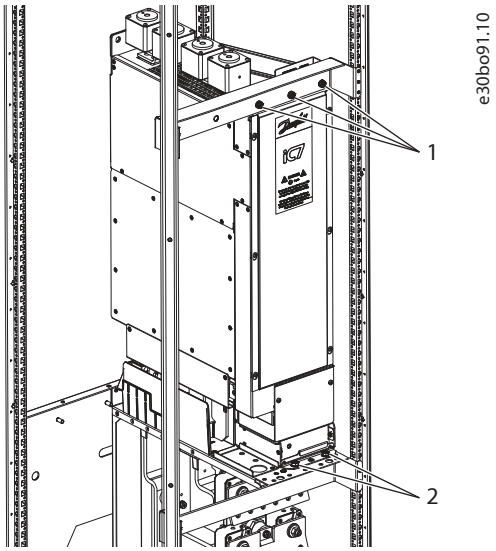

Figure 17: Installing the NFE Module into the Cabinet, NR11

1	Upper mounting holes in the front	2	Lower mounting holes in the front

5.7 Installing Inverter Modules with Integration Units into Cabinet

⚠ DANGER

RISK OF ELECTRIC SHOCK

Using power units that have AR or IR in their frame designation without integration units will cause death or severe injury.

- Do not use AR10, AR11, IR10, or IR11 power units without integration units.

1. Install mounting brackets to the cabinet.

   Mounting brackets are not included in the delivery, but are available as accessories.

   See 4.11 Accessories.

2. Attach the table and the standard integration unit to the front and rear brackets, and to the cabinet floor.

   In the front, use countersunk screws.

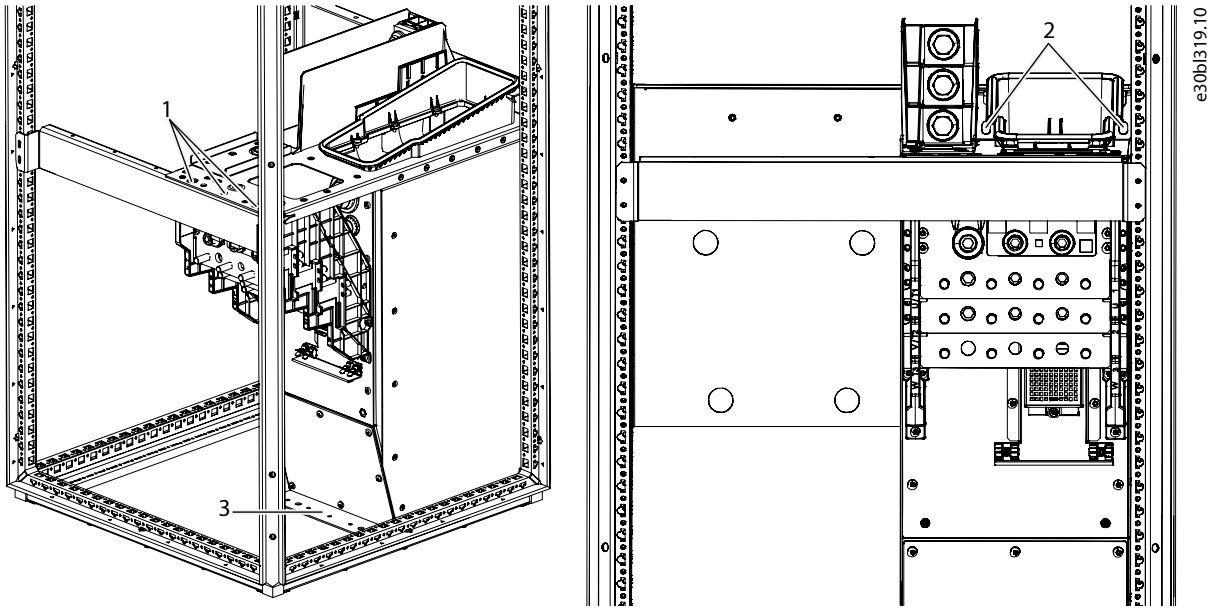

Figure 18: Installing the Standard Integration Unit into the Cabinet, IR10, IR11

1	Mounting holes at the front	2	Mounting holes at the back
3	Mounting holes at the bottom		

3. Attach the short integration unit to the brackets. Attach it from the rear bottom to the rear bracket.

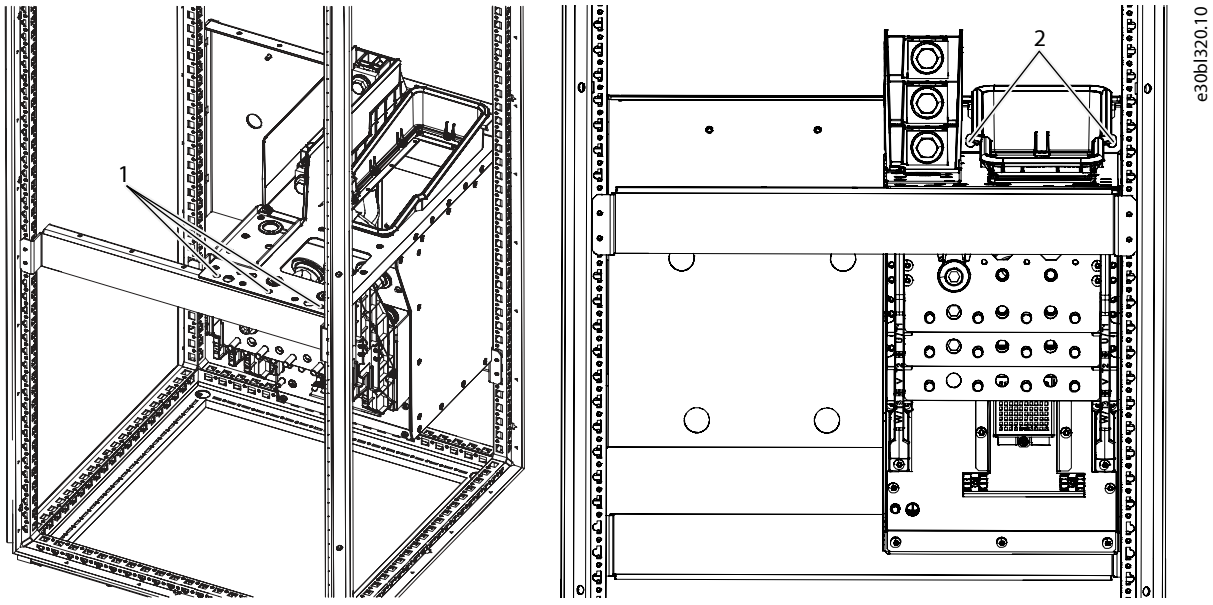

Figure 19: Front and Back Screws of the Short Integration Unit, IR10, IR11

1	Mounting holes at the front	2	Mounting holes at the back

Danfoss Drives Oy © 2026.09

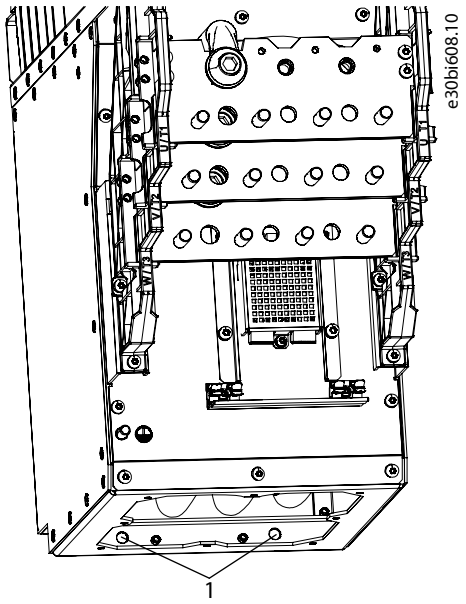

Figure 20: Bottom Screws of the Short Integration Unit, IR10, IR11

1	Mounting holes at the bottom

4. Push and slide the inverter module into the cabinet.
   a. Add the top front bracket.
   b. Attach the system module to the table and to the top front bracket (screw M8x20).

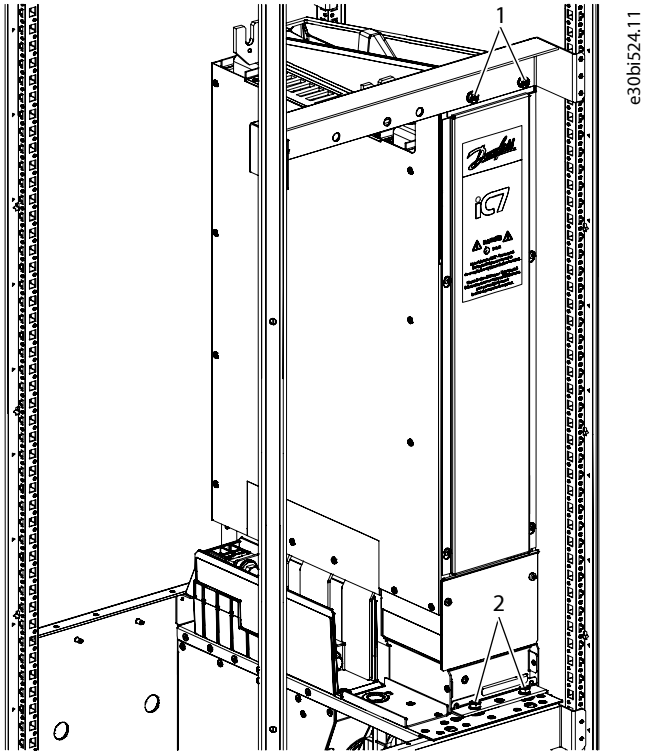

Figure 21: Installing the Inverter Module into the Cabinet, IR10, IR11

1	Upper mounting holes in the front	2	Lower mounting holes in the front

5.8 Installing LCL Filters and AFE Modules with Integration Units into Cabinet

DANGER

RISK OF ELECTRIC SHOCK

Using power units that have AR or IR in their frame designation without integration units will cause death or severe injury.

- Do not use AR10, AR11, IR10, or IR11 power units without integration units.

NOTE: These instructions also apply to the LC Filter LC11W.

1. Install mounting brackets to the cabinet.

   Mounting brackets are not included in the delivery.

2. Install the lower part of the LCL Filter into the cabinet.

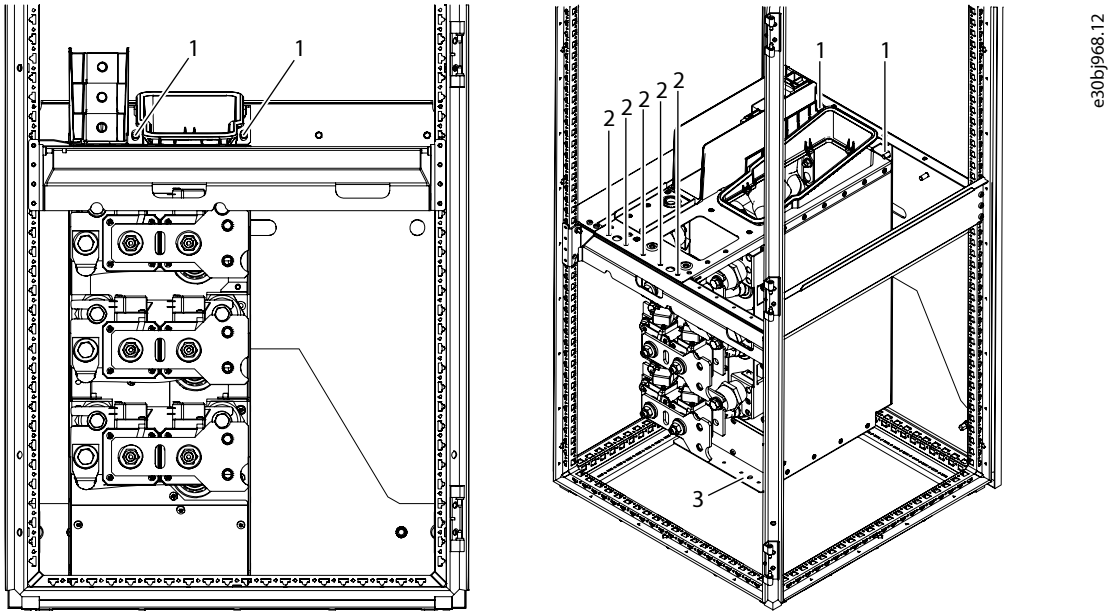

Figure 22: Installing the Lower Part of the LCL Filter

1	Mounting holes at the back	2	Mounting holes at the front
3	Bottom mounting bracket		

3. Install the integration unit of the AFE module into the cabinet.

Danfoss Drives Oy © 2026.09

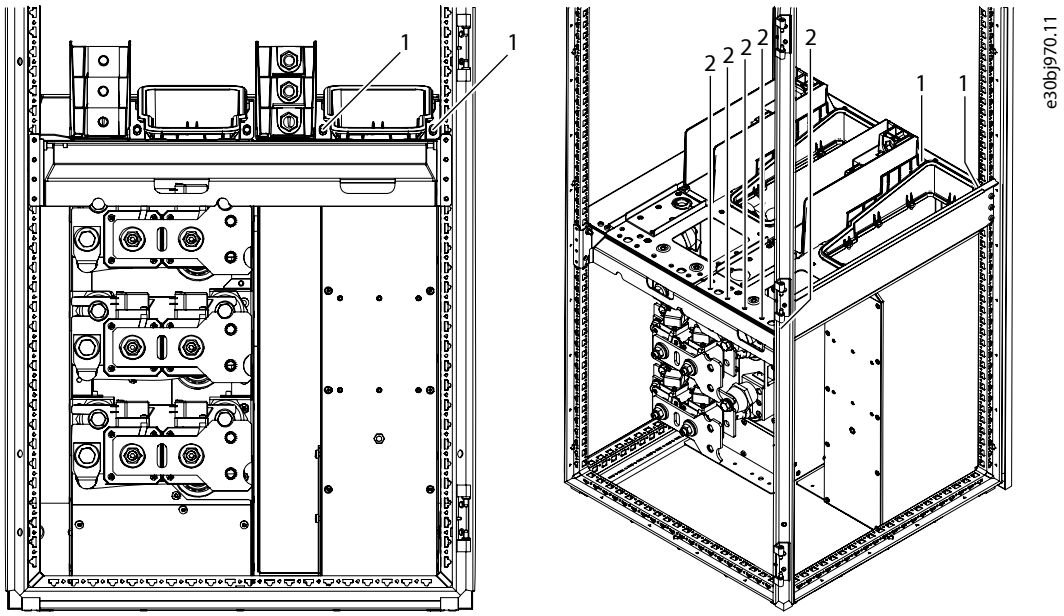

Figure 23: Installing the Integration Unit of the AFE Module, AR10, AR11

1	Mounting holes at the back	2	Mounting holes at the front

4. Push and slide the upper part of the LCL Filter into the cabinet.

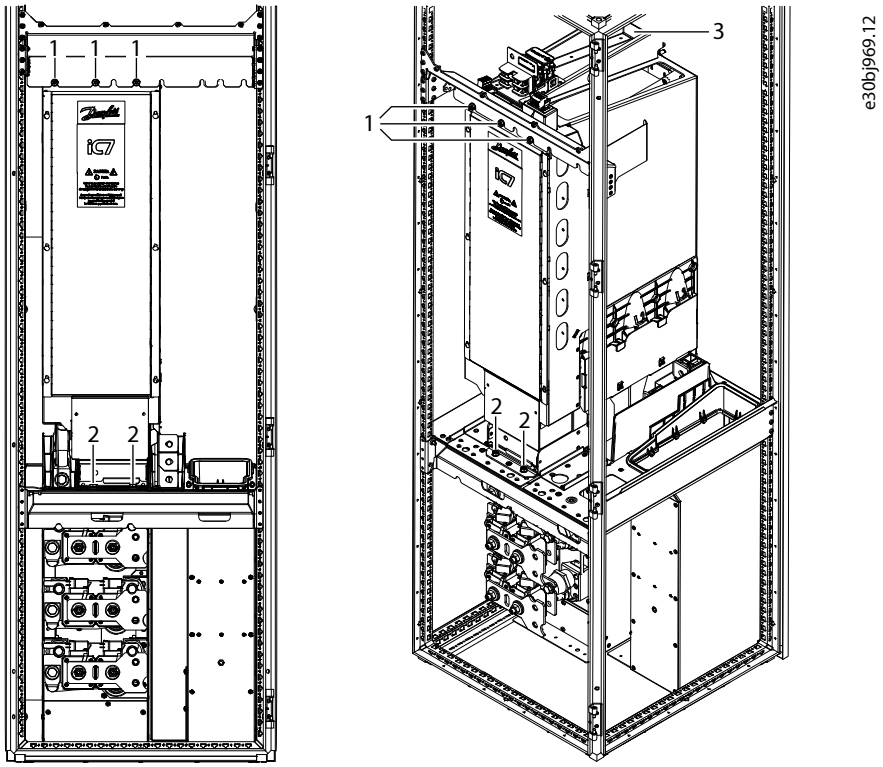

Figure 24: Installing the Upper Part of the LCL Filter

1	Upper mounting holes at the front	2	Lower mounting holes at the front
3	The upper mounting holes at the back		

5. Push and slide the AFE module into the cabinet.

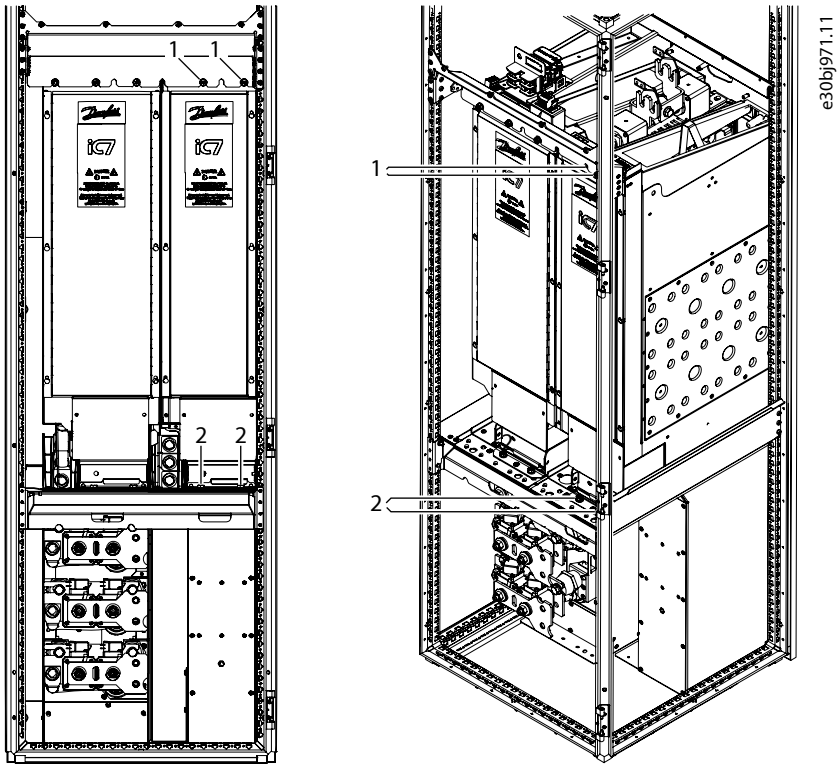

Figure 25: Installing the AFE Module, AR10, AR11

1	Upper mounting holes at the front	2	Lower mounting holes at the front

6. Add the top front bracket.
   a. Attach the upper part of the LCL Filter and the AFE module to the table and to the top front bracket (screw M8x20).
7. In the LCL filter, connect the thermocouple wire from the lower part of the filter to terminal X205 on the AuxBus temperature measurement board.

The thermocouple wire of the upper part of the LCL Filter is connected to terminal X206.

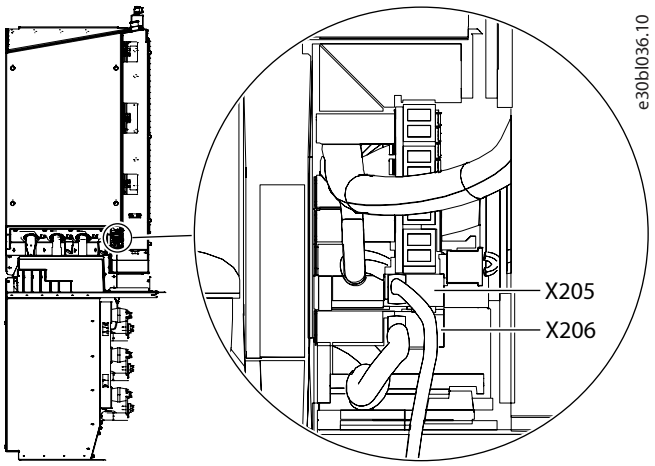

Figure 26: Thermocouple Wiring in the LCL Filter

Danfoss Drives Oy © 2026.09

5.9 Cooling Requirements

5.9.1 General Cooling Requirements

The power units produce heat in operation. The fan circulates air and decreases the temperature of the drive. Make sure that there is sufficient free space around the product.

Some free space in front of the drive is also necessary for maintenance. It must be possible to open the cabinet door. With 2 or more system modules, side-by-side installation is possible.

Make sure that the temperature of the cooling air does not become higher than the maximum ambient operating temperature or lower than the minimum ambient operating temperature of the drive.

The air must move freely and efficiently through the cabinet and the drive. Make sure that the hot air goes out of the cabinet and does not recirculate back into the cabinet.

IMPORTANT: There must be a minimum of 200 mm (8 in) of space above the drive without obstacles that can stop the airflow.

5.9.2 The Quantity of Cooling Air

Table 10: The Necessary Quantity of Cooling Air

Product	The quantity of cooling air [m^3/h]
Inverter module with dU/dt & CM Filter	870
AFE & inverter modules without options in the integration unit	920
LCL Filter	970

This quantity of cooling air is sufficient for the power unit. If there are other devices that generate heat inside the cabinet, or if more air filters are used (for example, to have a higher protection rating), increase the surface area of the air intake holes.

5.9.3 Cooling of System Modules

In the system module without an integration unit, the cooling air is taken from below and exhausted from the top.

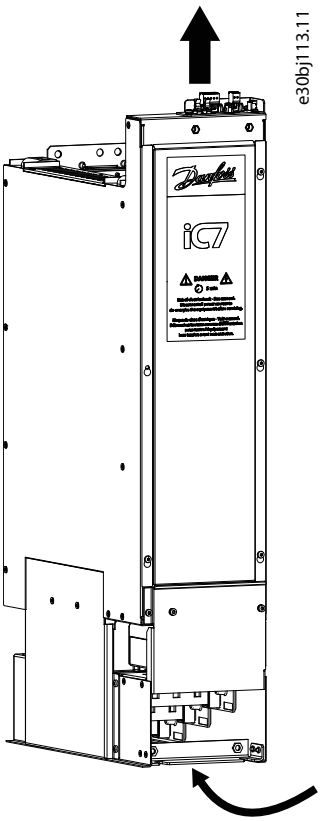

Figure 27: Cooling of System Modules without Integration Units

5.9.4 Cooling of System Modules with Integration Units

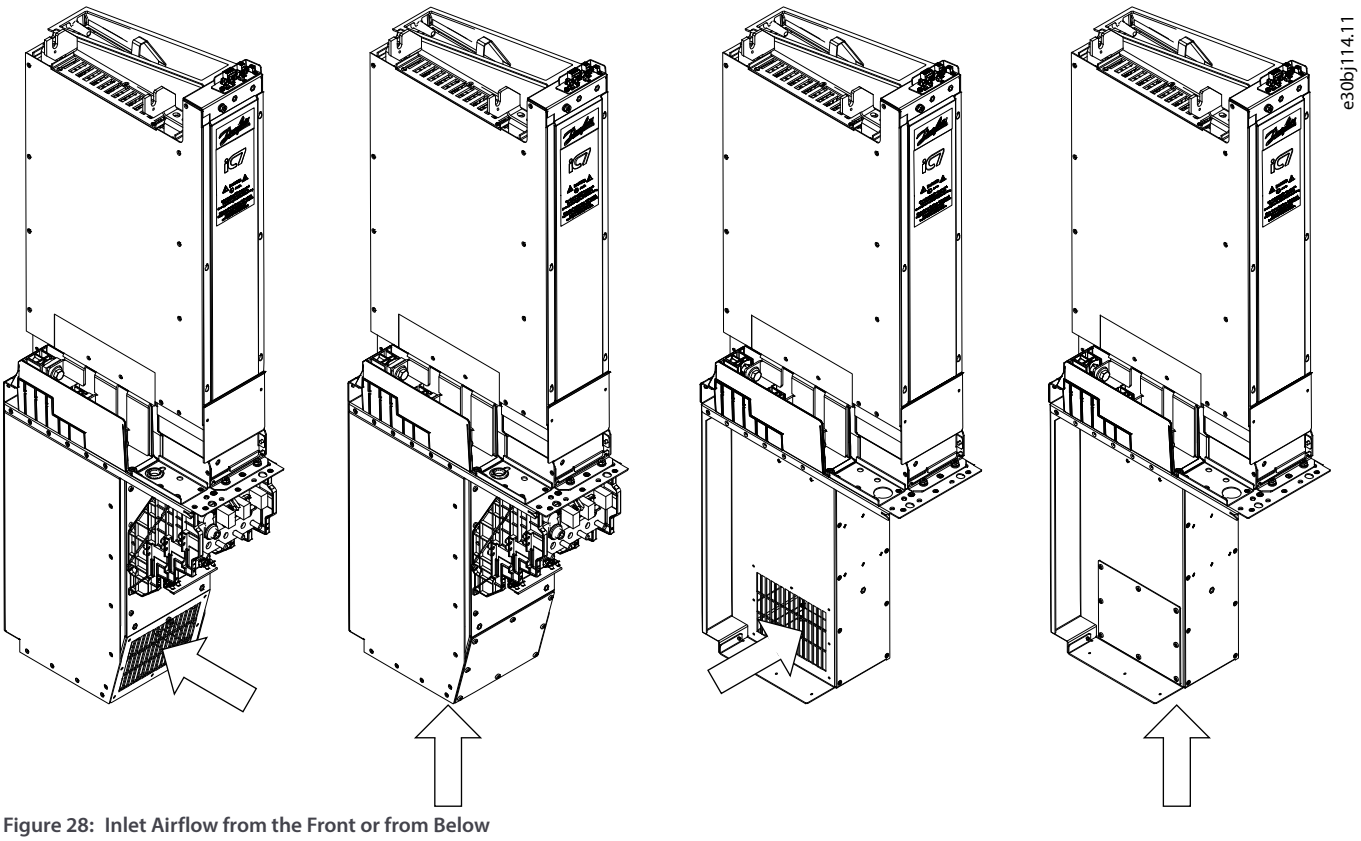

Figure 28: Inlet Airflow from the Front or from Below

Danfoss Drives Oy © 2026.09

In the system modules with integration units, there are 2 methods to arrange inlet and outlet airflow. The inlet airflow can enter from the front or from below of the product. To allow cooling air to enter from the front, remove the air inlet covers of the integration unit.

The outlet airflow can exit the system module directly from the top or through a top duct. The top duct is available as an accessory. Attach the top duct to the cabinet roof and back wall.

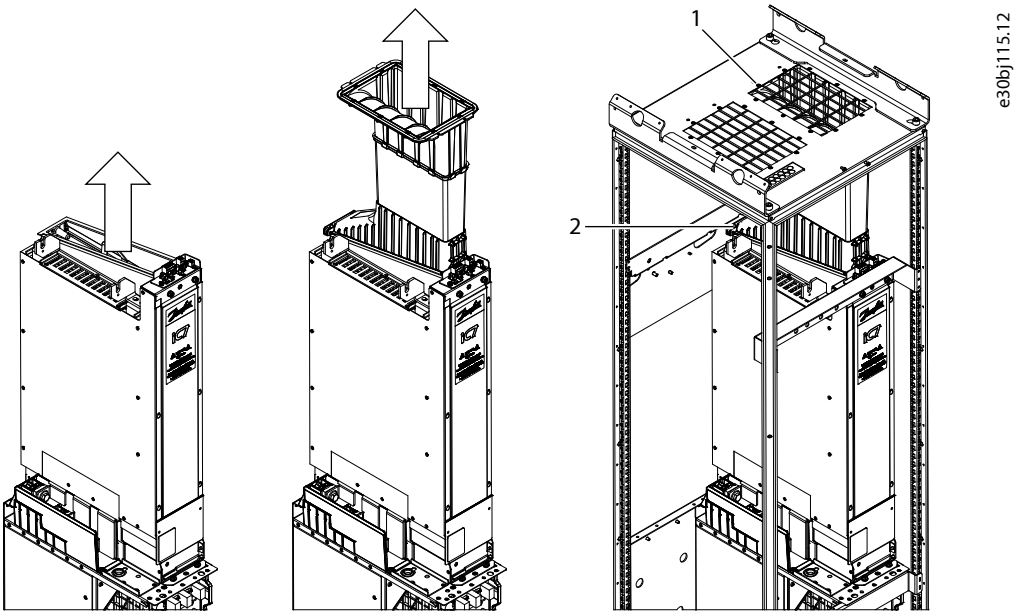

Figure 29: Outlet Airflow with or without a Top Duct

1	Top duct mounted to roof of cabinet	2	Top duct mounted to back wall of cabinet

5.9.5 Preventing the Recirculation of the Cooling Air

Cooling air must be taken in through the ventilation gaps on the door and blown out at the top of the enclosure. To steer the hot air from the power unit to the outlet at the top of the enclosure and prevent it from circulating back, follow these instructions.

1. Install air guides in the gaps between the power unit and the cabinet walls. Place the air guides below the air outlet gaps at the sides of the module.

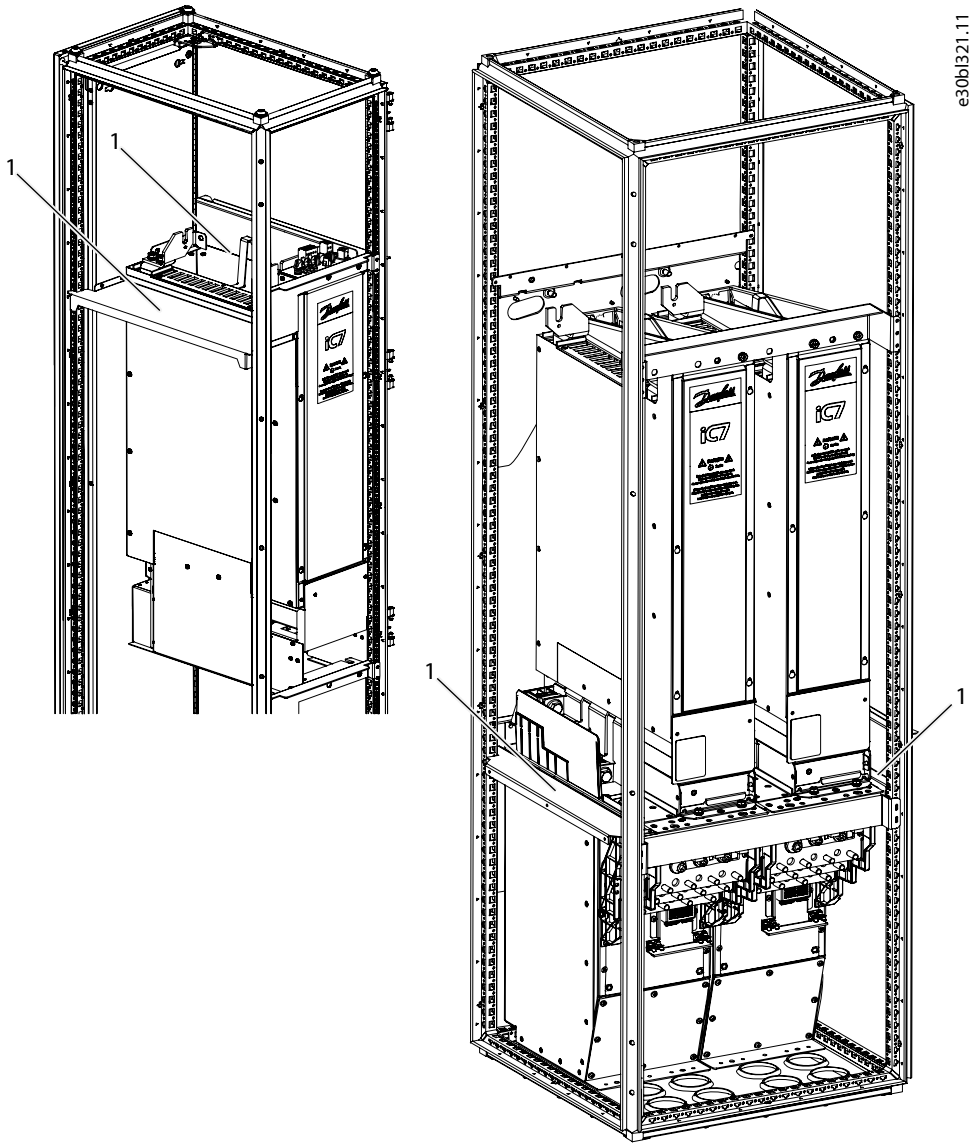

Figure 30: Air Guides of the Modules without Integration Unit (Left) or with Integration Unit (Right) in the Cabinet

1	Air guide

Danfoss Drives Oy © 2026.09

6 Electrical Installation Considerations

6.1 Cable Requirements

Follow these requirements for the mains and motor cables used in the drive system.

- Select and install mains cables and motor cables according to the local safety regulations, the input voltage, and the load current of the drive.
- Use motor cables rated for at least 70 °C (158 °F) surface temperature. If sufficient airflow at motor cable terminals in the cabinet cannot be ensured, use cables rated for 90 °C (194 °F). Consider the operating temperature of the mains terminals and make sure that the mains cables do not overheat near the input terminals.
- Use symmetrical power cabling with power units connected in parallel. Each power unit must have the same number of cables with an equal cross-section and equal length.

The maximum number of power unit cables and bolts sizes can be found in 10.4.1 General Cable Size Information.

Only use symmetrical and shielded 3-phase motor cables. See Figure 31. Do not use symmetrical and shielded 3-phase cable with individual shield for each phase conductor or single-core phase conductors and PE with or without shield, see Figure 32.

To reach C3 EMC performance, use shielded motor and mains cables and ensure 360° grounding of the motor and mains cable shield at both ends.

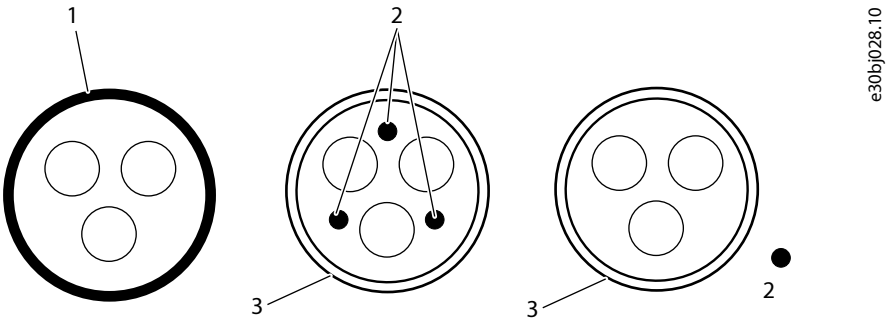

Figure 31: Recommended Cable Types for Mains and Motor Cabling

1	PE conductor and shield	2	PE conductor
3	Shield		

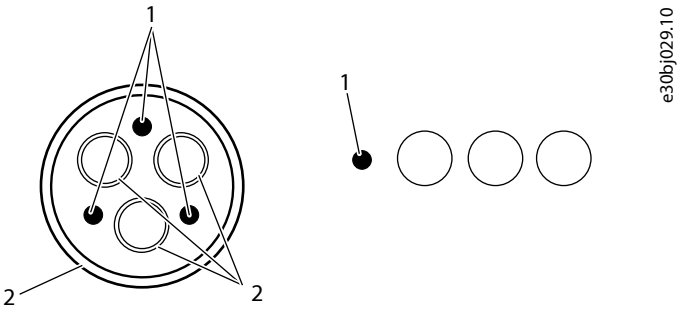

Figure 32: Not Recommended Motor Cable Types

1	PE conductor	2	Shield

6.2 Grounding Principles

Ground the product in accordance with applicable standards and directives.

According to IEC 60364-5-54; 543.1, unless local wiring regulations state otherwise, the cross-sectional area of the protective grounding conductor must be at least ½ times of the phase conductor and made of the same material when the phase conductor cross-section is above 35 mm^2 (AWG 2).

The connection must be fixed.

6.3 Grounding the Products

1. Ground the products at the grounding spots.

See 10.1 Tightening Torques.

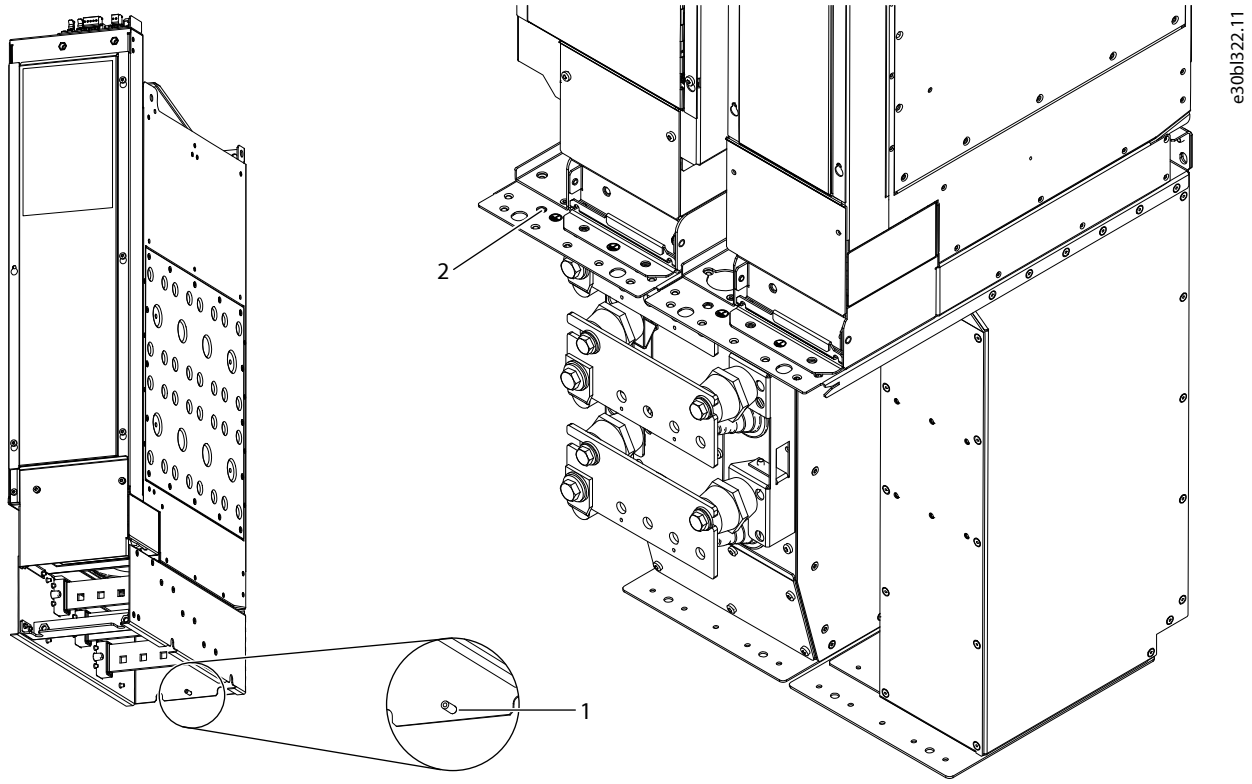

Figure 33: Grounding Stud of the System Module without Integration Unit and Grounding Terminal of the Filters and System Modules with Integration Unit

1	Grounding stud	2	Grounding terminal

6.4 Installing an NFE and an Inverter Module in C3 Environment

NOTICE

DAMAGE TO THE DRIVE FROM INCORRECT EMC LEVEL

The EMC level requirements for the drive depend on the installation environment. An incorrect EMC level can damage the drive.

- Before connecting the drive to the mains, make sure that the EMC level of the drive is correct for the mains.

When the combination of NFE and inverter modules is ordered as C3/C4, the default setting for the inverter is C4. When used with the NFE module, change the EMC level of the inverter module to C3.

With the combination of AFE and inverter modules, an HF filter is not required. Thus when ordered as C3/C4, the default setting is correct.

1. To change the setting of the inverter module to C3, change the parameter ***HF DC-link Filter Mode*** value to 1.

Danfoss Drives Oy © 2026.09

Do not use this setting in any other case.

6.5 Prerequisites for Cable Installation

Table 11: Minimum Distances from Motor Cables to Other Cables

Distance to other cables [m (ft)]	Length of the shielded motor cable [m (ft)]
0.3 (1.0)	≤ 50 (164)
1.0 (3.3)	≤ 150 (492)

1. Before starting, make sure that none of the components of the drive is live. Read all safety precautions in this guide and other documents available for this product.
2. Make sure that the motor cables are sufficiently far from other cables.
3. The motor cables must cross other cables at an angle of 90°.
4. If it is possible, do not put the motor cables in long parallel lines with other cables.
5. If the motor cables are in parallel with other cables, obey the minimum distances (see Table 11).
6. The distances are also valid between the motor cables and the signal cables of other systems.
7. The maximum length of shielded motor cables is 150 m (492 ft). If the used motor cables are longer, contact the vendor to get more information. The motor cable length is based on the maximum number of cables for each frame. For example, the 590 A inverter module is based on 3 parallel cables, and the 880 A inverter module on 4 parallel cables. The default motor cable operating capacitance is 0.75 nF/m. If some other cable type is used, or the number of cables connected in parallel does not match with recommendations, the maximum motor cable length must be derated so that the maximum total motor cable capacitance is not exceeded.
   a. Default maximum motor cable setup for IM11: 4x(3x120+70) mm^2, 150 m, 0.75 nF/m → CTOT = 4 x 150 m x 0.75 nF/m = 450 nF = CMAX
   b. Example where the number of motor cables connected in parallel is higher than the default: 6x(3x120+70) mm^2, 100 m, 0.75 nF/m → CTOT = 6 x 100 m x 0.75 nF/m = 450 nF = CMAX
   c. Example where the motor cable capacitance is higher than the default: 4x(3x120+70) mm^2, 130 m, 0.85 nF/m → CTOT = 4 x 130 m x 0.85 nF/m = 442 nF < CMAX
8. The maximum cable length of the filters is also 150 m (492 ft).
9. Only use symmetrical and shielded motor cables.
10. Use symmetrical power cabling with power units connected in parallel. Each power unit must have the same number of cables with an equal cross-section and equal length.
11. Perform the cable insulation checks if necessary.

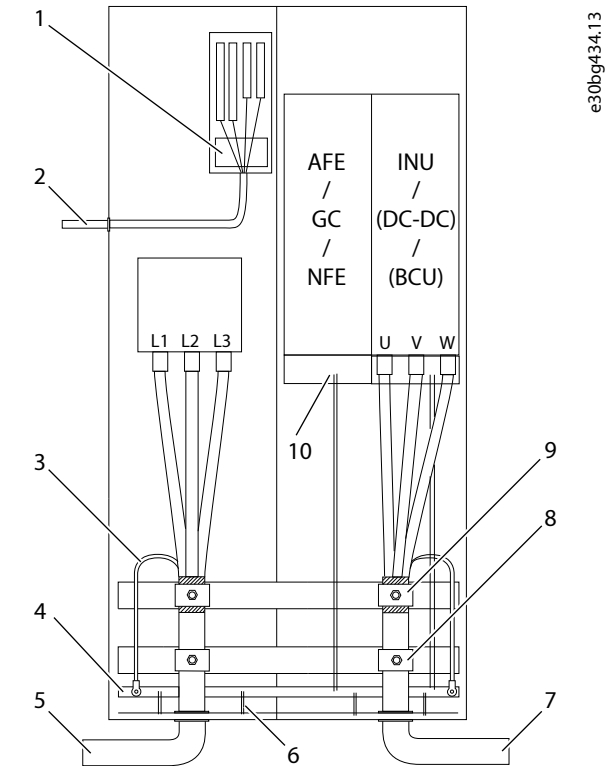

Figure 34: Cabling Principle

1	Grounding of the control cable	2	Control cable
3	Grounding conductor	4	PE busbar
5	Mains cables	6	Grounding of the enclosure
7	Motor cables	8	Strain relief
9	The grounding clamp, 360° grounding	10	Grounding of the system module to the PE busbar

6.6 Recommended Installation of Motor Cables

If the power units are connected in parallel without output filters or only with a common-mode filter, the recommended common coupling point of motor cables is at the motor terminals. It is also possible to use an alternative installation method where the common coupling point of the motor cables is near the drives. In this case, to avoid current imbalance, the installation must be symmetrical and the tolerance of cable length (impedance) to common coupling point is maximum 5%. If the cable connections are not symmetrical, use a dU/dt filter or a sine-wave filter.

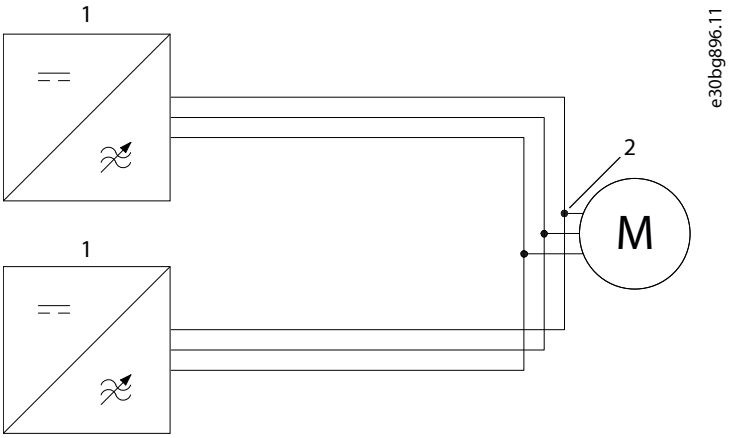

Figure 35: Recommended Installation

Danfoss Drives Oy © 2026.09

1	Inverter module	2	Common coupling point at the motor terminals

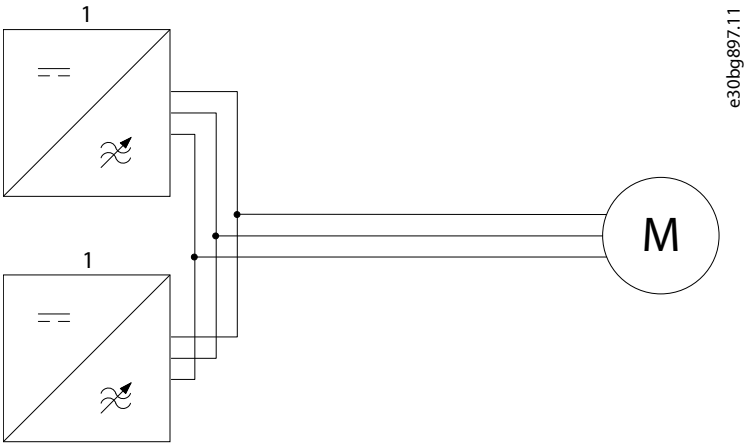

Figure 36: Alternative Installation Method

1	Inverter module

6.7 Cable Requirements for the LCL Filter Fan Supply

⚠ WARNING

The LCL Filter fan supply is protected with internal fuses. Use external fuses if the local safety regulations or installation conditions require fuse protection.

Table 12: DC-link Voltage Supply

Item	Value
Maximum load current	2 A
Maximum voltage	05: 740 V DC 07: 1100 V DC

Table 13: Connector X121

Item	Value
Connector	Wago, 831-3103/037-000
Maximum wire insulation diameter	7 mm (0.3 in)
Wire stripping length	14 mm (0.6 in)
Conductor size	Maximum 10 mm^2/AWG 8
Fine-stranded conductor	Ferrule maximum 6 mm^2

Table 14: Cable Requirements

Area	Requirements	Example wire
IEC	Voltage class 05: Minimum 800 V DC Voltage class 07: Minimum 1100 V DC Minimum current 2 A	Leoni BETAtrans® 4 GKW-ENX R 1800 V M, 1x2.5 mm^2, order number 312474
UL	Minimum 600 V Minimum size AWG14 Minimum rated for 80 °C (176 °F)	UL AWM style 10269, AWG14

6.8 Connecting the LCL Filter Fan Supply

To enable the functioning of the LCL Filter fan, do these steps.

⚠ WARNING

The LCL Filter fan supply is protected with internal fuses. Use external fuses if the local safety regulations or installation conditions require fuse protection.

⚠ WARNING



SHOCK HAZARD FROM THE COMPONENTS

The components of the drive are live when the drive is connected to mains.

- Do not make changes in the drive when it is connected to mains.

1. Consider ambient temperature and other installation conditions.
2. Refer to the local safety regulations.
3. Protect the installation against mechanical and environmental damage and use strain relief when necessary.
4. Connect the DC-link voltage supply from the DC link to the LCL Filter connector X121.

   Pay attention to the correct polarity.

   Do not connect the supply between the AFE module and the DC fuses. The supply connection point is after the AFE module fuses.

Danfoss Drives Oy © 2026.09

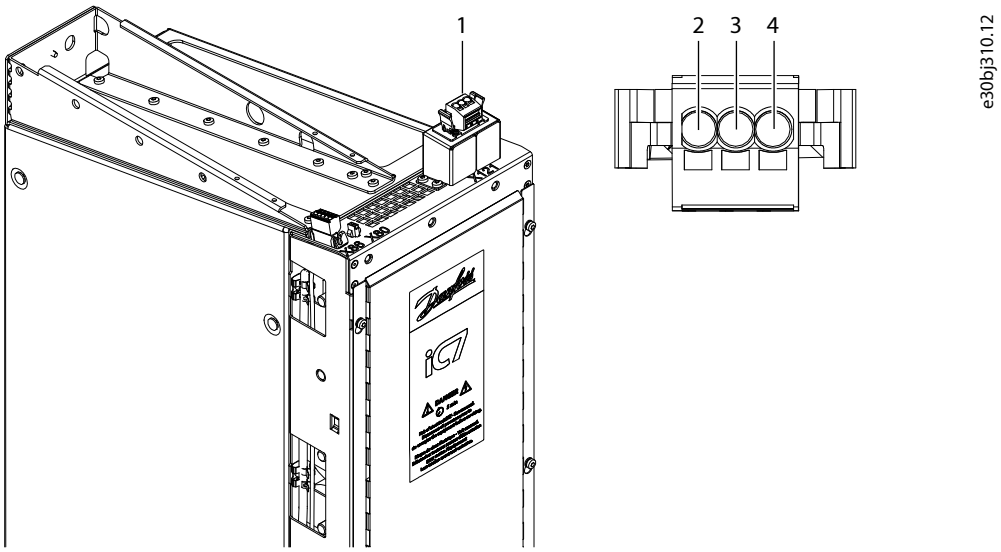

Figure 37: Fan Supply Connector of the LCL Filter

1	Fan supply (X121)	2	Voltage class 05: 465–740 V DC (+), voltage class 07: 640–1100 V DC
3	Empty	4	0 V DC (-)

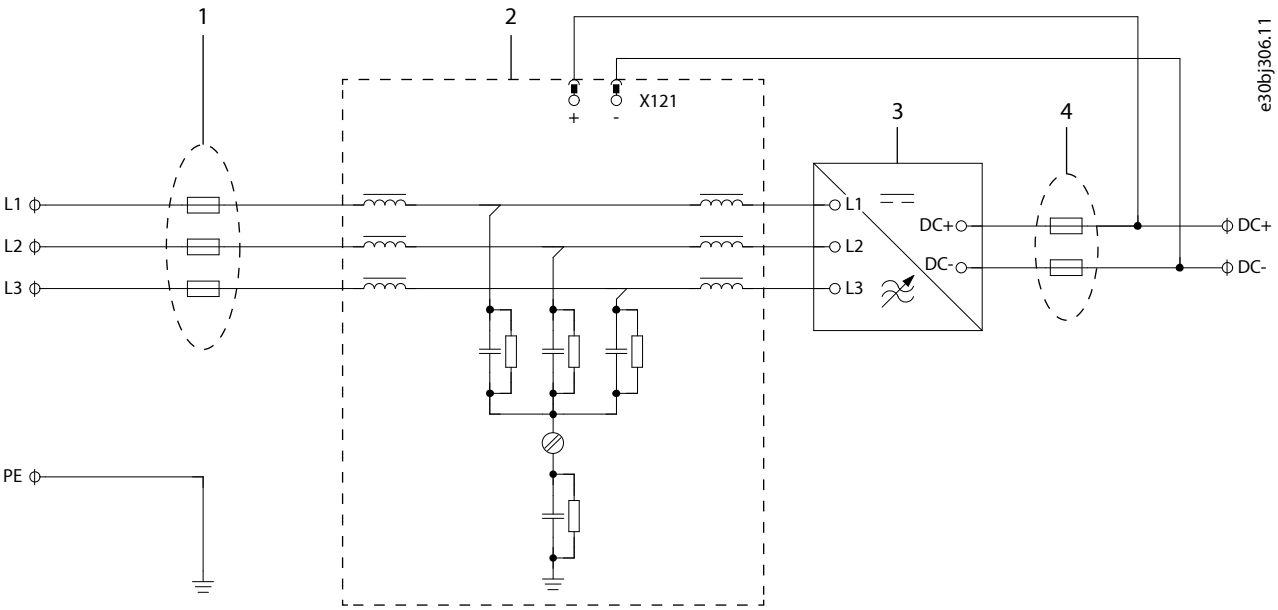

Figure 38: Diagram of the LCL Filter Fan Supply

1	AC fuses	2	LCL Filter
3	AFE module	4	DC fuses

6.9 Installation in an IT System

6.9.1 Installation of NFE Modules in an Impedance-grounded (IT) System

If the mains is impedance-grounded (IT), the drive must have the EMC protection level C4. If the drive has the EMC protection level C3, it is necessary to change it to C4.

These instructions apply for the NFE modules. If the grid capacitance is above 100 nF, continuous operation during motor-side IT ground fault is not allowed, because a large fault current is circulating in the system.

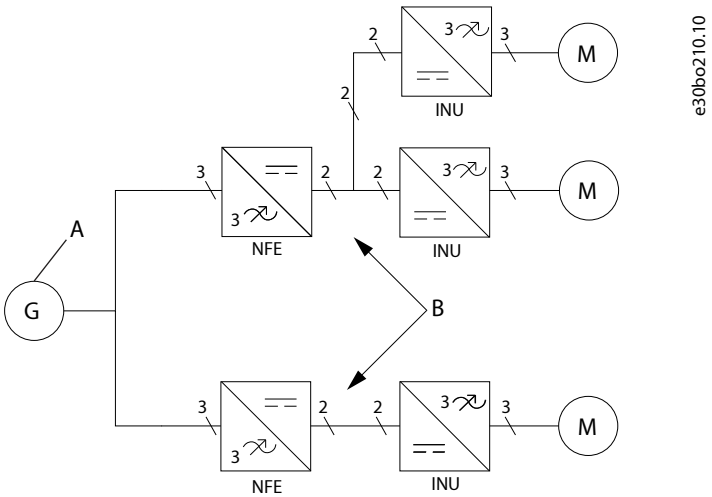

Figure 39: NFE Modules in IT System

A	AC grid, floating	B	Separate DC links

6.9.2 Installation of AFE Modules in an Impedance-grounded (IT) System

If the mains is impedance-grounded (IT), the drive must have the EMC protection level C4. If the drive has the EMC protection level C3, it is necessary to change it to C4.

These instructions apply to the AFE modules. To change the EMC protection level of the drive from C3 to C4, disconnect the LCL Filter ground capacitor.

In a non-dedicated IT system, it is recommended to leave the LCL Filter ground capacitors connected in each AFE to limit conducted high-frequency disturbances between devices across the system. A non-dedicated IT system is defined here as a network where several separate DC links are fed from the same AC supply.

If the LCL Filter ground capacitors are connected, continuous operation during a motor-side IT ground fault is not allowed, because a large fault current is going through the capacitors.

In common DC bus installations with common-mode voltage sensitive equipment such as energy storages, it is recommended to have ground capacitors on the DC bus side (DC+ to PE and DC- to PE) to balance the DC-bus voltage against ground. In this case, the AC side ground capacitors should be disconnected. The ground capacitors should be sufficiently larger than the system parasitic capacitance to ground to be effective in limiting the common-mode voltage peaks.

As a rule-of-thumb:

- 10 x system parasitic capacitance ~ 100 V common-mode voltage to ground
- 100 x system parasitic capacitance ~ 10 V common-mode voltage to ground

Continuous operation during ground fault when DC side ground capacitors are connected is not allowed due to potentially large fault currents.

Danfoss Drives Oy © 2026.09

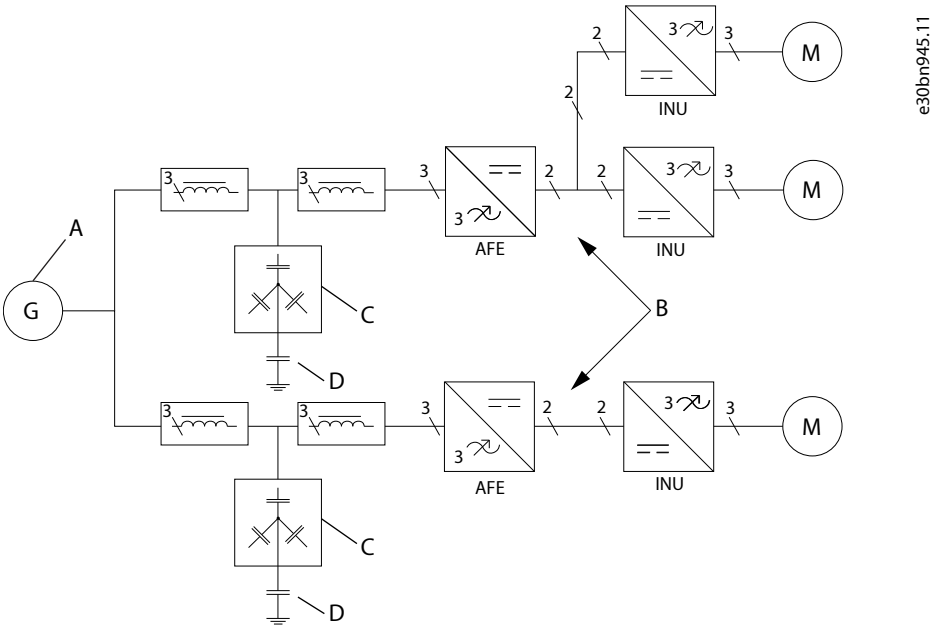

Figure 40: AFE Modules in IT System

A	AC grid, floating	B	Separate DC links
C	Filter capacitors	D	Ground capacitor/capacitors on the LCL Filter side

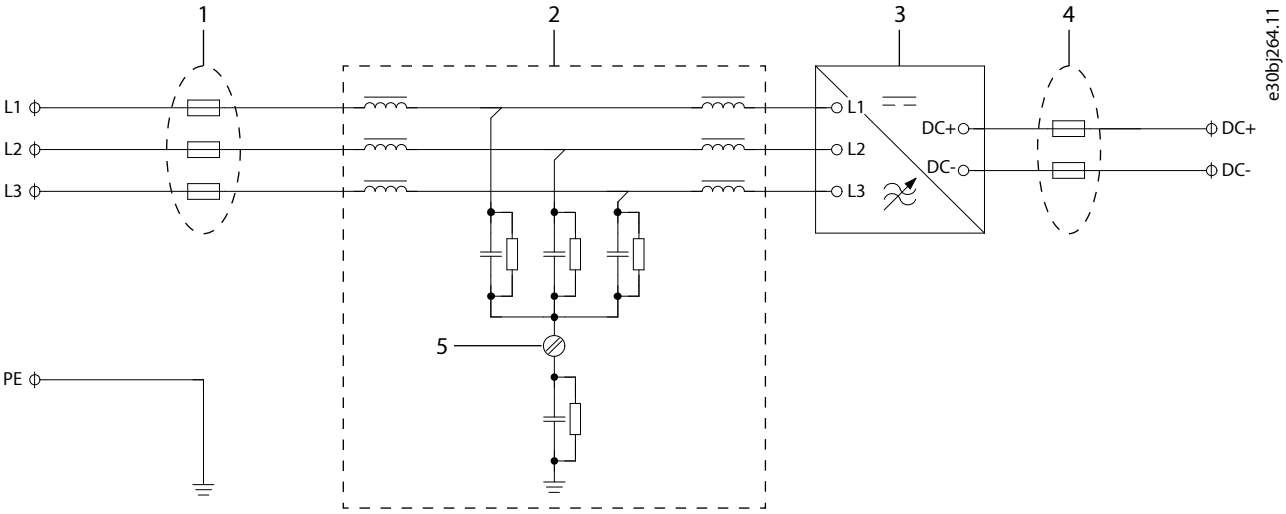

Figure 41: Diagram of the LCL Filter

1	AC fuses	2	LCL Filter
3	AFE module	4	DC fuses
5	The grounding wire		

6.9.3 Changing the EMC Protection Level of the NFE Module in an IT System

In an IT system, to change the EMC protection level of the drive from C3 to C4, disconnect the HF capacitors of the inverter module, and disconnect the EMC board ground capacitor of the NFE module.

1. Go to MyDrive® Insight or use the control panel.
2. Change the parameter ***HF DC-link Filter Mode*** value of the inverter module to 0.

3. In the NFE module, disconnect the EMC board ground capacitor by detaching the jumper.

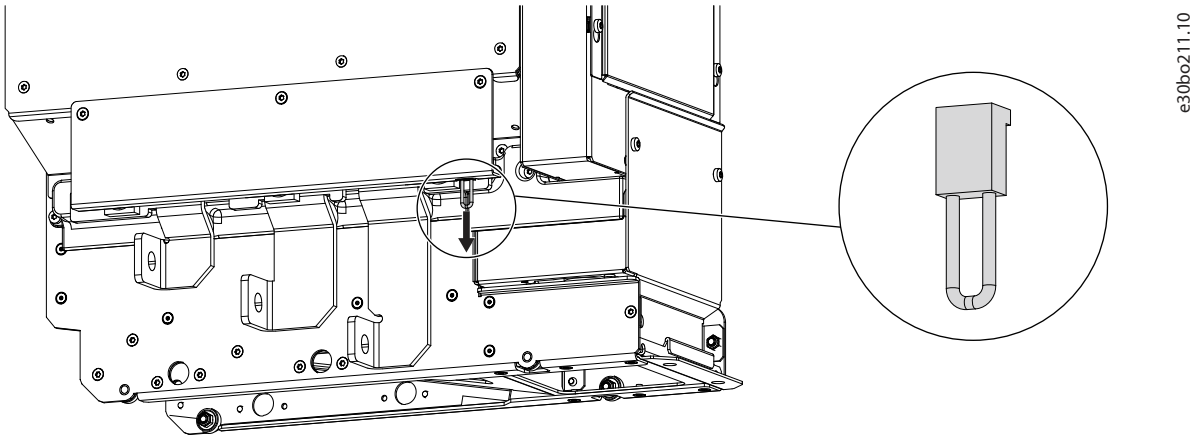

Figure 42: Detaching the Jumper

6.9.4 Changing the EMC Protection Level of the AFE Module in an IT System

In an IT system, to change the EMC protection level of the drive from C3 to C4, disconnect the LCL Filter ground capacitor.

NOTICE

DAMAGE TO THE DRIVE FROM INCORRECT EMC LEVEL

The EMC level requirements for the drive depend on the installation environment. An incorrect EMC level can damage the drive.

- Before connecting the drive to the mains, make sure that the EMC level of the drive is correct for the mains.

1. Loosen the screw of the grounding wire of the capacitor of the LCL Filter.
2. Remove the grounding wire from the phase capacitor.

Danfoss Drives Oy © 2026.09

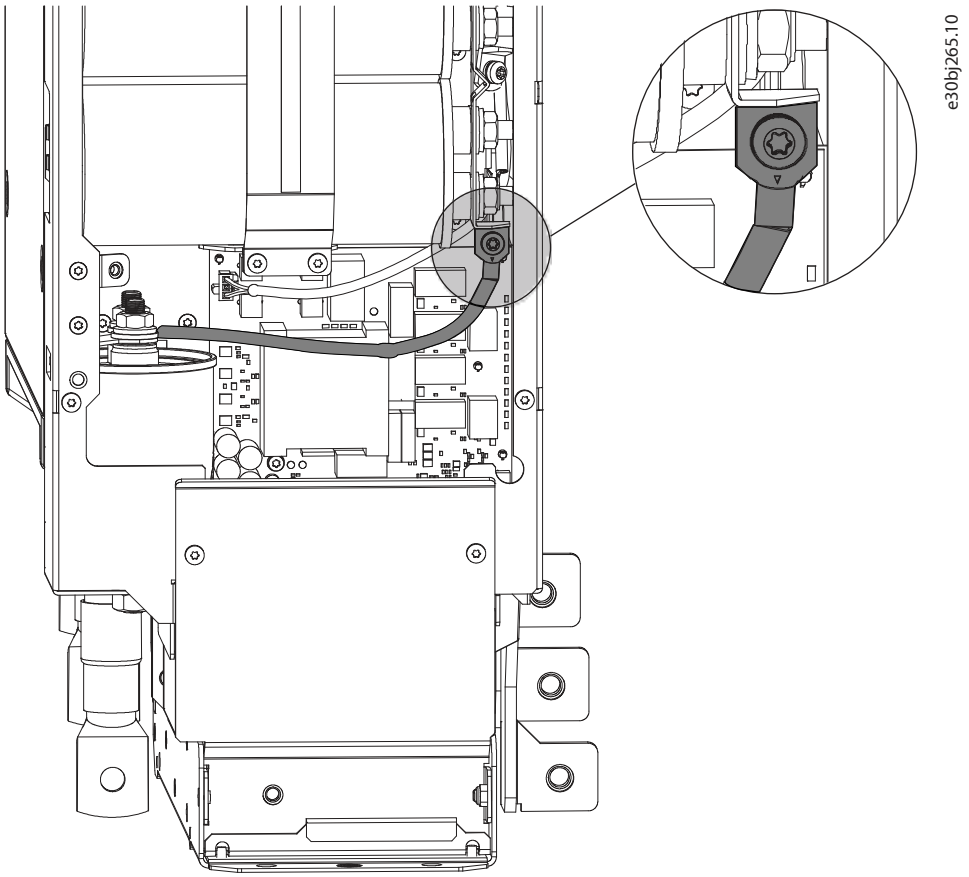

Figure 43: EMC Protection Level 3

3. Move the cable lug of the grounding wire with the screw onto the insulator and tighten the screw (maximum 0.5 Nm, 4.4 in-lb).

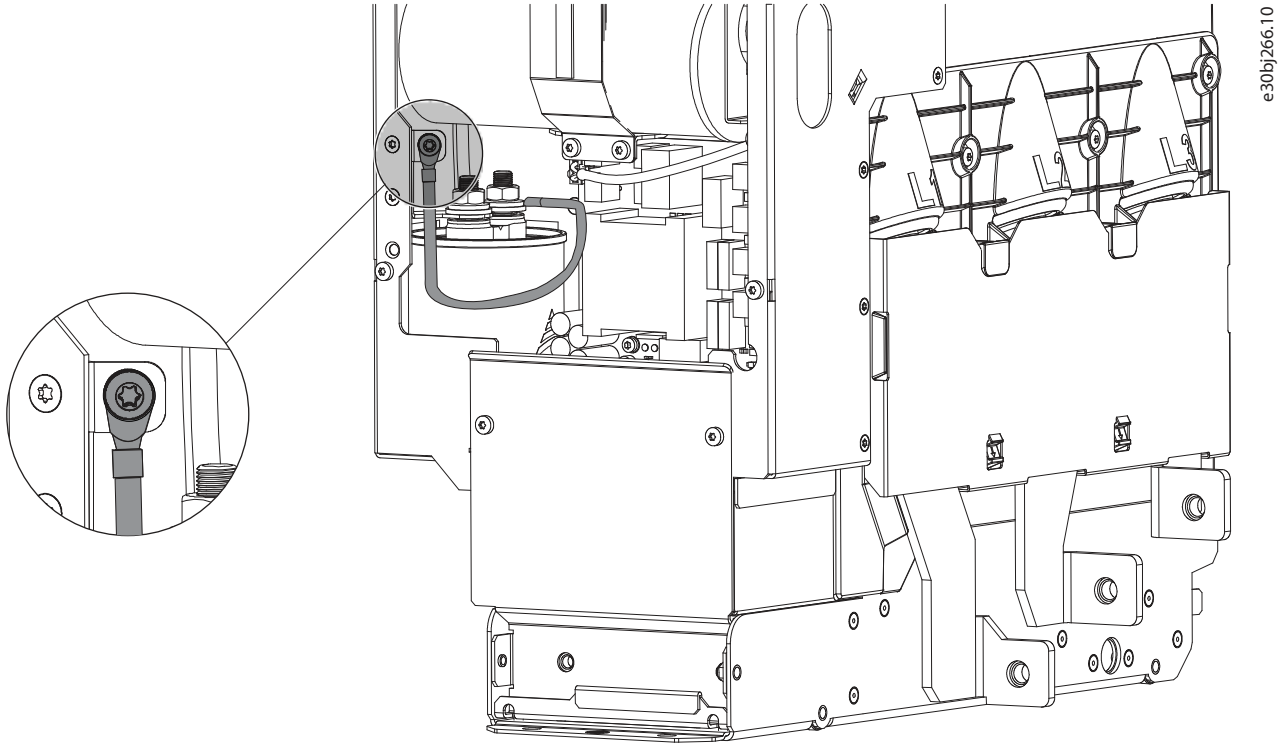

Figure 44: EMC Protection Level 4

4. After the change, write "The EMC level was changed" and the date on the "product modified" label. If the label is not yet attached, attach it on the drive near the product label.

6.10 Fuses of the Drive System

The front-end modules in the drive system must be equipped with fast-acting AC fuses to limit the damage of the drive system. The fuse sizes are based on class aR fuses. Use these fuses to achieve sufficient protection against short circuits.

DC fuses must be installed in all system modules to limit the short-circuit current in fault situations. Each DC supply line must be equipped with fuses. The fuse sizes are based on class aR fuses. The DC fuses can be provided with the delivery as option. Do not replace the DC fuses with any other types.

The protective devices must be integrated within the same overall assembly as the system module. The fuse tables can be found in 10.5.1 List of Fuse Size Information.

Fuse ratings are based on a maximum fuse ambient temperature of 55 °C (131 °F) and at least 3 m/s airflow.

To ensure fuse performance, make sure that the available supply short-circuit current is sufficient. See minimum required values ($I_{cp,mr}$) at the fuse location in the tables of AC Fuses for NFE/AFE in 10.5.1 List of Fuse Size Information.

The AC fuses of the NFE/AFE module are delivered separately. See installation instructions in the *iC7 Series Air-cooled System Modules Installation Guide*.

Branch-circuit protection requirements for North America

A UL 489/CSA C22.2 No. 5 listed circuit breaker, or a UL 248/CSA C22.2 No. 106 listed fuse must be provided in the branch circuit supplying this equipment. Select the overcurrent protective device according to the rated supply voltage and rated current of the drive. The overcurrent protective device must have a minimum interrupting rating of 100 kA to meet the maximum SCCR rating of the equipment.

This equipment is equipped with supplementary semiconductor-protection fuses. Therefore, the branch-circuit overcurrent protective device is not required to provide semiconductor-specific protection. All short-circuit protection for the supply conductors must comply with applicable local electrical regulations (for example, NEC in the United States or CEC in Canada).

6.11 Guidelines for DC Connections of System Modules

The DC busbars and cabling must be dimensioned according to local installation regulations and codes, so that the cross-section is sufficiently large for the current flowing at the relevant point. See the DC current ratings in 10.6.1 General Current Rating Information.

The DC busbar itself must be designed to attain the lowest possible inductance.

Adequate fuse protection for the drive configuration must be provided on the line side and on the DC side. The power cables and busbars must be dimensioned with sufficient thermal and mechanical strength to handle short circuits in the system. See the fuse ratings in 10.5.1 List of Fuse Size Information.

Danfoss Drives Oy © 2026.09

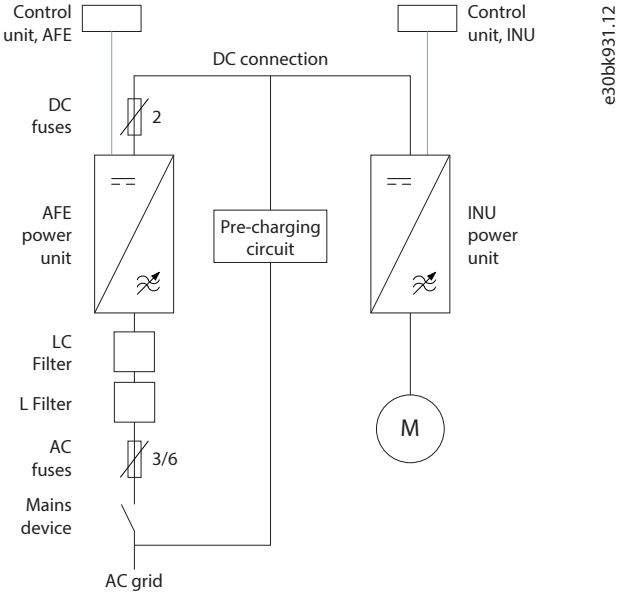

Figure 45: DC Connections of Single AFE Power Units

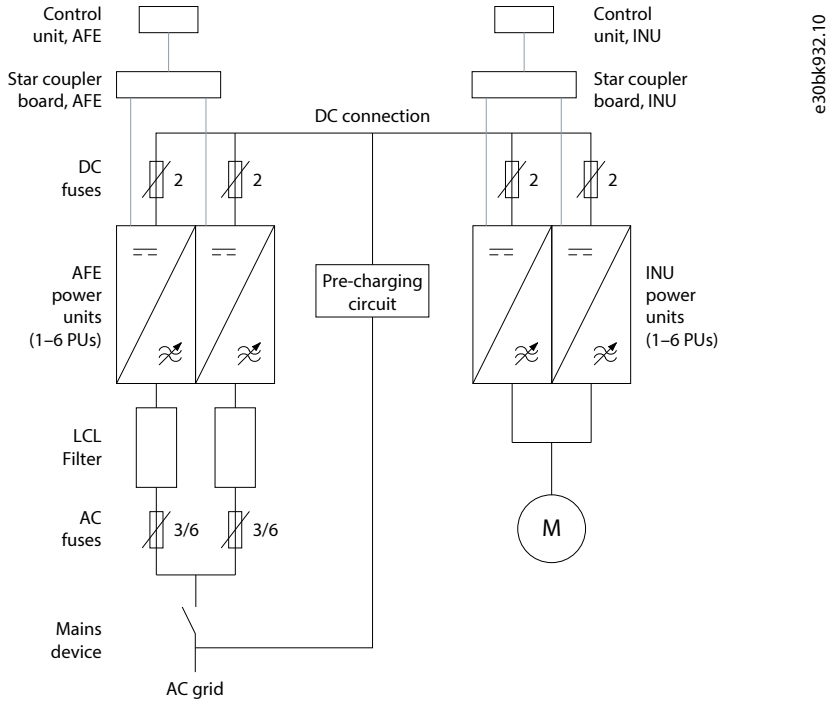

Figure 46: DC Connections of Parallel AFE Power Units

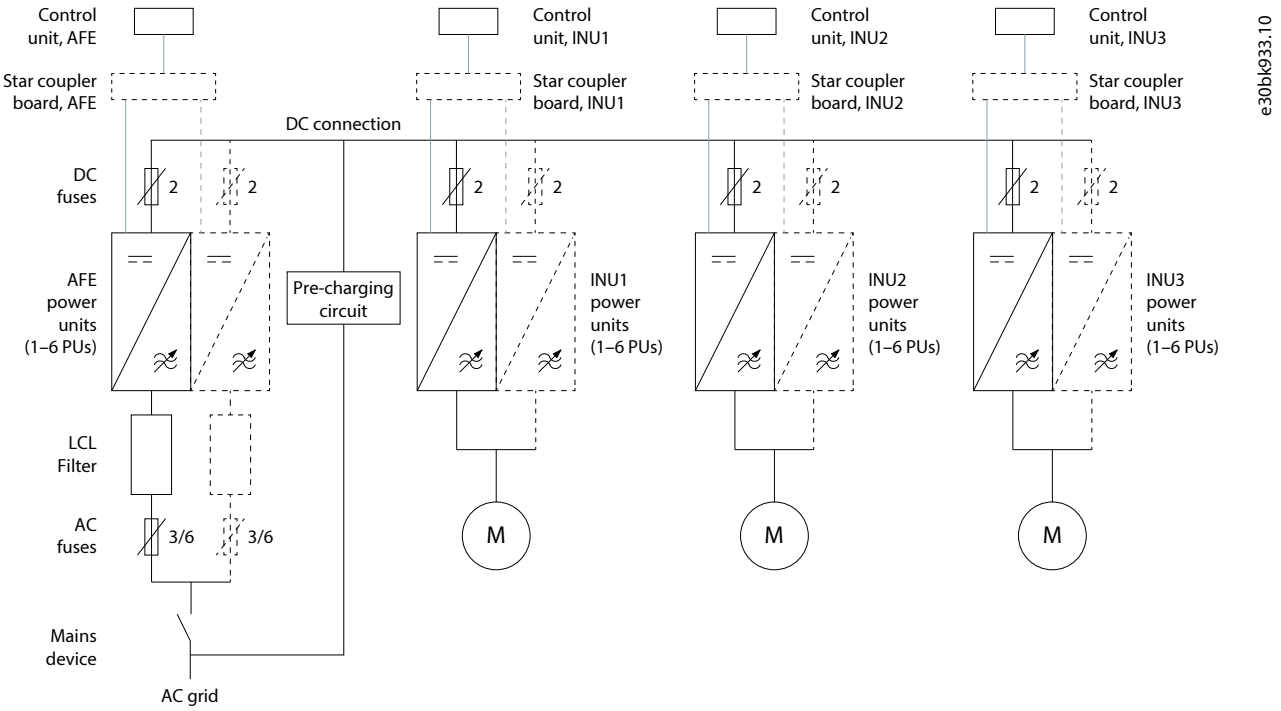

Figure 47: DC Connections of an AFE Drive Lineup

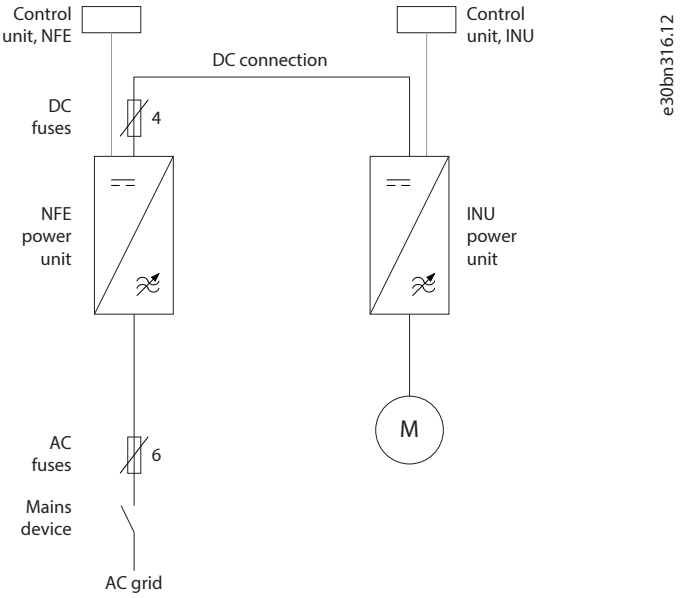

Figure 48: DC Connections of Single NFE Power Units

Danfoss Drives Oy © 2026.09

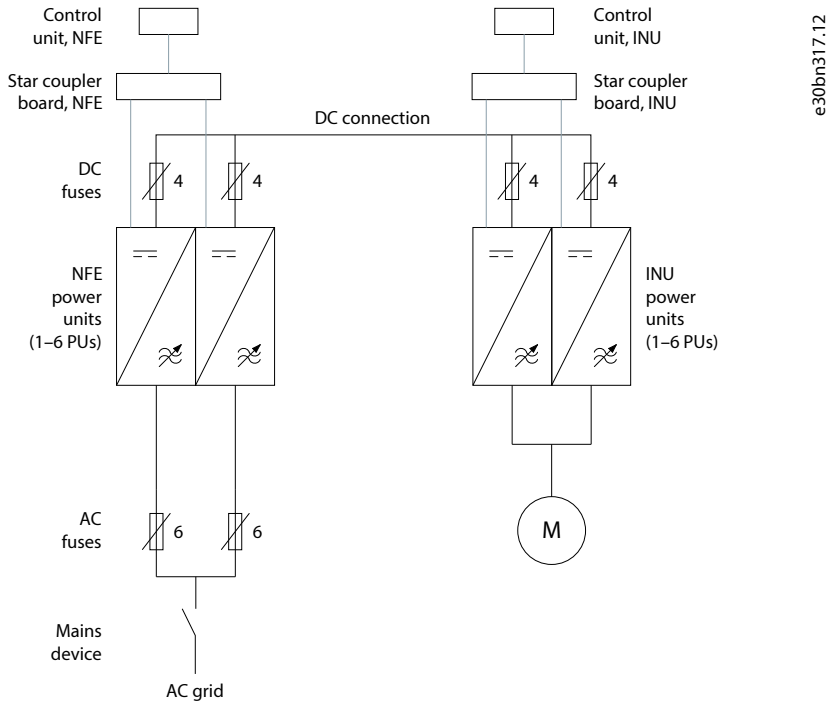

Figure 49: DC Connections of Parallel NFE Power Units

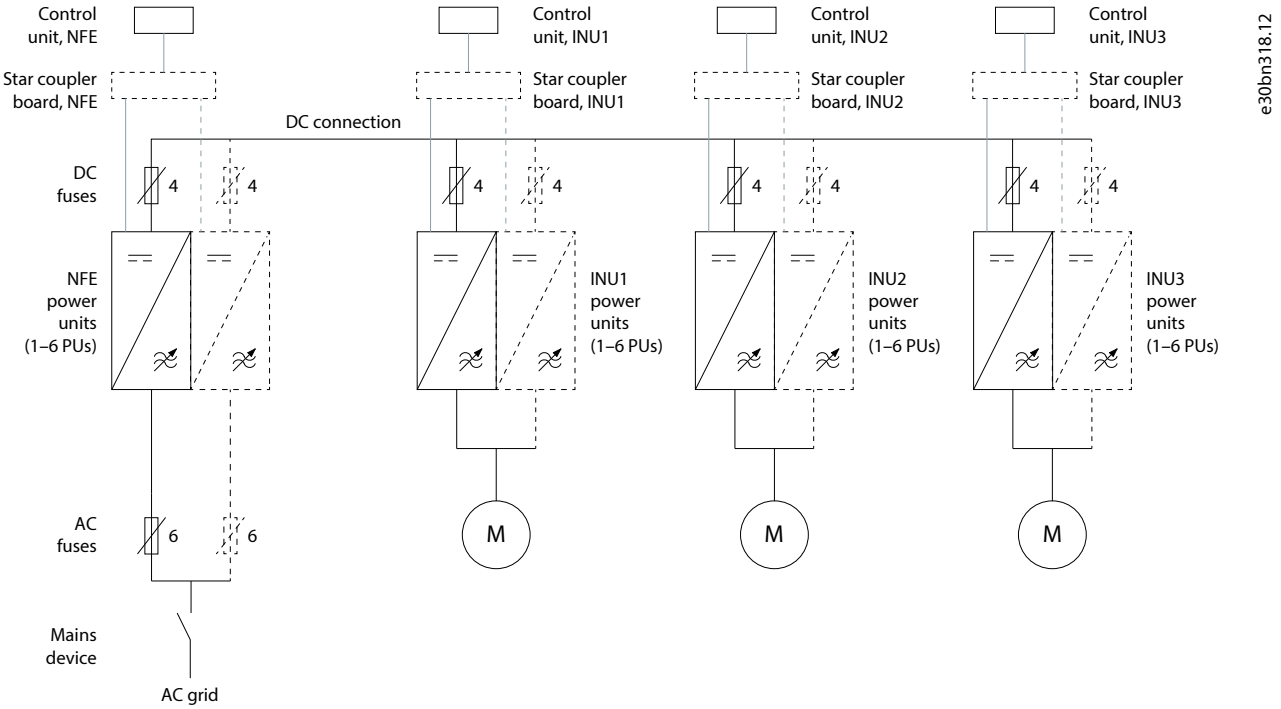

Figure 50: DC Connections of an NFE Drive Lineup

NOTICE

RISK OF OVERHEATING DUE TO DISABLING A MODULE

When several modules are connected in the same DC link, and there is a fault in one of the modules, the faulty module can be disabled from the DC link.

If an AFE or inverter module has been disabled due to a fan fault or a fan power supply fault, the power components can overheat. All NFE modules can overheat when disabled from the DC link. This can result in equipment damage and the loss of intended thermal protection.

- Physically isolate the faulty module and the NFE module from the energized DC bus by removing the DC fuses.

6.12 Terminals of the System Modules

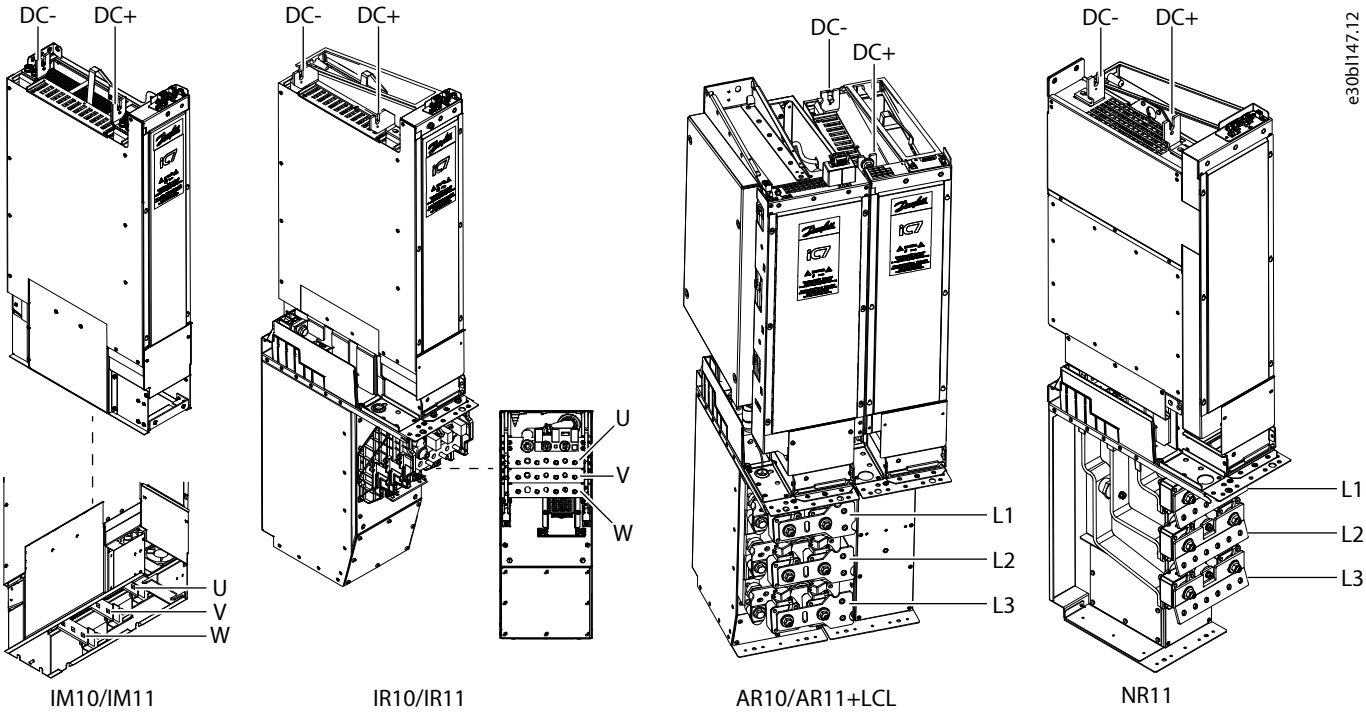

Figure 51: Locations of the Terminals on the System Modules

6.13 Auxiliary Power Connection of the Power Unit

IMPORTANT:

The terminals at the top of the system module have been updated. Both the versions of the terminals are shown below. If servicing a module with the older terminals, connect the 24 V service voltage to terminals X80 and X67.

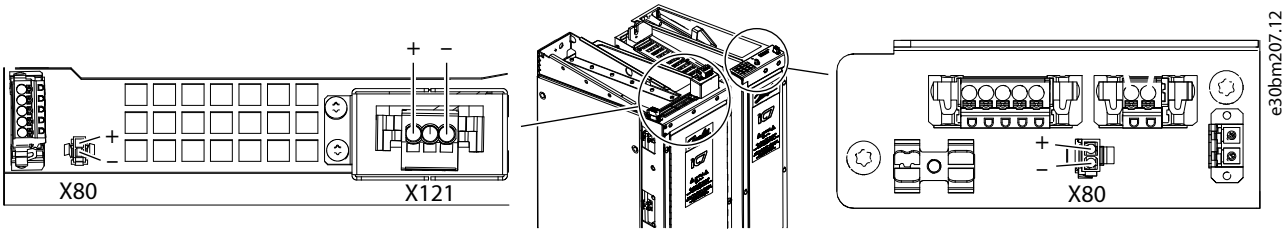

Figure 52: Service Voltage Terminals of the LCL Filter and the System Module (NFE, AFE, INU, GC)

Danfoss Drives Oy © 2026.09

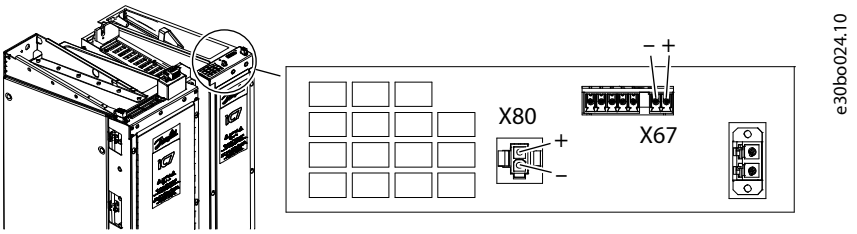

Figure 53: Previous Revision of the Service Voltage Terminals

X25	AuxBus terminal	X80	Service 24 V DC supply terminal
X81	Control terminal	X67	24 V DC output terminal

The service 24 V DC supply terminal X80 for the power unit and with older terminals, also the output terminal X67, are used for service purposes. When there is a 24 V DC power, it is possible to update the firmware, do commissioning checks, or check node communication.

The power supply is a GND referenced, +24 V DC ±5%, 40 W supply which is also used for powering the AuxBus. The AuxBus topology and connection points are described in 6.14.2 AuxBus Cable Requirements. The power supply is recommended and designed for powering the control unit and options of the system module.

Servicing a module with older terminals

For service and commissioning procedures, connect 24 V DC supply to both terminals **X80 and X67**. After the tasks are completed, disconnect the 24 V DC supply.

The 24 V DC output terminal X67 provides power supply and AuxBus connectivity for the system module.

Connector type	Molex Mini-Fit Jr. Receptacle Housing, dual row, 2 circuits, part number: 39012025
Terminal type	Molex Mini-Fit Female Crimp Terminal, part number: 39000039 (bag)

The recommended connector is 1769919/Phoenix Contact. The correct tightening torque is 0.22–0.25 Nm (1.9–2.2 in-lb).

Servicing a module with updated terminals

For service and commissioning procedures, connect 24 V DC supply to terminal **X80**. After the tasks are completed, disconnect the 24 V DC supply.

Connector type	Molex Mini-Fit Jr. Receptacle Housing, dual row, 2 circuits, part number: 39012025
Terminal type	Molex Mini-Fit Female Crimp Terminal, part number: 39000039 (bag)

The recommended connector for terminal X67 is Wago 2-pole female plug (172Z0289), and for terminal X25 Wago 5-pole female plug (172K9710). The correct tightening torque is 0.22–0.25 Nm (1.9–2.2 in-lb).

6.14 AuxBus Communication

6.14.1 Usage of AuxBus

AuxBus enables communication for the filters. When AuxBus is connected, the drive provides temperature monitoring and other diagnostics of the used options thus giving vital information about the system. AuxBus is also used to create warning and fault signals for the system.

The AuxBus network topology is a 2-wire CAN-based bus line terminated at both ends by resistors. The connection includes a feedback loop wire which disables automatic termination in the AuxBus board. The last AuxBus board automatically enables termination when feedback is not present. Additional termination resistors are not necessary.

NOTICE

For the drive to be able to protect the filters, AuxBus must be connected.

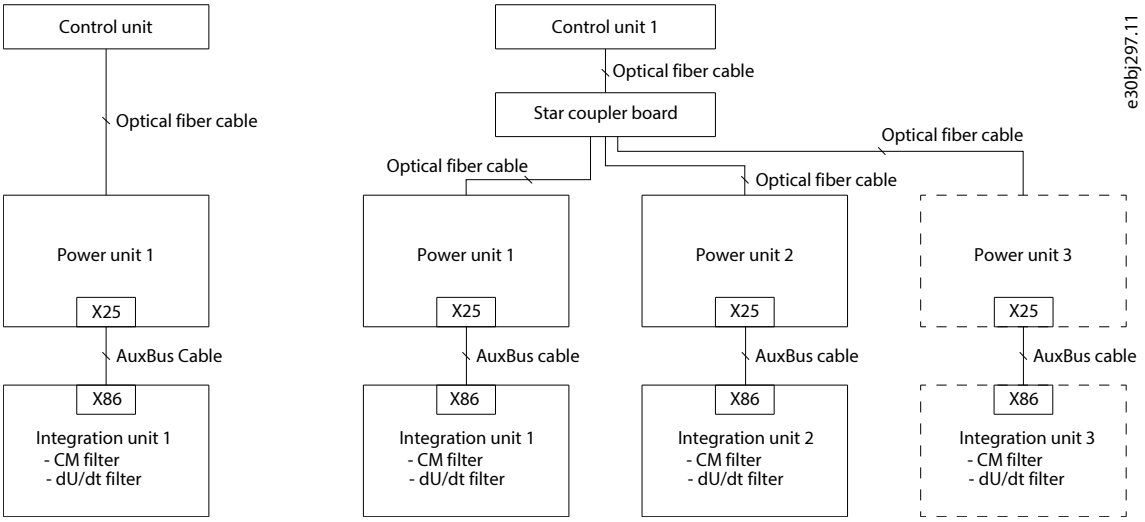

Figure 54: AuxBus Topology for Inverter Modules

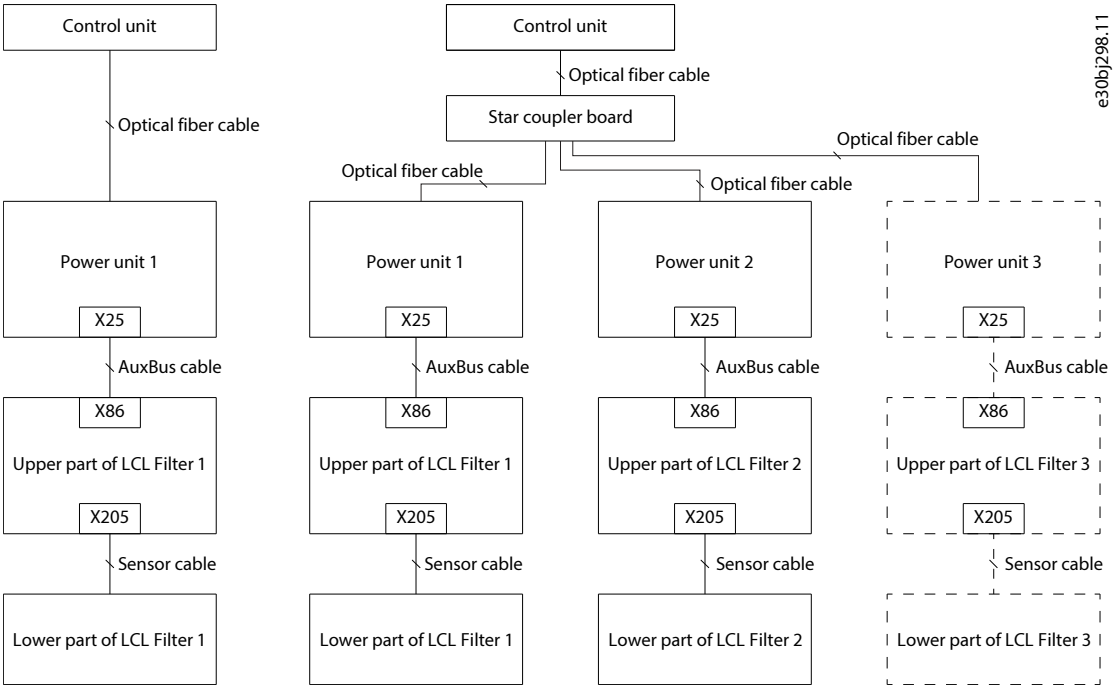

Figure 55: AuxBus Topology for AFE Modules and LCL Filters

6.14.2 AuxBus Cable Requirements

It is recommended to use the AuxBus cables that are provided by Danfoss. AuxBus is delivered with 3 m (10 ft) of cable. If other cables are used, see Table 15.

Danfoss Drives Oy © 2026.09

NOTICE

RISK OF ELECTRICAL INTERFERENCE

AuxBus consists of point-to-point connection, but the signals are connected in series. Cables that are longer than 10 m (33 ft) can create interference and communication problems.

- Do not exceed 10 m (33 ft) of total AuxBus cabling.
- Keep AuxBus cables as short as possible and separate them from high-power cables.

Table 15: Cable Requirements for Other than Danfoss-provided Cables

Item	Value
Cable type	6-wire, shielded and twisted pair (STP)
Impedance	120 Ω
Maximum length	10 m (33 ft)

Cable (example): LAPP KABEL, UNITRONIC® BUS LD FB P, 2170215.

Cable (example, UL): LAPP KABEL, UNITRONIC® BUS LD FB P A, 2170815.

Connector:

- For older terminals: Phoenix Contact, MC 1,5/ 5-ST-3,5 BK, 1769919. See 6.13 Auxiliary Power Connection of the Power Unit.
- For updated terminals: Wago 5-pole female plug (172K9710).
- LCL Filter: 2721-105/026-000.

6.14.3 AuxBus Grounding Principles

To ensure robust communication, a good grounding strategy is needed. Below is a recommended grounding strategy illustrated using integration units. Same strategy can be applied for loose option filters.

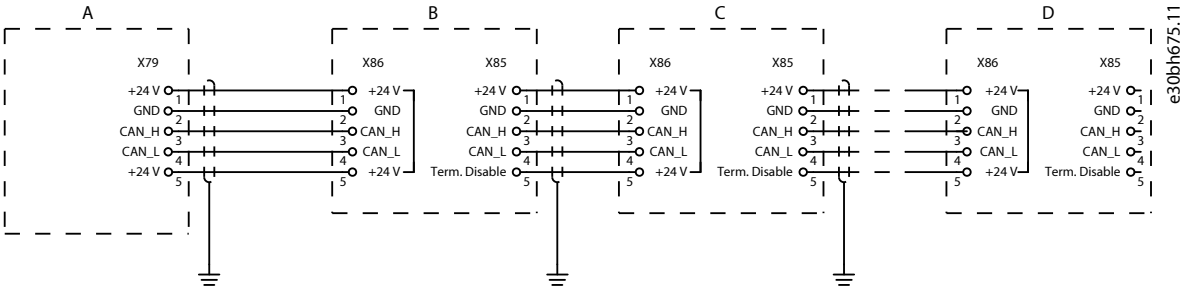

Figure 56: AuxBus Circuit Diagram

A	The AuxBus interface in the power unit	B	AuxBus board 1
C	AuxBus board 2	D	AuxBus board 3

6.14.4 AuxBus Terminals of the LCL Filter and the Integration Unit

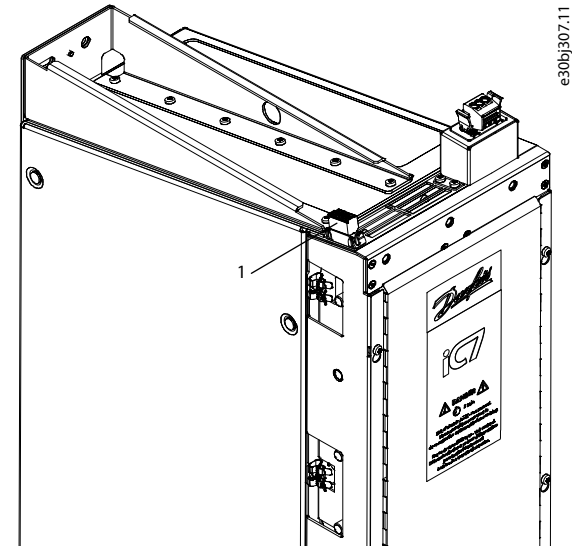

Figure 57: AuxBus Terminals of the LCL Filter

1	AuxBus in (X86)

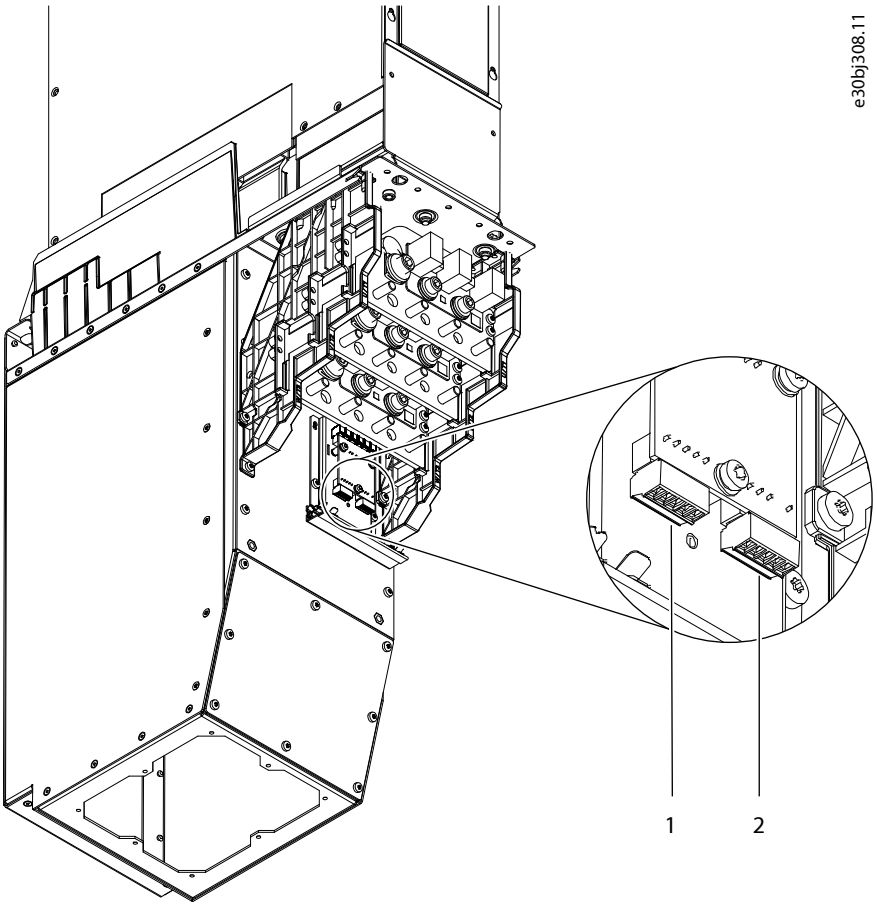

Figure 58: AuxBus Terminals of the Integration Unit

1	AuxBus out (X85)	2	AuxBus in (X86)

Danfoss Drives Oy © 2026.09

7 Options and Accessories for the Air-cooled System Modules

7.1 dU/dt Filter

The nominal switching frequency with the dU/dt Filter:

- 500 V: 3 kHz (DPWM)
- 690 V: 2 kHz (DPWM)

The maximum switching frequency with the dU/dt Filter:

- 500 V: 10 kHz (DPWM)
- 690 V: 6 kHz (DPWM)

The dU/dt Filter can be used without derating up to 70 Hz. For output frequencies higher than 70 Hz, current must be derated according to the curve shown in Figure 59. Above 120 Hz, a special high-speed filter is recommended.

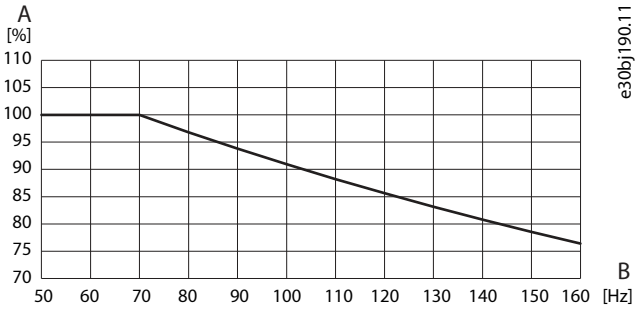

Figure 59: Output Frequency Derating

A	Allowed current	B	Output frequency

Maximum motor cable length depends mainly on switching frequency, DC-link voltage, and motor cable setup. In nominal conditions, the maximum motor cable length is 150 m (492 ft). The motor cable length is based on the maximum number of cables for each frame. For example, the limits for a 590 A filter are based on 3 parallel cables, and for an 880 A filter on 4 parallel cables. The default motor cable operating capacitance is 0.75 nF/m. If another cable type is used, or the number of cables connected in parallel does not match the recommendations, the maximum motor cable length must be derated so that the maximum total motor cable capacitance is not exceeded.

Losses are higher in the low output frequency range (0–5 Hz). If drives are operating in this range, the maximum motor cable length (capacitance) must be derated 10%.

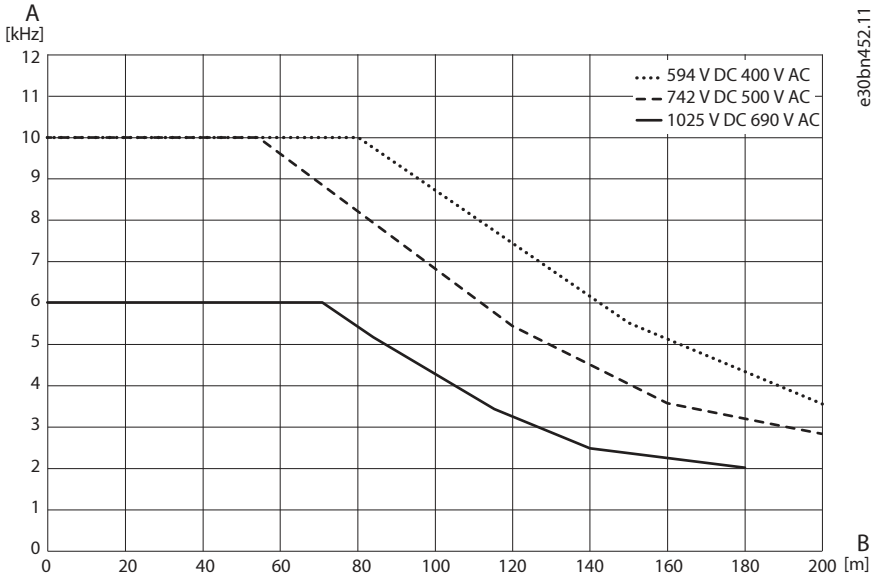

Figure 60: Safe Operating Area of the dU/dt Filter OF7U1

A	Switching frequency	B	Default cable length

The safe operating curves for dU/dt filters are shown in Figure 60. The motor cable length is based on the default cabling of the matching drive. If there are multiple cables, the actual cable capacitance is the sum of each cable capacitance. It is assumed that the default cable type has a capacitance of 75 nF/100 m. If other cabling arrangement is used than the default, the maximum cable length must be derated so that the given total cable capacitance of safe operating curves are not exceeded.

7.2 Common-mode Filter

With the Common-mode Filter, the nominal switching frequency is 3 kHz DPWM. The maximum switching frequency is 6 kHz DPWM at 690 V and 10 kHz DPWM at 500 V. The Common-mode Filter can operate in the whole output frequency range of the drive.

The maximum motor cable length depends mainly on switching frequency, DC-link voltage, and motor cable setup. In nominal conditions, the maximum motor cable length is 150 m (492 ft). The motor cable length is based on the maximum number of cables for each frame. For example, the limits for a 590 A filter are based on 3 parallel cables, and for an 880 A filter on 4 parallel cables. The default motor cable operating capacitance is 0.75 nF/m. If another cable type is used, or the number of cables connected in parallel does not match the recommendations, the maximum motor cable length must be derated so that the maximum total motor cable capacitance is not exceeded.

Losses are higher in the low output frequency range (0–5 Hz). If drives are operating in this range, the maximum motor cable length (capacitance) must be derated 20%.

In an IT system, filter losses in a single-phase ground fault depend on the setup. All capacitances to ground should be minimized to minimize the fault current. The fault current increases the losses, and continuous operation during the ground fault cannot be guaranteed, especially if the filter is already in the limits without the fault. The filter has temperature protection against too high ground fault currents.

If drives are connected in parallel, the recommended common connection point for motor cables is at the motor terminals. See 6.6 Recommended Installation of Motor Cables.

Danfoss Drives Oy © 2026.09

7.3 LCL Filter and LC Filter

The LCL or LC Filter is used with the AFE module, and it ensures correct power quality and minimal interruption to the grid. Each AFE power unit has its own LCL or LC Filter. The LCL or LC Filter is designed for the nominal AFE switching frequency. It is safe to increase the switching frequency, but decreasing the switching frequency below the nominal value increases the risk of overheating and unwanted resonances. An increased switching frequency leads to derating of the AFE module. See 10.7.1 Derating the Output Current, 380–500 V AC and 10.7.2 Derating the Output Current, 525–690 V AC.

The available variants of the filter:

- For 380–500 V system modules: LCL10 (514 A), LCL11 (816 A), LCL11W (820 A), LC11W (820 A)
- For 525–690 V system modules: LCL10 (380 A), LCL11 (530 A)

Install the LCL Filter or LC Filter at the input of the active front-end. If the AFE has parallel power units, install a separate LCL Filter or LC Filter at the input of each power unit.

The LC Filter can be installed in a system where an input transformer is needed. The inductance of the primary windings of the transformer can be used as a grid-side inductor. The short-circuit impedance of the transformer must be >4%.

In a parallel connected system, each separate LC Filter must be connected in a dedicated transformer winding.

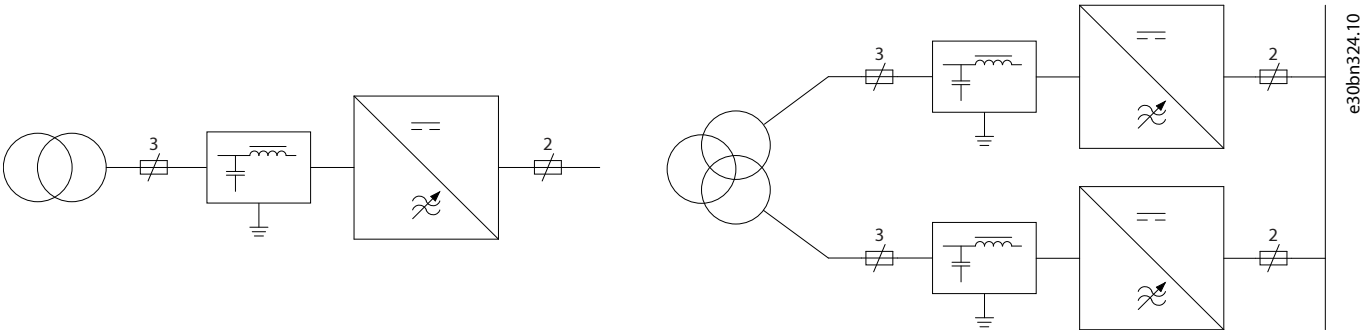

Figure 61: Installation of the LC Filter

NOTICE

Use aR-type AC fuses with the LCL Filter. Select the fuses according to the frame and the current rating of the system module. When designing the fuse installation, refer to the wiring diagrams of the AFE modules.

7.4 Selection of the LCL Filter

Table 16: Selection of the LCL Filter, Voltage Class 05

AFE model code[1]	Power unit frame	LCL filter	LCL frame
iC7-60SA3x05-317A	AM10/AR10	OF7Z3-M-AF-05-514A	LCL10
iC7-60SA3x05-400A		OF7Z3-M-AF-05-514A	
iC7-60SA3x05-514A		OF7Z3-M-AF-05-514A	
iC7-60SA3x05-580A	AM11/AR11	OF7Z3-M-AF-05-816A	LCL11
		OF7Z3-M-AF-05-820A	LCL11W
		OF7Z1-M-AF-05-820A	LC11W
iC7-60SA3x05-650A	AM11/AR11	OF7Z3-M-AF-05-816A	LCL11
		OF7Z3-M-AF-05-820A	LCL11W
		OF7Z1-M-AF-05-820A	LC11W

Table 16: Selection of the LCL Filter, Voltage Class 05 - (continued)

AFE model code[1]	Power unit frame	LCL filter	LCL frame
iC7-60SA3x05-730A	AM11/AR11	OF7Z3-M-AF-05-816A	LCL11
		OF7Z3-M-AF-05-820A	LCL11W
		OF7Z1-M-AF-05-820A	LC11W
iC7-60SA3x05-816A	AM11/AR11	OF7Z3-M-AF-05-816A	LCL11
		OF7Z3-M-AF-05-820A	LCL11W
		OF7Z1-M-AF-05-820A	LC11W
iC7-60SA3x05-920A	2 x AM10/2 x AR10	2 x OF7Z3-M-AF-05-514A	2 x LCL10
iC7-60SA3x05-1030		2 x OF7Z3-M-AF-05-514A	
iC7-60SA3x05-1210	2 x AM11/2 x AR11	2 x OF7Z3-M-AF-05-816A	2 x LCL11
		2 x OF7Z3-M-AF-05-820A	2 x LCL11W
iC7-60SA3x05-1410	2 x AM11/2 x AR11	2 x OF7Z3-M-AF-05-816A	2 x LCL11
		2 x OF7Z3-M-AF-05-820A	2 x LCL11W
iC7-60SA3x05-1630	2 x AM11/2 x AR11	2 x OF7Z3-M-AF-05-816A	2 x LCL11
		2 x OF7Z3-M-AF-05-820A	2 x LCL11W
iC7-60SA3x05-1860	3 x AM11/3 x AR11	3 x OF7Z3-M-AF-05-816A	3 x LCL11
		3 x OF7Z3-M-AF-05-820A	3 x LCL11W
iC7-60SA3x05-2120	3 x AM11/3 x AR11	3 x OF7Z3-M-AF-05-816A	3 x LCL11
		3 x OF7Z3-M-AF-05-820A	3 x LCL11W
iC7-60SA3x05-2450	3 x AM11/3 x AR11	3 x OF7Z3-M-AF-05-816A	3 x LCL11
		3 x OF7Z3-M-AF-05-820A	3 x LCL11W
iC7-60SA3x05-2800	4 x AM11/4 x AR11	4 x OF7Z3-M-AF-05-816A	4 x LCL11
		4 x OF7Z3-M-AF-05-820A	4 x LCL11W
iC7-60SA3x05-3270	4 x AM11/4 x AR11	4 x OF7Z3-M-AF-05-816A	4 x LCL11
		4 x OF7Z3-M-AF-05-820A	4 x LCL11W
iC7-60SA3x05-3650	5 x AM11/5 x AR11	5 x OF7Z3-M-AF-05-816A	5 x LCL11
		5 x OF7Z3-M-AF-05-820A	5 x LCL11W
iC7-60SA3x05-4080	5 x AM11/5 x AR11	5 x OF7Z3-M-AF-05-816A	5 x LCL11
		5 x OF7Z3-M-AF-05-820A	5 x LCL11W
iC7-60SA3x05-4500	6 x AM11/6 x AR11	6 x OF7Z3-M-AF-05-816A	6 x LCL11
		6 x OF7Z3-M-AF-05-820A	6 x LCL11W
iC7-60SA3x05-4900	6 x AM11/6 x AR11	6 x OF7Z3-M-AF-05-816A	6 x LCL11
		6 x OF7Z3-M-AF-05-820A	6 x LCL11W

1) 3x = 3A or 3H

Danfoss Drives Oy © 2026.09

Table 17: Selection of the LCL Filter, Voltage Class 07

AFE model code[1]	Power unit frame	LCL filter	LCL frame
iC7-60SA3x07-236A	AM10/AR10	OF7Z3-M-AF-07-380A	LCL10
iC7-60SA3x07-300A		OF7Z3-M-AF-07-380A	
iC7-60SA3x07-334A		OF7Z3-M-AF-07-380A	
iC7-60SA3x07-380A		OF7Z3-M-AF-07-380A	
iC7-60SA3x07-425A	AM11/AR11	OF7Z3-M-AF-07-530A	LCL11
iC7-60SA3x07-475A		OF7Z3-M-AF-07-530A	
iC7-60SA3x07-530A		OF7Z3-M-AF-07-530A	
iC7-60SA3x07-595A	2 x AM10/2 x AR10	2xOF7Z3-M-AF-07-380A	2 x LCL10
iC7-60SA3x07-670A		2xOF7Z3-M-AF-07-380A	
iC7-60SA3x07-760A		2xOF7Z3-M-AF-07-380A	
iC7-60SA3x07-850A	2 x AM11/2 x AR11	2xOF7Z3-M-AF-07-530A	2 x LCL11
iC7-60SA3x07-945A		2xOF7Z3-M-AF-07-530A	
iC7-60SA3x07-1060		2xOF7Z3-M-AF-07-530A	
iC7-60SA3x07-1190	3 x AM11/3 x AR11	3xOF7Z3-M-AF-07-530A	3 x LCL11
iC7-60SA3x07-1325		3xOF7Z3-M-AF-07-530A	
iC7-60SA3x07-1590		3xOF7Z3-M-AF-07-530A	
iC7-60SA3x07-1780	4 x AM11/4 x AR11	4xOF7Z3-M-AF-07-530A	4 x LCL11
iC7-60SA3x07-2120		4xOF7Z3-M-AF-07-530A	
iC7-60SA3x07-2380	5 x AM11/5 x AR11	5xOF7Z3-M-AF-07-530A	5 x LCL11
iC7-60SA3x07-2650		5xOF7Z3-M-AF-07-530A	
iC7-60SA3x07-2970	6 x AM11/6 x AR11	6xOF7Z3-M-AF-07-530A	6 x LCL11
iC7-60SA3x07-3180		6xOF7Z3-M-AF-07-530A	
iC7-60SA3x07-3350	7 x AM11/7 x AR11	7xOF7Z3-M-AF-07-530A	7 x LCL11
iC7-60SA3x07-3710		7xOF7Z3-M-AF-07-530A	
iC7-60SA3x07-4000	8 x AM11/8 x AR11	8xOF7Z3-M-AF-07-530A	8 x LCL11
iC7-60SA3x07-4240		8xOF7Z3-M-AF-07-530A	

1) 3x = 3A or 3H

7.5 The Pre-charging Unit

The pre-charging unit is used for the pre-charging of the system modules that are connected to the same DC bus. There are 3 electrical sizes and an IEC and a UL variant of these. The pre-charging unit is available as an accessory.

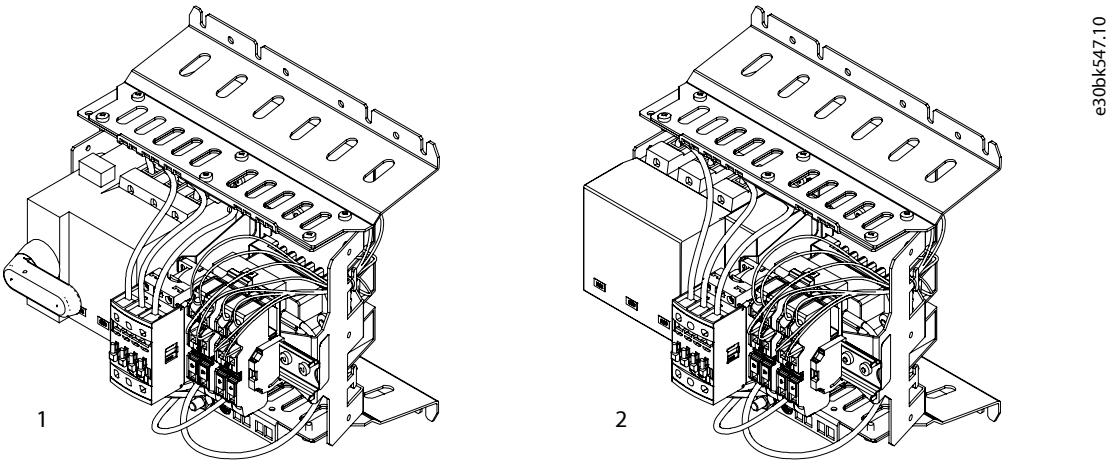

Figure 62: Pre-charging Units

1	Pre-charging unit, IEC	2	Pre-charging unit, UL

Table 18: Selection of the Correct Pre-charging Unit, Voltage Class 05

System modules	Pre-charging unit
AM10 + IM10/AR10 + IR10	Pre-charging unit 10 (IEC or UL)
AM11 + IM11/AR11 + IR11	
2 x AM10 + 2 x IM10/2 x AR10 + 2 x IR10	
2 x AM11 + 2 x IM11/2 x AR11 + 2 x IR11	Pre-charging unit 20 (IEC or UL)
3 x AM11 + 3 x IM11/3 x AR11 + 3 x IR11	
4 x AM11 + 4 x IM11/4 x AR11 + 4 x IR11	
5 x AM11 + 5 x IM11/5 x AR11 + 5 x IR11	Pre-charging unit 30 (IEC or UL)
6 x AM11 + 6 x IM11/6 x AR11 + 6 x IR11	

Table 19: Selection of the Correct Pre-charging Unit, Voltage Class 07

System modules	Pre-charging unit
AM10 + IM10/AR10 + IR10	Pre-charging unit 10 (IEC or UL)
AM11 + IM11/AR11 + IR11	
2 x AM10 + 2 x IM10/2 x AR10 + 2 x IR10	
2 x AM11 + 2 x IM11/2 x AR11 + 2 x IR11	Pre-charging unit 20 (IEC or UL)
3 x AM11 + 3 x IM11/3 x AR11 + 3 x IR11	
4 x AM11 + 4 x IM11/4 x AR11 + 4 x IR11	
5 x AM11 + 5 x IM11/5 x AR11 + 5 x IR11	Pre-charging unit 30 (IEC or UL)
6 x AM11 + 6 x IM11/6 x AR11 + 6 x IR11	
7 x AM11 + 7 x IM11/7 x AR11 + 7 x IR11	2x pre-charging unit 20 (IEC or UL)
8 x AM11 + 8 x IM11/8 x AR11 + 8 x IR11	

Danfoss Drives Oy © 2026.09

NOTE: Select the suitable pre-charging unit according to Table 20 and the total capacitance of the drive system. If the total capacitance is higher than stated in the table, contact Danfoss.

Table 20: Maximum Capacitance of the Pre-charging Unit

Pre-charging unit	Network [V AC]	Capacitance [µF]
Pre-charging unit 10 (IEC or UL)	400/500	66500
	690	29500
Pre-charging unit 20 (IEC or UL)	400/500	184000
	690	76500
Pre-charging unit 30 (IEC or UL)	400/500	275000
	690	114500
2 x pre-charging unit 20 (IEC or UL)	400/500	368000
	690	153000

There are thermal restrictions in a repeated use of the pre-charging unit. See the allowed pre-charging cycle in a 60 °C (140 °F) ambient temperature in Table 21.

Table 21: The Thermally Allowed Pre-charging Cycle

Step	Task	Duration
1.	Charging	10 s
2.	Discharging	50 s
3.	Charging	10 s
4.	Discharging	50 s
5.	Wait for the pre-charging unit to cool down.	10 minutes
6.	Repeat	–

8 Control Unit

8.1 Modular Control Unit

The maximum input power of the internal 24 V DC power supply is 60 W.

NOTICE

EXTERNAL 24 V DC POWER SUPPLY OPTIONAL

- The power units of the air-cooled system modules provide a 24 V DC power supply for the control unit. But it is also possible to provide an external 24 V DC +15%/-10% power supply for the control unit.

NOTICE

CABLE INSULATION

- Insulation between 2 circuits must be designed according to the circuit that has the highest voltage.

NOTICE

SEPARATE 24 V WIRES FROM 115/240 V CABLES

The 24 V wires must be separated from the 115 V/240 V cables. If they are not separated, all wirings must be made with shielded 115 V/240 V cables.

NOTICE

SIGNAL CABLES

- It is recommended to use shielded/twisted pair signal cables.

Table 22: Maximum Power Consumption of the Control Unit Components

Component	Power consumption [W]
Control unit, including control panel	6
Star coupler board	4
I/O and Relay Option, 250 mA at 24 V_{out}	8
Any other option board, 1 pcs	4

The system modules are controlled with the modular control unit. The control and I/O board circuits are DVC As circuits. The control unit and the system modules are connected via fiber optics. When 2 or more parallel system modules are used, a star coupler board is needed. The modular control unit provides an interface towards the customer's upper control system. The control unit includes 2 Ethernet ports for a fieldbus connection. Daisy chaining the fieldbus is supported for typical protocols, such as Modbus TCP and PROFINET RT. Additional functional extensions can be added to incorporate analog and digital inputs and outputs as well as other functionality such as temperature measurement or voltage measurement. A control panel is available for local control.

The modular control unit can be mounted nearby to or remotely from the power unit. The control unit consists of various boards installed on a mounting plate. The boards are connected to each other with option connectors. Several boards and mounting plates can be installed in parallel.

There are 3 different mechanical board types in the modular control unit:

- Control board
- Star coupler board

Danfoss Drives Oy © 2026.09

- Functional extensions, for example:
  - I/O and Relay Option OC7C1
  - Encoder/Resolver Option OC7M0
  - Temperature measurement option
  - Voltage measurement option

See more information on the option boards in the relevant installation guides and operating guides.

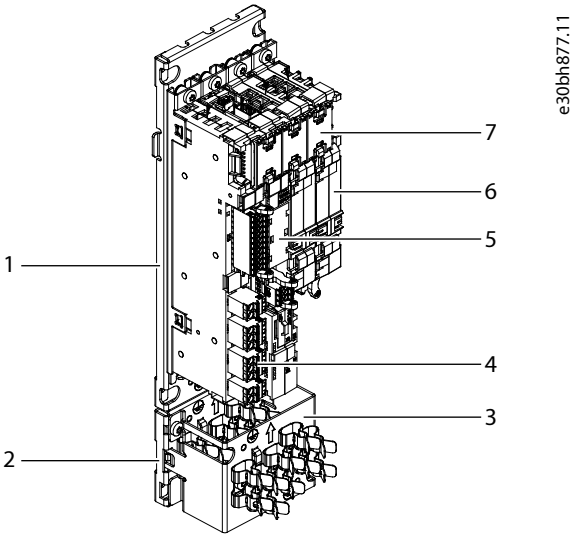

Figure 63: Example of the Modular Control Unit

1	Mounting plate	2	Base grounding plate
3	Grounding plate extension	4	I/O and Relay Option
5	Control board	6	Option board
7	Option connector		

8.2 Control Board

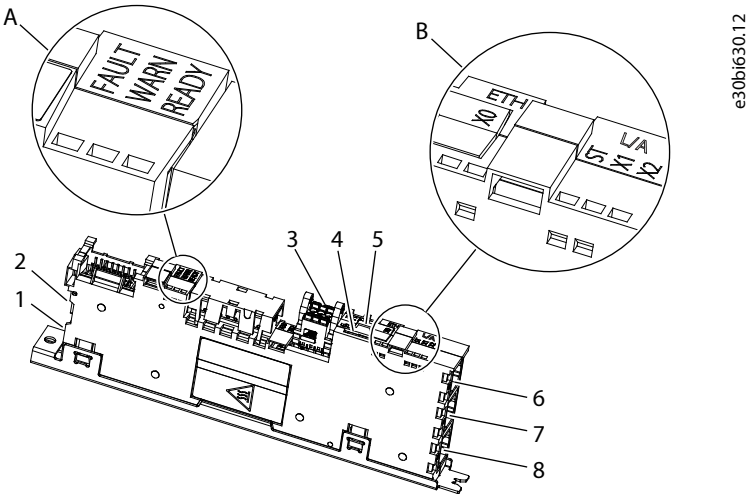

Figure 64: The Control Board

A	Status indicators (FAULT, WARN, READY)	B	Fieldbus indicators (ST, X1, X2) and Ethernet port indicators (X0)
1	Control panel connector (X9)	2	Fiber optic link to power unit (X80)
3	24 V DC supply (X62)	4	microSD card
5	RTC battery holder	6	Ethernet port (X0)
7	Ethernet port (X1)	8	Ethernet port (X2)

8.3 Definitions of the Indicator Lights on the Control Board

Table 23: Definitions of the Indicator Lights on the Control Board

Indicator name	Function (color)	Description
Fault	On (red)	Fault active
Warn	On (yellow)	Warning active
Ready	On (white)	Ready for operation
	Blinking 1 Hz (white)	Power on, not ready
Fault+Warn+Ready	Blinking (red + yellow + white)	Winking from an external application. Can be used for identifying where the external application is wirelessly connected to.
X0 link activity	Off	No link
	On (green)	Link OK, no data
	Blinking (green)	Link OK, data communication
X0 link speed	Off	No link or 10 Mbps link
	On (orange)	100 Mbps link

For the description of the fieldbus indicators (ST, X1, X2), see the relevant application guide.

8.4 Control Board Connections

Table 24: Control Board Connections

Terminal	Function	Connector type
X1	Ethernet port (used for fieldbus)	RJ45
X2	Ethernet port (used for fieldbus)	RJ45
X0	Ethernet port (used for the PC tool)	RJ45
Micro SD	microSD card	Micro SD
X62	24 V DC supply	2 x 3 spring force connector 0.2–1.5 mm^2
X33 for inverter module	STO terminal	1 x 10 spring force connector 0.2–1.5 mm^2
Option bus	Option bus (internal connection)	Custom
X80	Fiber optic link to power unit or star coupler board	LC-duplex
X9	Control panel terminal	iX Industrial
RTC battery	RTC battery	Battery type: • Panasonic BR1632A (3 V +125 °C) • Jauch Quartz CR1632 (246335) (3 V, +85 °C) • Renata Batteries CR1632 (3 V, +85 °C)

Danfoss Drives Oy © 2026.09

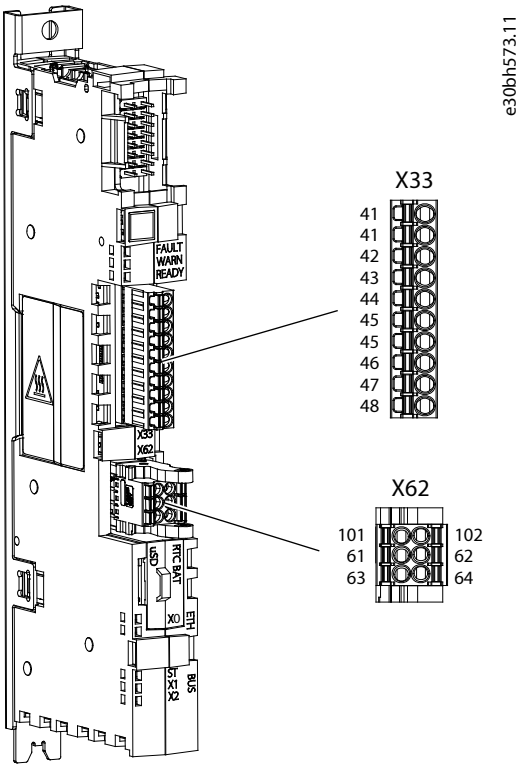

Figure 65: Control Board Terminal Block and Terminal Numbering

Table 25: STO Terminal Signals (X33) for the Inverter Module

Terminal	Function	Description
41A[1]	24 V	+ 24 V DC Output
41B[1]	24 V	+ 24 V DC Output
42	S.INA+	+ Safe Input Channel A
43	S.INB+	+ Safe Input Channel B
44	S.FB+	+ STO Feedback
45A[1]	GND	0 V/GND
45B[1]	GND	0 V/GND
46	S.INA-	- Safe Input Channel A
47	S.INB-	- Safe Input Channel B
48	S.FB-	- STO Feedback

1) Terminals 41A, 41B, 45A, and 45B have double pins to make connections easier.

Table 26: 24 V DC Supply Signals (X62)

Terminal	Function	Description
101	+24 V input	Internal +24 V DC, 60 W control supply
102	GND	Power supply ground
61	+24 V external input	External +24 V DC control supply, maximum 10 A. Must be fuse-protected. Possible to daisy chain for multiple controllers.
62	GND	Power supply ground

Table 26: 24 V DC Supply Signals (X62) - (continued)

Terminal	Function	Description
63	+24 V output	+24 V DC output for daisy chain, only available when the +24 V DC external input control supply is used.
64	GND	Power supply ground

For the circuit diagrams of the control unit, see 10.3.13 Wiring Diagrams of the +24 V Supply for the Control Unit.

8.5 Star Coupler Board

System modules for high current ratings consist of multiple power units that are connected via a star coupler board to 1 control unit.

With the star coupler board, it is possible to connect up to 8 power units depending on voltage range and product type.

It is recommended to use an external 24 V power supply connected to the top of the star coupler board. The 24 V supply from the control board is supervised, so it is cut if consumption is exceeded due to external short circuits. The fiber connection is always needed between the control board and star coupler board.

The star coupler board can be installed next to the control unit. The star coupler board can also be installed near the power units to make the cabling from the star coupler board to the power units easier. See Figure 69.

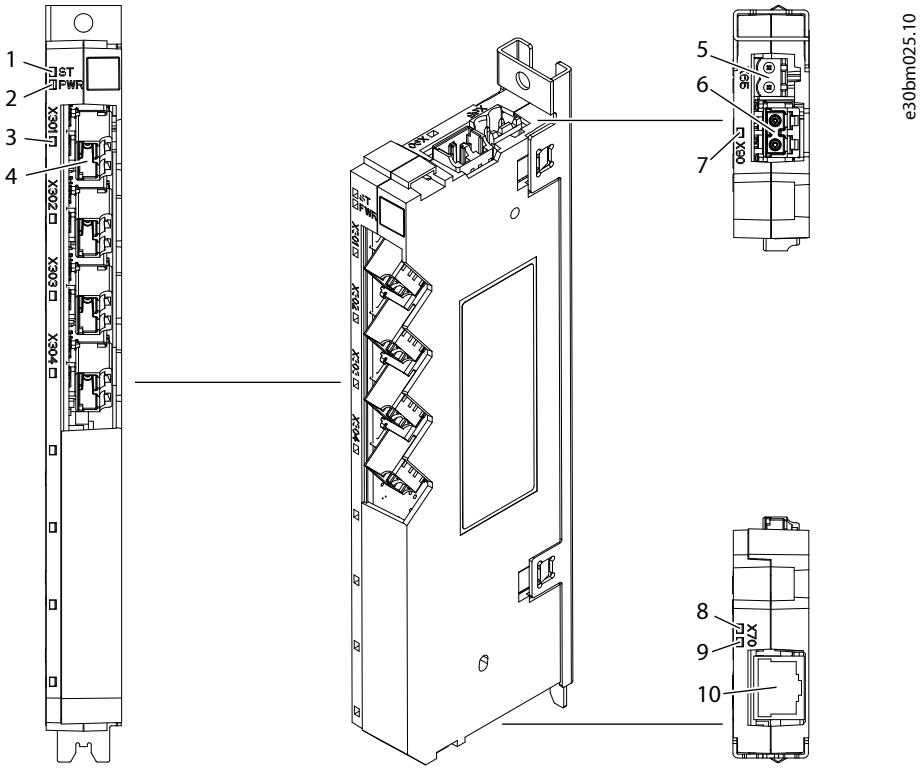

Figure 66: Terminal and Indicator Light Locations on the 4-port Star Coupler Board

Danfoss Drives Oy © 2026.09

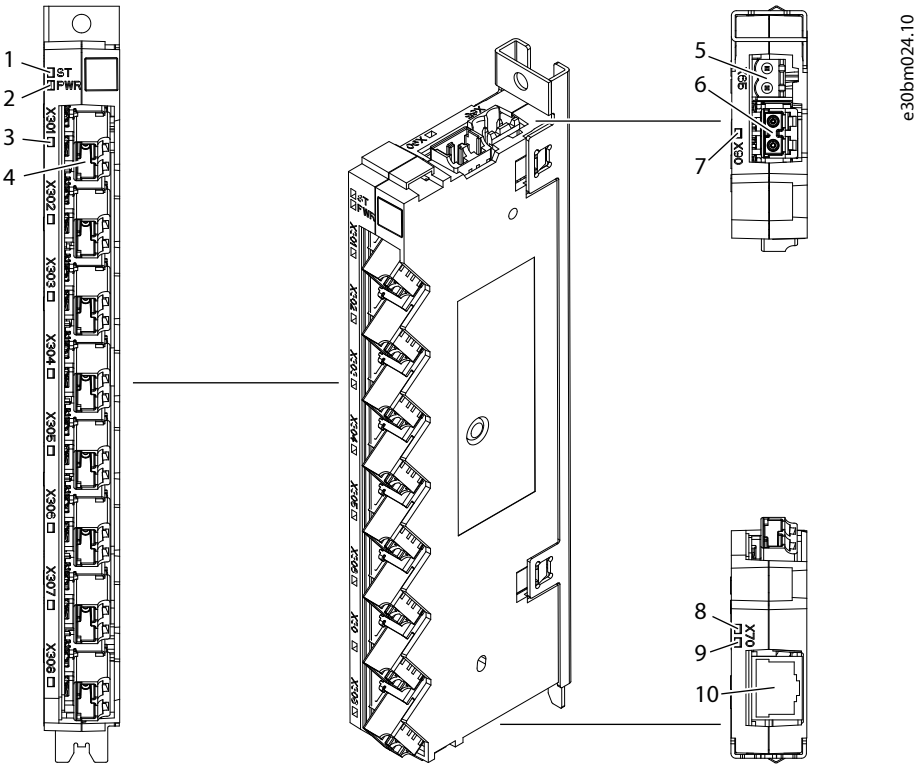

Figure 67: Terminal and Indicator Light Locations on the 8-port Star Coupler Board

1	Board configuration status indicator	2	+24 V power status indicator
3	Power unit connection status indicators	4	Fiber connection to the power unit (X301–X316)
5	+24 V power supply (X65)	6	Fiber connection to the control board (X90)
7	Control link status indicator	8	Ethernet speed indicator
9	Ethernet link activity indicator	10	Ethernet port (X7)

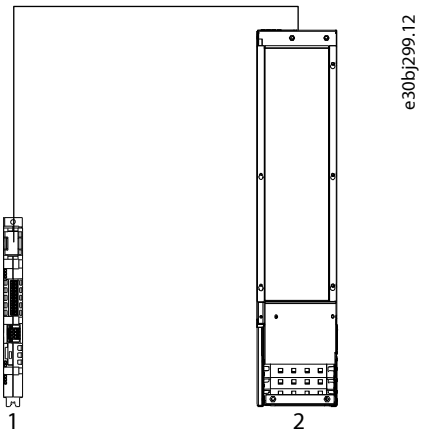

Figure 68: Control Connection

1	Control board	2	Power unit

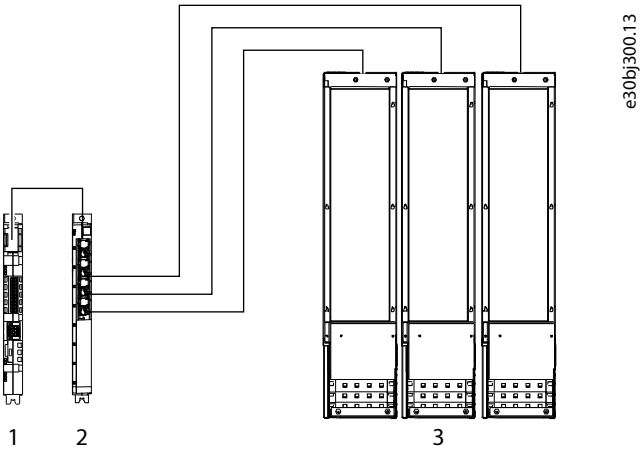

Figure 69: Example Control Connection with a Star Coupler Board: 3 Power Units in Parallel

1	Control board	2	Star coupler board
3	3 power units		

8.6 Definitions of the Indicator Lights on the Star Coupler Board

Table 27: Definitions of the Indicator Lights on the Star Coupler Board

Indicator name	Function (color)	Description
Configuration status	Off	During booting, until the software configuration is executed.
	Blinking 10 Hz (green)	Software updating.
	On (green)	Board configuration succeeded and all port communication works as intended.
	On (red)	Board configuration failed or any port communication failed on startup or during run.
24 V power status	On (white)	Star coupler board is powered.[1]
Power unit link status (X301–X316)	Off	No link established.
	On (green)	Link established.
Control link status	Off	No link established.
	On (green)	Link established.
Ethernet speed	Off	No link or 10 Mbps link
	On (orange)	100 Mbps link
Ethernet link activity	Off	No link
	On (green)	Link OK, no data
	Blinking (green)	Link OK, data communication

1) If there is no software on the star coupler board or the software cannot be executed, the indicator light does not turn on.

Danfoss Drives Oy © 2026.09

8.7 Star Coupler Board Connections

Table 28: Star Coupler Board Connections

Terminal	Function	Connector type
X7	Ethernet port	RJ45
X65	24 V DC supply	2 x spring force connector 2.5 mm^2
X90	Fiber optic link to control board	LC-duplex
X301–X316	Fiber optic link to power unit	LC-duplex

Table 29: 24 V DC Supply Signals (X65)

Terminal	Function	Description
61	+24 V external input	External +24 V DC star coupler supply, maximum 10 A. Must be fuse-protected.
62	GND	Power supply ground

8.8 I/O and Relay Option (OC7C1) Connections

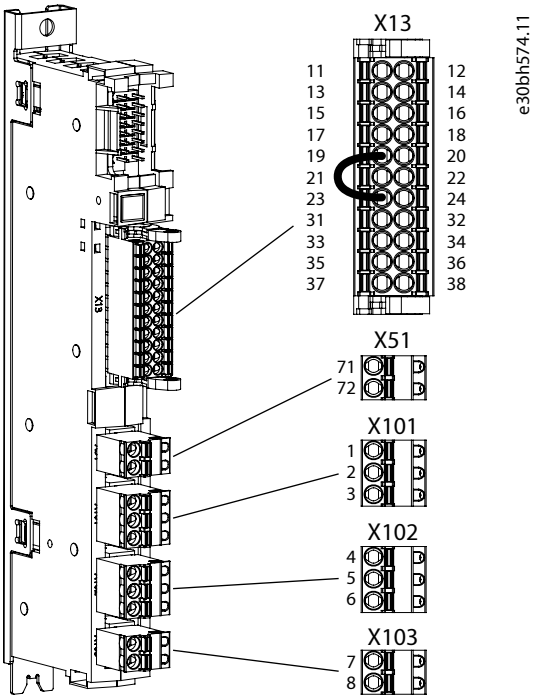

Figure 70: I/O and Relay Option Terminal Block and Terminal Numbering

Table 30: I/O and Relay Option (OC7C1) Signals

Terminal	Function	Connector type
X13	I/O terminal	2 x 11 spring-force connector 0.2–1.5 mm^2
X51	Thermistor input	1 x 2 spring-force connector 0.25–2.5 mm^2
X101	Relay 1	1 x 3 spring-force connector 0.25–2.5 mm^2
X102	Relay 2	1 x 3 spring-force connector 0.25–2.5 mm^2
X103	Relay 3	1 x 2 spring-force connector 0.25–2.5 mm^2

Table 31: I/O Terminal Signals (X13)

Terminal	Function	Description
11	+24 V_{out}	Control voltage output. 24 V DC (-15...+20%) Maximum current 200 mA Short-circuit protected
12	+24 V_{out}	
13	DI 1	Configurable digital input, galvanically isolated. 24 V DC, 0 < 5 V, 1 > 15 V. Input load 7.5 mA constant current + 10 kΩ resistive load, maximum pulse frequency 100 kHz.
14	DI 2	
15	DI 3	
16	DI 4	
17	DI 5	
18	DI 6	
19	DGND	Digital input ground, not isolated by default. When using the internal +24 V_{out} supply, connect the external jump wire between DGND and GND. When using the external +24 V DC supply, remove the external jump wire between DGND and GND.
20	DGND	
21	DO 1	Configurable digital output.[1] Push-pull 24 V/50 mA Open collector (NPN/PNP) 48 V/50 mA Short-circuit protected
22	DO 2	
23	GND	I/O ground. Ground for digital outputs, +10 V Ref, +24 V_{out}, analog inputs, and analog outputs.
24	GND	
31	AO 1	Configurable analog output. Voltage mode: • 0...10 V • R_L ≥ 1 kΩ • Accuracy ≤ ± 0.5% of full scale • Short-circuit protected Current mode: • 0...20 mA • R_L ≤ 600 Ω • Accuracy ≤ ± 0.5% of full scale • Short-circuit protected
32	+10 V ref.	10 V (0...+3%), maximum current 10 mA

Danfoss Drives Oy © 2026.09

Table 31: I/O Terminal Signals (X13) - (continued)

Terminal	Function	Description
33	AI 1	Configurable analog input. Voltage mode: • 0 ± 10 V • Single-ended • R_i ~ 10 kΩ • Accuracy ± 0.5% of full scale Current mode: • 0 ± 20 mA • Differential • R_i ~ 200 Ω • Accuracy ± 0.5% of full scale
34	AI 2	
35	GND	I/O ground. Ground for digital outputs, +10 V Ref, +24 V_{out}, analog inputs, and analog outputs.
36	GND	
37	GND	
38	GND	

1) Digital outputs are not recommended for main circuit breaker control, use relay outputs instead.

Table 32: Thermistor Input Signals (X51)

Terminal	Function	Description
71	TI+	Thermistor input, galvanically isolated. R_{trip} = 4 kΩ
72	TI-	

Table 33: Relay 1 Signals (X101)

Terminal	Function	Description
1	COM	Configurable relay output. Switching capacity: • 24 V DC/8 A • 250 V AC/8 A • 125 V DC/0.4 A Minimum switching load: 5 V/10 mA
2	NO	
3	NC	

Table 34: Relay 2 Signals (X102)

Terminal	Function	Description
4	COM	Configurable relay output. Switching capacity: • 24 V DC/8 A • 250 V AC/8 A • 125 V DC/0.4 A Minimum switching load: 5 V/10 mA
5	NO	
6	NC	

Table 35: Relay 3 Signals (X103)

Terminal	Function	Description
7	COM	Configurable relay output. Switching capacity: • 24 V DC/8 A • 250 V AC/8 A • 125 V DC/0.4 A Minimum switching load: 5 V/10 mA
8	NO	

8.9 I/O and Relay Option Interface

8.9.1 Analog Inputs

The I/O and Relay Option has 2 analog inputs that can be configured with the software to voltage input or current input. Table 36 shows the specification for the analog inputs.

The analog inputs are protected in overvoltage conditions.

Table 36: Analog Input Types, Values, and Tolerances

Parameter	Value
Measuring range: voltage mode	-10...+10 V
Measuring range: current mode	-20...+20 mA
Input impedance	Voltage mode ≈ 10 kΩ
	Current mode ≈ 200 Ω
Accuracy	0.5% of full scale
Reaction time	0...90% step: < 1 ms
Number of inputs	2
Overvoltage limit	+15/-15 V
Overcurrent limit	+32/-32 mA
Electrical fast transient (EFT)	2 kV

8.9.2 Analog Outputs

The I/O and Relay Option has 1 analog output that can be configured with the software to voltage output or current output. Table 37 shows the specification for the analog output.

The analog output is protected in overvoltage conditions.

Table 37: Analog Output Types and Values

Parameter	Value
Output voltage range	0...10 V
Output current range	0...20 mA
Accuracy	0.5% of full scale
Reaction time	0...90% step: <1 ms
Electrical fast transient (EFT)	2 kV

Danfoss Drives Oy © 2026.09

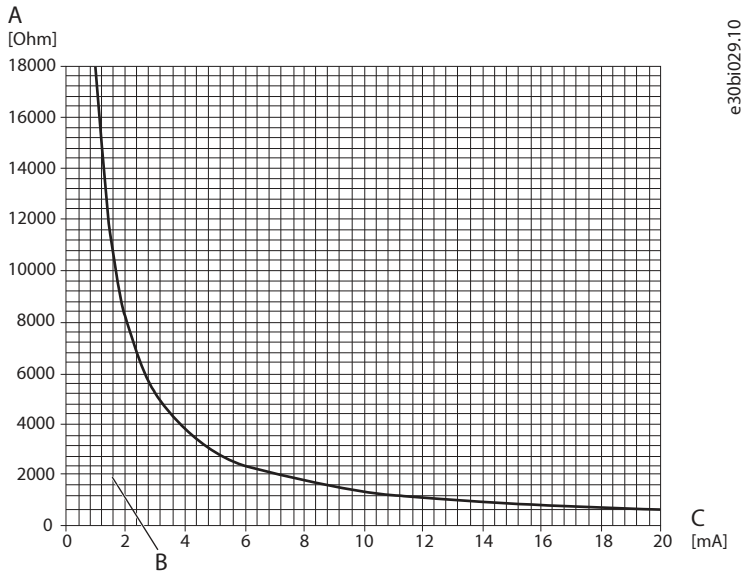

Figure 71: Allowed Load Resistance of Analog Output in Current Mode

A	Load resistance	B	Allowed load resistance
C	Output current		

8.9.3 Digital Inputs

The I/O and Relay Option has 6 digital inputs. By default, the digital inputs are not isolated, because there is an external wire between the connector pins 19 (D_{GND}) and 23 (GND). The digital inputs can be functionally isolated from the PCB ground of the I/O and Relay Option by removing the wire. The digital inputs are polarity free.

Digital inputs are overvoltage protected.

Table 38: Digital Inputs Logic Levels and Other Requirements

Parameter	Value
Recommended operation voltage	0...24 V +20%/-10%
Overvoltage limit	33 V
Logic level	0 = $V_{TL} \leq 5$ V 1 = $V_{TH} \geq 15$ V
Input load	7.5 mA constant current and 10 kΩ resistive load
Reaction time	< 5 µs
Maximum frequency	100 kHz
Electrical fast transient (EFT)	2 kV

8.9.4 Digital Outputs

The I/O and Relay Option has 2 digital outputs. The digital outputs are the push-pull type. The digital outputs can also be used as the open collector type.

The digital outputs are short-circuit protected.

Table 39: Digital Output Voltage and Current

Parameter	Value
Output voltage	0 = max 2 V 1 = min 20 V
Rated current	±50 mA
Overcurrent limit	±80 mA
Maximum voltage when used as open collector output	48 V
Maximum frequency	100 kHz
Electrical fast transient (EFT)	2 kV

1) Control unit power supply 24 V +20%/-10% and I_{load} max 50 mA

8.9.5 Relay Outputs

The I/O and Relay Option has 3 relay outputs. Relay 1 and Relay 2 have NO and NC contacts [1 form C (CO)]. Relay 3 has only an NO contact [1 form A (NO)]. The relay output interface is reinforced for system voltages ≤ 300 V. The lifetime for relays is 100.000 cycles.

Table 40: Relay Output Values

Parameter	Value
Rated voltage	250 V AC
Maximum switching voltage	400 V AC
Rated current	8 A
Breaking capacity maximum	2000 VA
Operate time maximum	9 ms
Release time maximum	5 ms
DC breaking capacity	See Figure 72.

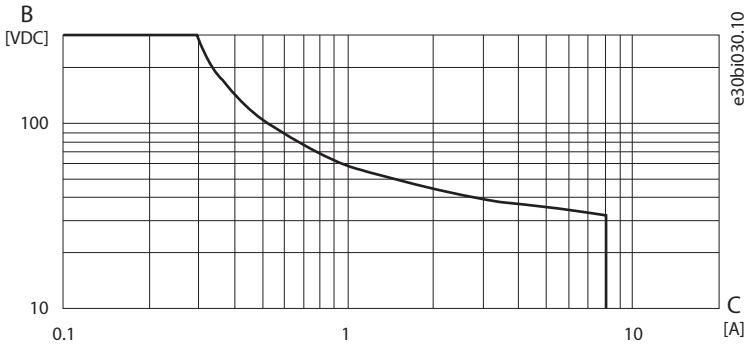

Figure 72: Maximum DC Load Breaking Capacity

B	DC voltage	C	DC current

8.9.6 Analog Reference Voltage Output

The I/O and Relay Option contains 1 analog reference voltage output.

Danfoss Drives Oy © 2026.09

Table 41: Analog Reference Voltage Output Values

Parameter	Value
Nominal voltage	10 V
Accuracy	-3...+3% of nominal voltage
Maximum output current	10 mA
Short-circuit current	13 mA
Electrical fast transient (EFT)	2 kV

8.9.7 24 V DC Voltage Output

The I/O and Relay Option contains 1 voltage output of 24 V DC.

Table 42: 24 V DC Voltage Output

Parameter	Value
Nominal voltage	24 V
Accuracy	-15...+20%
Maximum output current	200 mA
Short-circuit current	250 mA
Electrical fast transient (EFT)	2 kV

8.9.8 Thermistor Input

The I/O and Relay Option contains 1 thermistor input. Thermistor input has basic isolation for system voltages ≤ 600 V and reinforced isolation for system voltages ≤ 300 V (OVC III 3000 m). For system voltage of 600 V, supplementary insulation is necessary at the motor end.

Table 43: Thermistor Input

Parameter	Value
Electrical fast transient (EFT)	2 kV
Sensor	R_{trip} 4.0 kΩ (PTC)

8.10 Assembling the Control Unit Mounting Plates

Use these instructions to assemble the mounting plate of the modular control unit. All the parts can be found in the accessories bag.

1. Assemble the mounting plate as shown in the illustration.
   a. Attach the base grounding plate into the mounting plate.
   b. Align the cable clamps in the holes in a wave-like form and attach with screws.
   c. Attach the grounding plate extension onto the base grounding plate with 2 screws.
   d. Attach the cable clamps with screws.

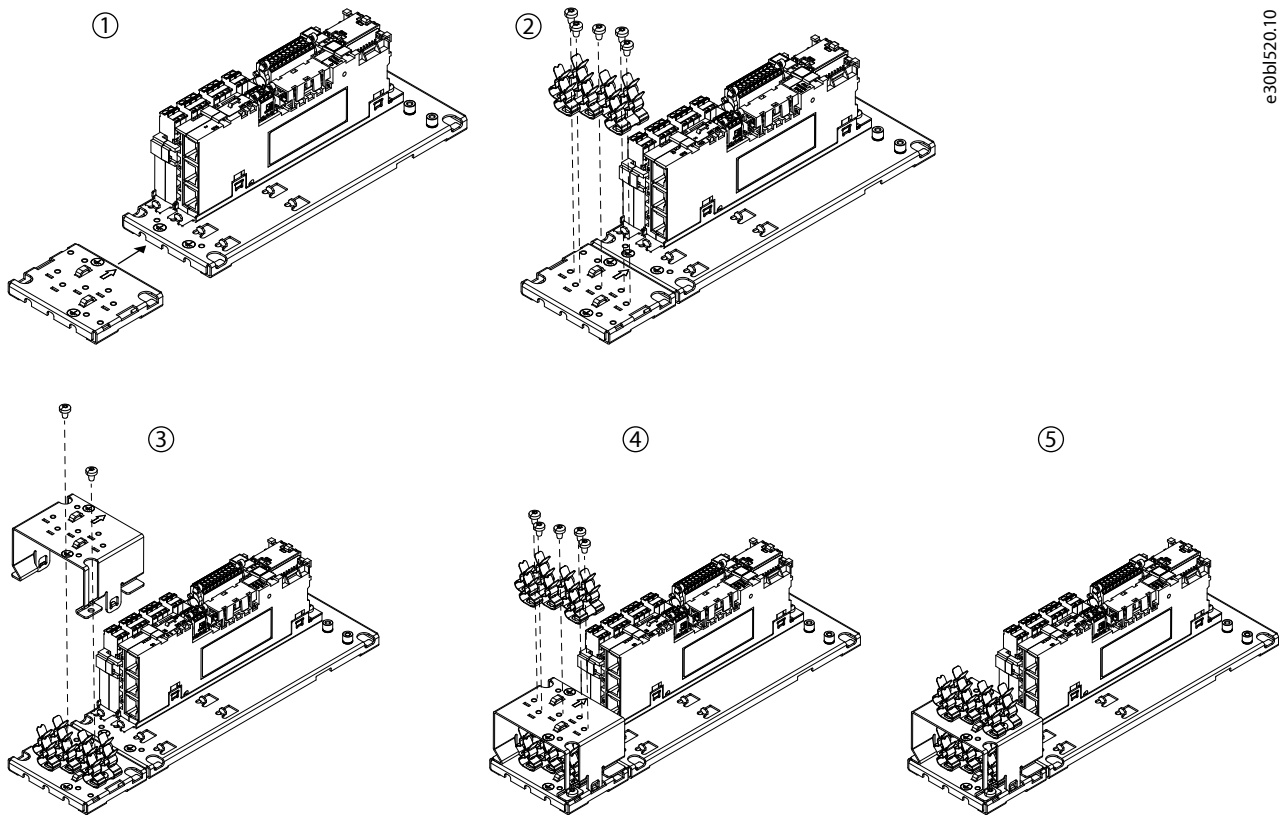

Figure 73: Assembling the Mounting Plate

8.11 Attaching the Control Unit Mounting Plates

Use these instructions to attach 2 or several mounting plates to each other, and to install mounting plates to the cabinet. All the parts can be found in the accessories bag.

1. Install the mounting plates to each other by fitting the sides together.

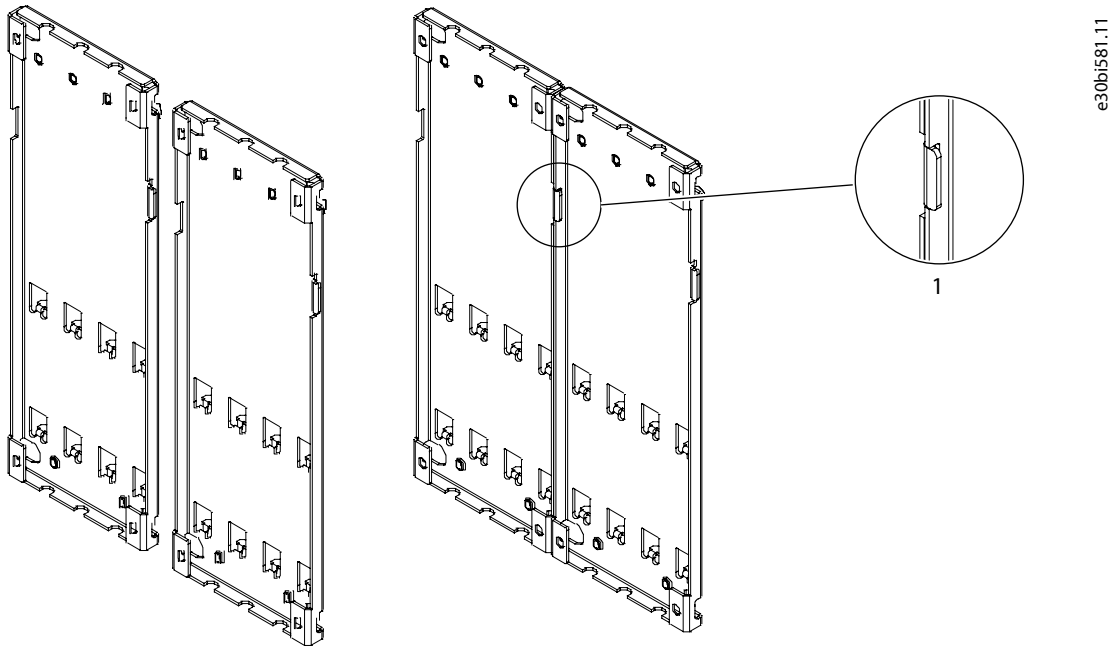

Figure 74: Attaching Mounting Plates to Each Other

1	Lip

Danfoss Drives Oy © 2026.09

2. Attach the mounting plates onto the cabinet with screws by the 4 mounting holes in the corners of the mounting plates.

   The screws are not included in the delivery. Use an M4/M5 screw.

8.12 Installing the Control Unit

Install the control unit to the selected location. Use the 4 mounting holes in the corners of the mounting plate.

8.13 Installing Boards to the Modular Control Unit

⚠ CAUTION

DAMAGE TO OPTION BOARDS

Do not install, remove, or replace option boards on the drive or converter when the power is on. Doing this can damage the boards.

- Switch off the drive or converter before installing, removing, or replacing option boards.

IMPORTANT: It is recommended to install Option Extender OC7F2 in the 2nd slot on the right of the control unit.

1. Remove the screw that is pre-attached to the fixing point at the top of the mounting plate and keep it.
2. Slide the lower edge of the board to the mounting plate fixing point.

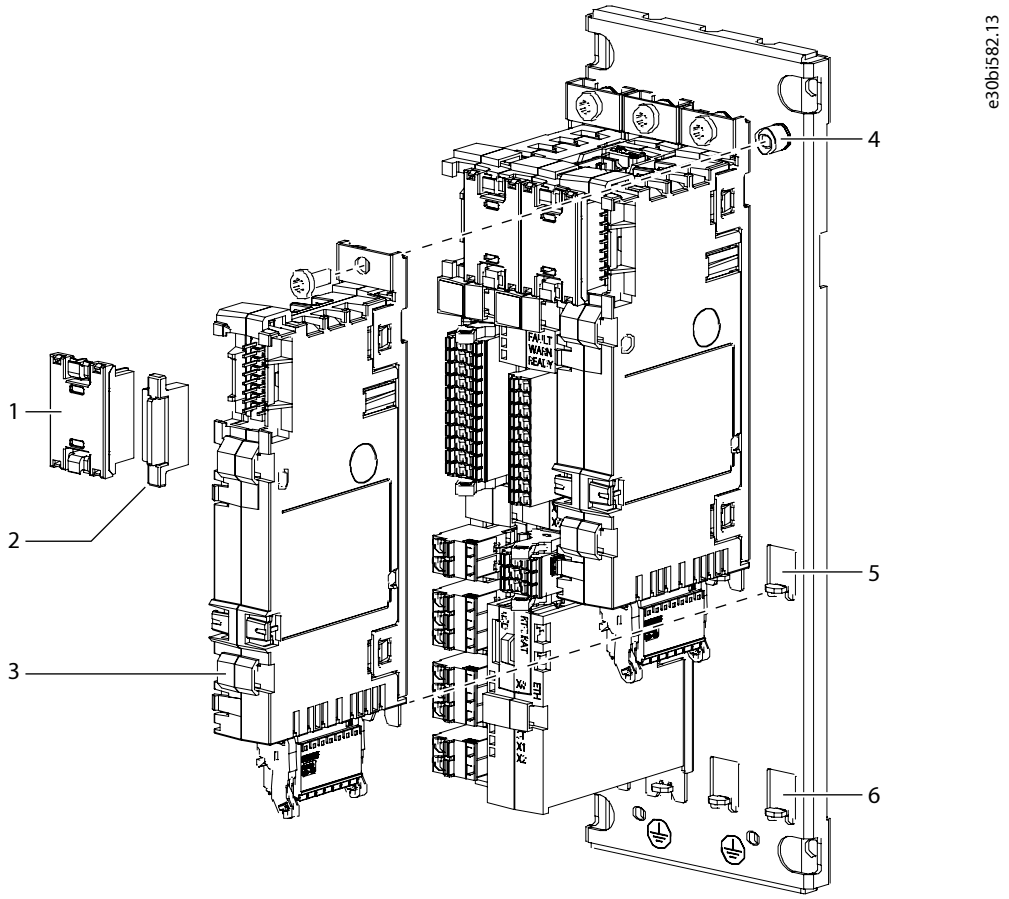

Figure 75: Installing a Board to the Modular Control Unit Mounting Plate

1	Option connector	2	Option terminal cover
3	Option board	4	Fixing point at the top
5	Fixing point at the middle	6	Fixing point at the bottom

3. Use the screw to attach the board to the fixing point at the top.
4. Attach an option connector to the installed board and the board next to it.
5. Attach option terminal covers to the empty terminals.

8.14 Connecting the Fieldbus Cable and the Fiber Cables

1. Connect the PLC to the Ethernet port X1 or X2 in the control board with a fieldbus cable.
2. Connect the terminal X80 in the control board to the terminal X90 in the star coupler board with a fiber cable.
3. Connect the terminals X301–X316 in the star coupler board to the power units with fiber cables.

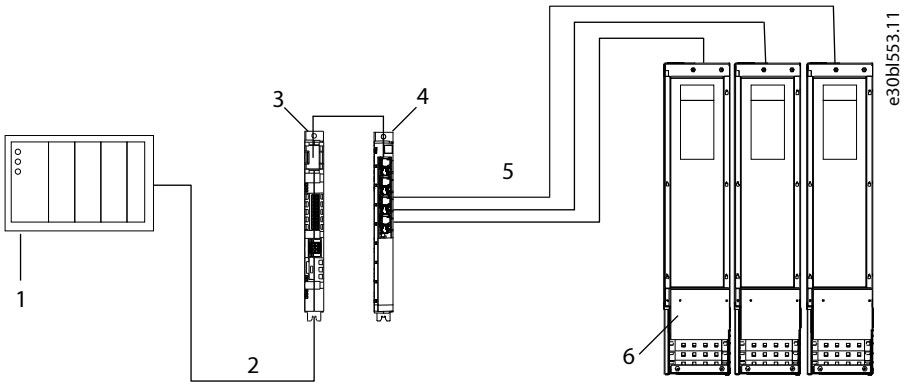

Figure 76: Connecting the Fieldbus Cable and the Fiber Cables

1	PLC (not included in the delivery)	2	Fieldbus cable
3	Control board	4	Star coupler board
5	Fiber cables	6	Power units

8.15 Installing the Control Cables into the Control Terminals

1. Install the control cables into the control terminals.

See the pin numbering of the I/O and Relay Option in 8.8 I/O and Relay Option (OC7C1) Connections.

Danfoss Drives Oy © 2026.09

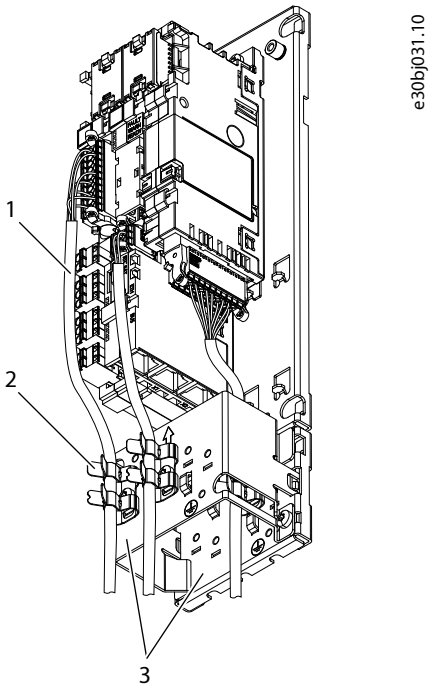

Figure 77: Example of Installing the Control Cables

1	Control cable	2	Cable clamp
3	Grounding plates		

2. Strip the control cables. Attach the control cables to the cable clamps on the suitable grounding plate.

   The lower part of the cable clamp fixes the cable to the plate and provides strain relief. The upper part provides ~360° grounding for the cable shield.

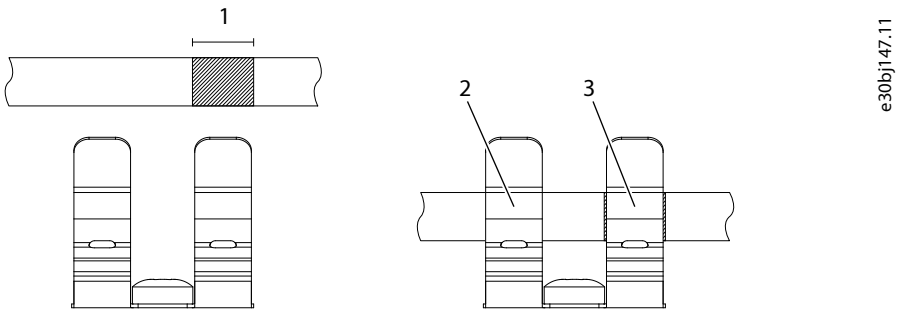

Figure 78: Stripping the Cable and Using the Grounding Plates

1	Stripping length, 10 mm (0.4 in)	2	Strain relief
3	Grounding		

8.16 Control Panel Mounting Kits and Cables

Control panels can also be mounted apart from the drives, for example, on a wall or panel, allowing remote control and monitoring of the drives. The protection rating of the mounting kits is IP55/UL Type 21.

The control panel requires a dedicated cable. The maximum supported length of the control panel cable is 10 m (33 ft).

There are 2 types of mounting kits:

- Flush mounting kit

- Surface mounting kit

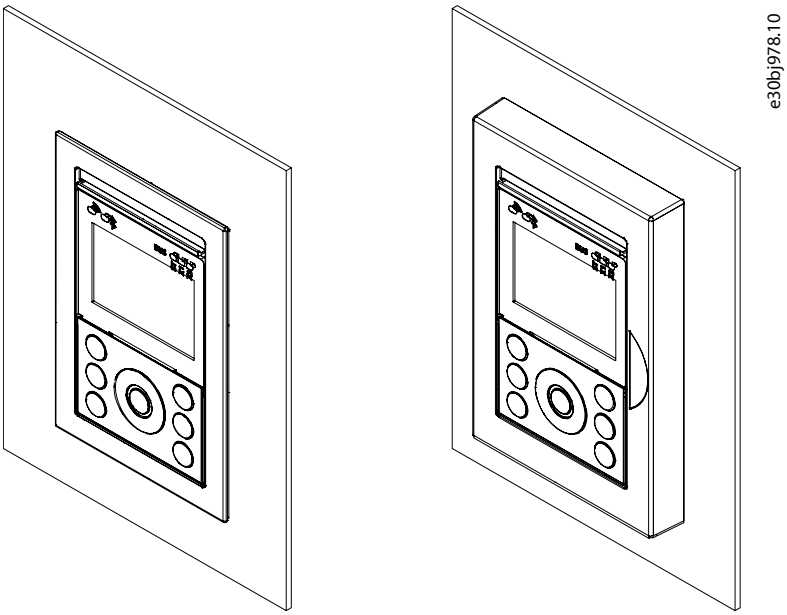

Figure 79: Control Panel Mounted in Flush Mounting Kit (Left) and Surface Mounting Kit (Right)

The available mounting kits and cable options are listed in 4.10 Options. For detailed information about installing mounting kits, refer to iC7 Series Control Panel Mounting Kits Installation Guide (danfoss.com).

8.17 Fiber Cable Requirements

The required fiber cable type is LC duplex cable assembly 0.5NA SI-POF.

The installation temperature of the fiber cable is -40...+85 °C (-40...+185 °F). The minimum bending radius is 25 mm (1.0 in).

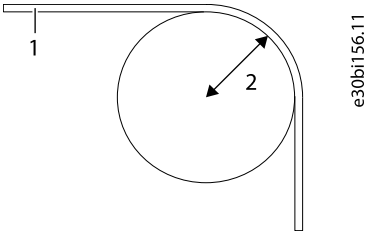

Figure 80: Bending Radius of the Fiber Cables

1	Cable	2	Bending radius (25 mm, 1.0 in)

Danfoss Drives Oy © 2026.09

9 Maintenance

9.1 Preventive Maintenance Recommendations

Generally, all technical equipment, including Danfoss drives, need a minimum level of preventive maintenance. To ensure trouble-free operation and long life of the drive, regular maintenance is recommended. It is also recommended as a good service practice to record a maintenance log with counter values, date, and time describing the maintenance and service actions.

Danfoss recommends the following inspections and service intervals for air-cooled drives/systems.

IMPORTANT: The service schedule for part replacements can vary depending on operating conditions. Under specific conditions, the combination of stressful operation and environmental conditions work together to reduce the lifetime of the components significantly. These conditions can include, for example, extreme temperature, dust, high humidity, hours of use, corrosive environment, and loading.

For operation in stressful conditions, Danfoss offers the DrivePro® Preventive Maintenance service. DrivePro® services extend the lifetime and increase the performance of the product with scheduled maintenance including customized part replacements. DrivePro® services are tailored to the specific application and operating conditions.

Table 44: Maintenance Schedule for Air-cooled Drives

Component	Inspection interval[1]	Service schedule[2]	Preventive maintenance actions
Installation			
Visual inspection	1 year	–	Check for the unusual, for example, for signs of overheating, aging, corrosion, and for dusty and damaged components.
Auxiliary equipment	1 year	According to manufacturer recommendations	Inspect equipment, switchgear, relays, disconnects, or fuses/circuit breakers. Examine the operation and condition for possible causes of operational faults or defects. The continuity check on fuses must be performed by trained service personnel.
EMC consideration	1 year	–	Inspect the wiring regarding the electromagnetic capability and the separation distance between control wiring and power cables.
Cable routing	1 year	–	Check for parallel routing of motor cables, mains wiring, and signal wiring. Avoid parallel routing. Avoid routing cables through free air without support. Check for aging and wearing of the cable insulation.
Control wiring	1 year	–	Check for tightness, damaged or crimped wires, or ribbon wires. Terminate the connections correctly with solid crimped ends. The use of shielded cables and grounded EMC plate, or a twisted pair is recommended.
Clearances	1 year	–	Check that the external clearances for proper airflow for cooling follow the requirements for the frame and product type. For clearances, refer to the local design regulations.
Sealing	1 year	–	Check that the sealing of the enclosure, the covers, and the cabinet doors are in good condition.
Corrosive environments	1 year	–	Conductive dust and aggressive gases, such as sulphide, chloride, and salt mist, can damage the electrical and mechanical components. Air filters do not remove airborne corrosive chemicals. Act based on the findings.
Drive			

Table 44: Maintenance Schedule for Air-cooled Drives - (continued)

Component	Inspection interval[1]	Service schedule[2]	Preventive maintenance actions
Programming	1 year	–	Check that the drive parameter settings are correct according to the motor, drive application, and I/O configuration. Only trained service personnel are allowed to perform this action.
Control panel	1 year	–	Check that the display pixels are intact. Check the event log for warnings and faults. Repetitive events are a sign of potential issues. If necessary, contact a local service center.
Drive cooling capacity	1 year	–	Check for blockages or constrictions in the air passages of the cooling channel. The heat sinks must be free of dust and condensation.
Capacitors, DC link	1 year	8–15+ years	The expected lifetime of the capacitors depends on the loading profile of the application and the ambient temperature. For applications with heavy loads in demanding environments or high ripple currents, replace electrolytic capacitors every 8 years and plastic foil capacitors every 12 years. If within the specifications of the drive type, replace every 10–15+ years. Only trained service personnel are allowed to perform this action.
Cleaning and filters	1 year	–	Clean the interior of the enclosure annually, and more frequently if necessary. The amount of dust in the filter or inside the enclosure is an indicator for when the next cleaning or filter replacement is required.
Fans	1 year	3–10 years	Inspect the condition and operational status of all cooling fans. With the power off, the fan axis should feel tight, and spinning the fan with a finger, the rotation should be almost silent and not have abnormal rotation resistance. When in RUN mode, fan vibration, excessive or strange noise is a sign of the bearings wearing, and the fan must be replaced.
Grounding	1 year	–	The drive system requires a dedicated ground wire connecting the drive, the output filter, and the motor to the building ground. Check that the ground connections are tight and free of paint or oxidation. Daisy-chain connections are not allowed. If applicable, braided straps are recommended.
PCB	1 year	10–12 years	Visually inspect the printed circuit boards for signs of damage or degrading due to aging, corrosive environments, dust, or environments with high temperatures. Only trained service personnel are allowed to perform the inspection and service action.
Power cables and wiring	1 year	–	Check for loose connections, aging, insulation condition, and proper torque to the drive connections. Check for proper rating of fuses and continuity check. Observe if there are any signs of operation in a demanding environment. For example, discoloration of the fuse housing can be a sign of condensation or high temperatures.
Vibration	1 year	–	Check for abnormal vibration or noise coming from the drive to ensure that the environment is stable for electronic components.
Insulator gaskets	1 year	10–15 years	Inspect the insulators for signs of degradation due to high temperature and aging. Replacement is based on findings or done at the same time as DC capacitor replacement. Only trained service personnel are allowed to perform this action.
Batteries	1 year	7–10 years	Replace the batteries according to the manufacturer recommendation. Replace the real-time clock battery in the control unit every 7–10 years.
Spare parts			

Danfoss Drives Oy © 2026.09

Table 44: Maintenance Schedule for Air-cooled Drives - (continued)

Component	Inspection interval[1]	Service schedule[2]	Preventive maintenance actions
Spare parts	1 year	2 years	Stock spares in their original boxes in a dry and clean environment. Avoid hot storage areas. Electrolytic capacitors require reforming as stated in the service schedule. The reforming must be performed by trained service personnel.
Exchange units and units stored for long periods before commissioning	1 year	2 years	Visually inspect for signs of damage, water, high humidity, corrosion, and dust within the visual field of view without disassembly. The exchange units with mounted electrolytic capacitors require reforming as stated in the service schedule. The reforming must be performed by trained service personnel.

1) Defined as the time after the commissioning/startup or the time from the previous inspection.

2) Defined as the time after the commissioning/startup or the time from the previous service schedule actions.

9.2 Using the Product Modified Label

In the accessories bag, there is also a "product modified" label. The function of the label is to tell the service personnel about the changes that are made to the product.

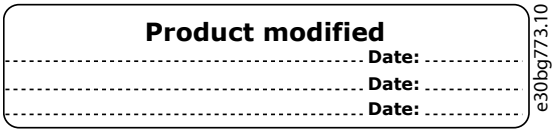

Figure 81: The Product Modified Label

1. Attach the label on the side of the product, in a place where it is easy to find.
   a. Attach the label, for example, next to the other labels on the product.
2. If changes are made to the product, write the change and date on the label.

9.3 Replacing the RTC Battery

The real-time clock (RTC) battery can be used to provide a reliable power source for the RTC. If power is lost in the control unit, the RTC battery keeps the internal real time. The time is used for scheduled activities and timestamping occurrences based on application needs. The RTC battery is optional and comes preinstalled if the option is selected.

⚠ CAUTION

RISK OF FIRE AND EXPLOSION

- Replace the battery with either a Panasonic BR1632A (3 V, 125 °C), Jauch Quartz CR1632 (246335) (3 V, 85 °C), or Renata Batteries CR1632 (3 V, 85 °C) coin-cell battery only. Using another battery may present a risk of fire or explosion. Only qualified personnel can exchange the battery.
- For detailed safety information, refer to the documentation provided with the battery.

⚠ CAUTION

RISK OF FIRE OR EXPLOSION

- Do not recharge or disassemble the battery, or dispose of it in fire.

1. Locate the RTC battery holder on the control board of the control unit.
2. Pull from the handle next to the text RTC BAT.

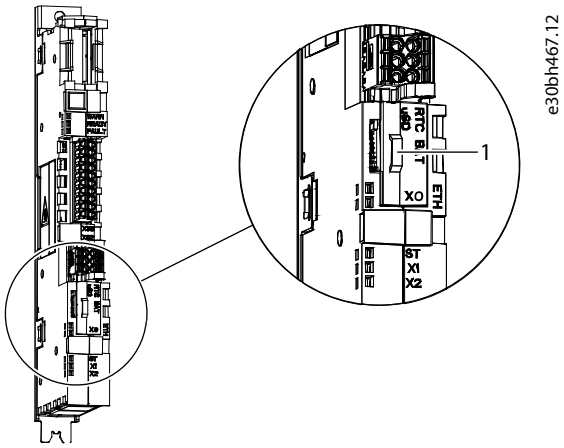

Figure 82: Location of the RTC Battery

1	The handle

The battery holder slides out.

3. To remove the battery, push it on the tooth side and slide it out of the plastic holder.

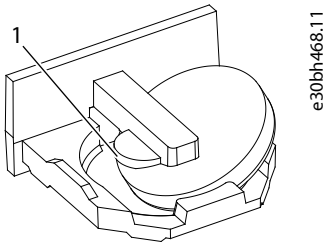

Figure 83: Replacing the Battery

1	The tooth

4. To put a new battery in place, start from the opposite side and slide it into the slot in the holder, the plus side towards the tooth.

The correct battery type is a coin type lithium battery.

5. Push the holder back into the control board.

9.4 Removing the Fan Assembly

1. Remove the 2 size M5 screws with a TX25 bit and open the fan cover.

Danfoss Drives Oy © 2026.09

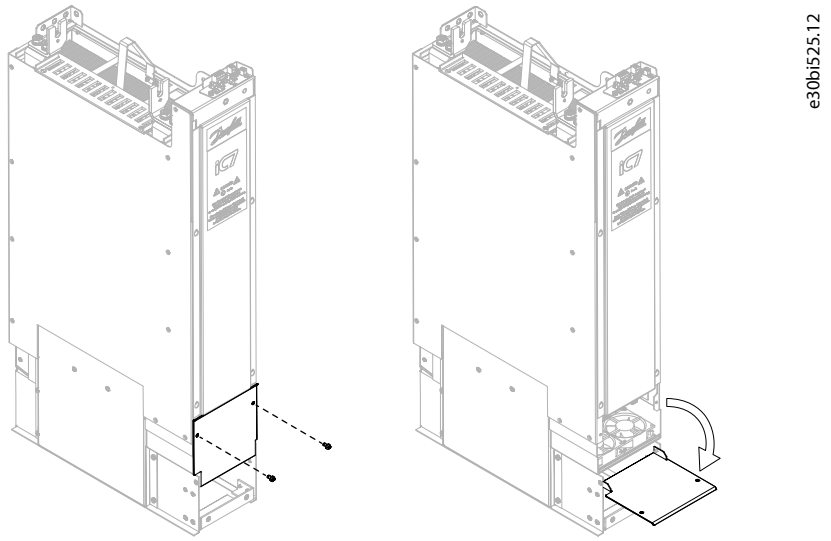

Figure 84: Releasing and Opening the Fan Cover

2. Disconnect the fan supply cables from the fan power supply.

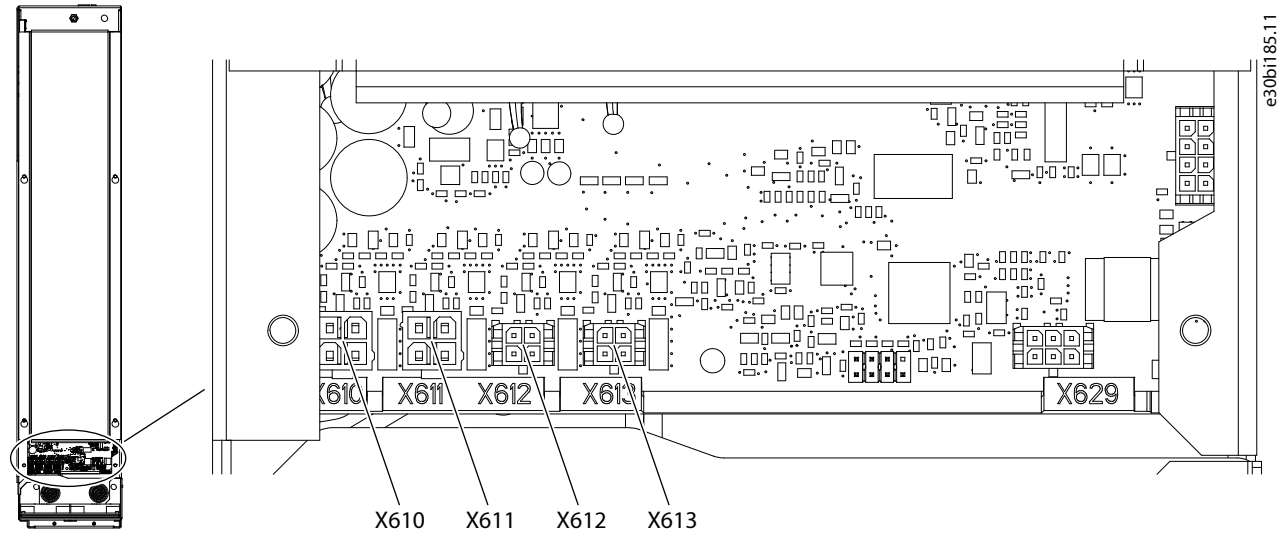

Figure 85: Fan Supply Terminals

X610	Supply to main cooling fan	X611	Supply to main cooling fan
X612	Supply to auxiliary compartment cooling fan	X613	Supply to auxiliary compartment cooling fan

3. Release and pull out the fan assembly.

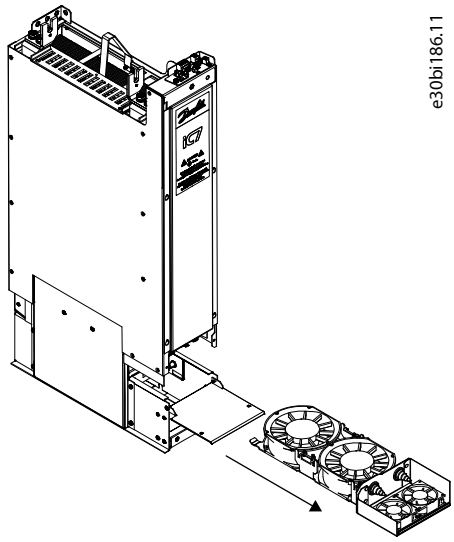

Figure 86: Removing the Fan Assembly

9.5 Installing MyDrive® Insight

1. To install the tool, go to https://suite.mydrive.danfoss.com/content/tools.
2. Install MyDrive® Insight.

   For more information on how to use the tool, see the online help in MyDrive® Insight.
3. Use MyDrive® Insight to connect the drive to a PC.

9.6 Downloading the Software without the Mains Supply

Use these instructions to update the drive with new software without mains.

Before downloading the software, read all safety precautions in this guide and other guides available for this product.

IMPORTANT:

The terminals at the top of the system module have been updated. Both the versions of the terminals are shown in 9.7 Recommissioning of the Drive. If downloading the software with the older terminals, connect the 24 V service voltage to terminals X80 and X67.

1. Connect an external 24 V DC supply to terminals X80 at the top of the power unit.
   a. The supply must have ±10% voltage accuracy.
   b. The supply current must be >2.5 A per power unit, depending on the configuration.
   c. If there is more than 1 power unit connected to the same control unit, connect an external 24 V DC supply to all the power units.
2. Commission the drive from MyDrive® Insight.
3. Disconnect the external 24 V DC supply from terminals X80 of the power unit.

9.7 Recommissioning of the Drive

To recommission the drive, use these instructions. There can be a need for recommissioning the drive even during the 1st startup if the hardware configuration has changed. The need is indicated on the control panel or through MyDrive® Insight. Recommissioning is needed, for example, when an option board is changed, or the LCL filter in use is not the same as in the factory commissioning.

Danfoss Drives Oy © 2026.09

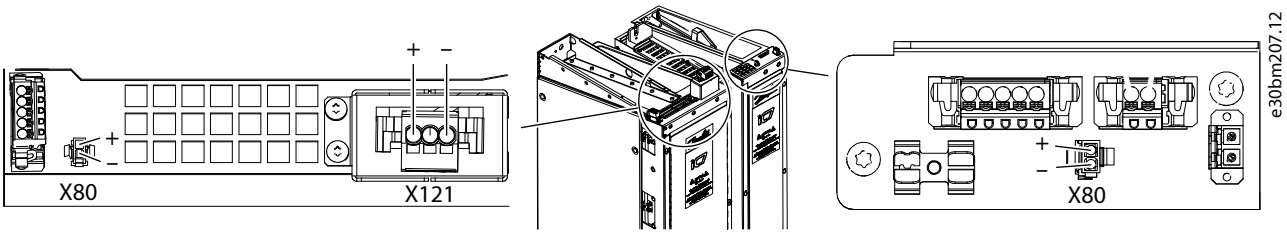

Figure 87: Service Voltage Terminals of the LCL Filter and the System Module (NFE, AFE, INU, GC)

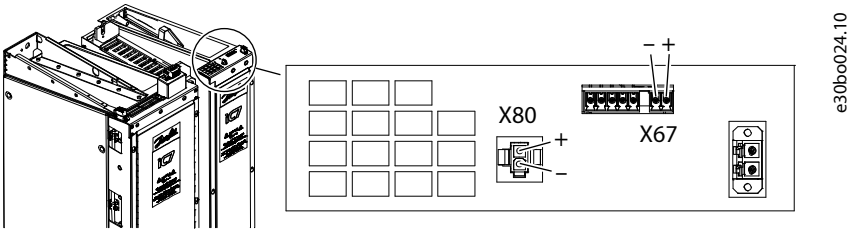

Figure 88: Previous Revision of the Service Voltage Terminals

IMPORTANT: The terminals at the top of the system module have been updated. The older versions of the terminals are shown in Figure 88. If performing the recommissioning of a module with the older terminals, connect the 24 V service voltage to terminals X80 and X67.

1. Power up all system modules and LCL filters.
   a. To power up the NFE, AFE, or GC module: Connect the 24 V service voltage to terminal X80.
   b. To power up the inverter module, use **1** of the following methods:

      Connect the 24 V service voltage to terminal X80.

      or

      Connect the DC-link voltage to the DC-link busbars of the power units.

   c. To power up the LCL filter, use **1** of the following methods:

      Connect the 24 V service voltage to terminal X80.

      or

      Connect the external DC-link voltage to the LCL fan supply terminal X121.

   - The supply must have ±5% voltage accuracy.
   - The supply current must be >2.5 A per power unit, depending on the configuration. This current is also enough for the control unit.
   - If there is more than 1 power unit connected to the same control unit, connect an external 24 V DC supply to all the power units.

2. Commission the drive from MyDrive® Insight or the control panel.
3. Disconnect the external 24 V DC supply from terminal X80 of the system modules and LCL filters.

10 Specifications

10.1 Tightening Torques

Table 45: Tightening Torques

Bolt	Tightening torque [Nm (in-lb)]	Maximum inward thread length [mm (in)]
M8	20 (177)	10 (0.39)
M10	40 (354)	22 (0.87)
M12	70 (620)	22 (0.87)
Grounding bolt (M8)	13.5 (119)	–

Danfoss Drives Oy © 2026.09

10.2 Dimensions

10.2.1 Dimensions of the NFE Module, NR11 with Short Integration Unit (+AE01)

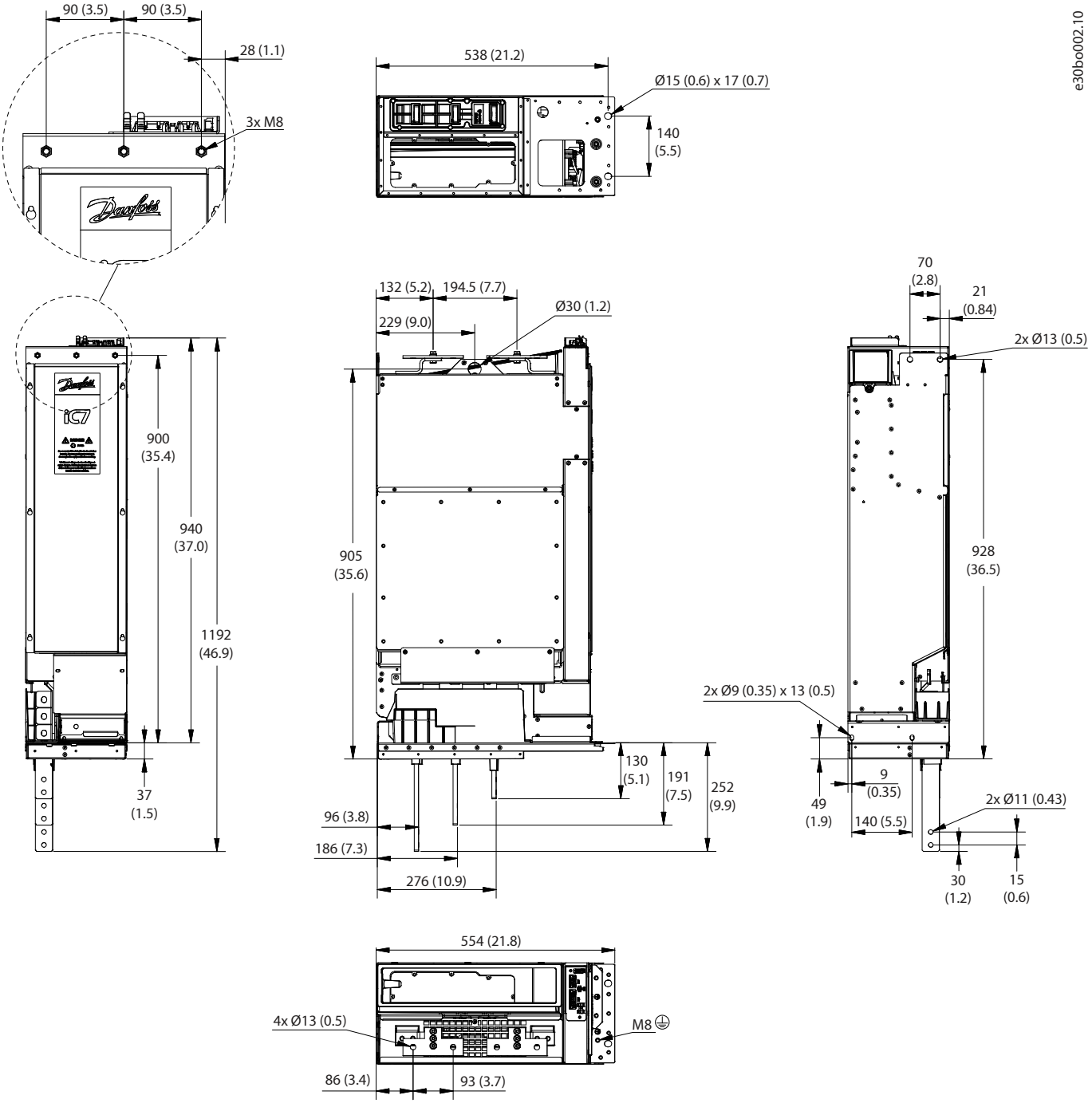

Figure 89: Dimensions of the NFE Module, NR11 with Short Integration Unit (+AE01)

10.2.2 Dimensions of the NFE Module, NR11 with Standard Integration Unit (+AE10)

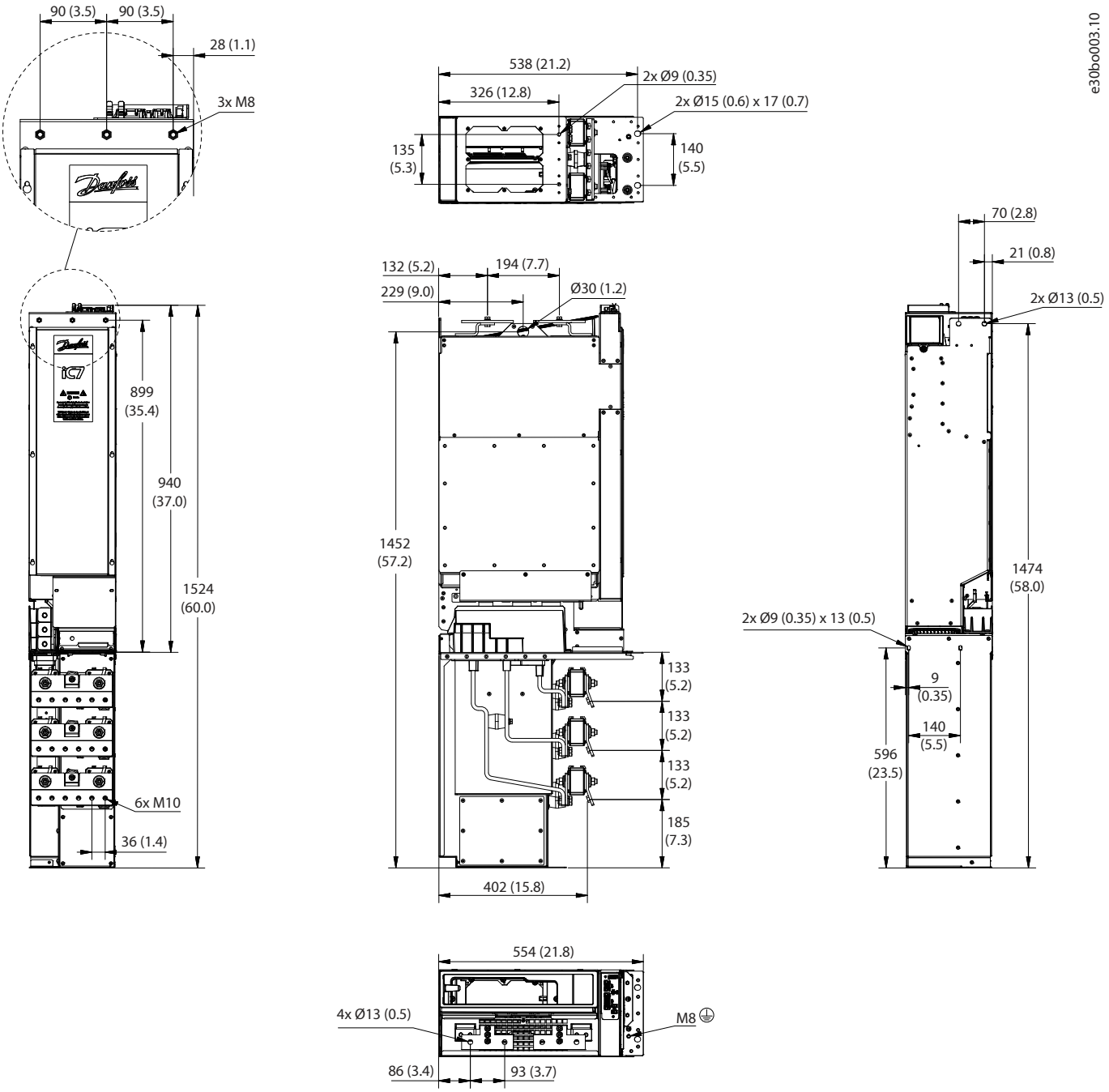

Figure 90: Dimensions of the NFE Module, NR11 with Standard Integration Unit (+AE10)

Danfoss Drives Oy © 2026.09

10.2.3 Dimensions of the AFE Module, AR10

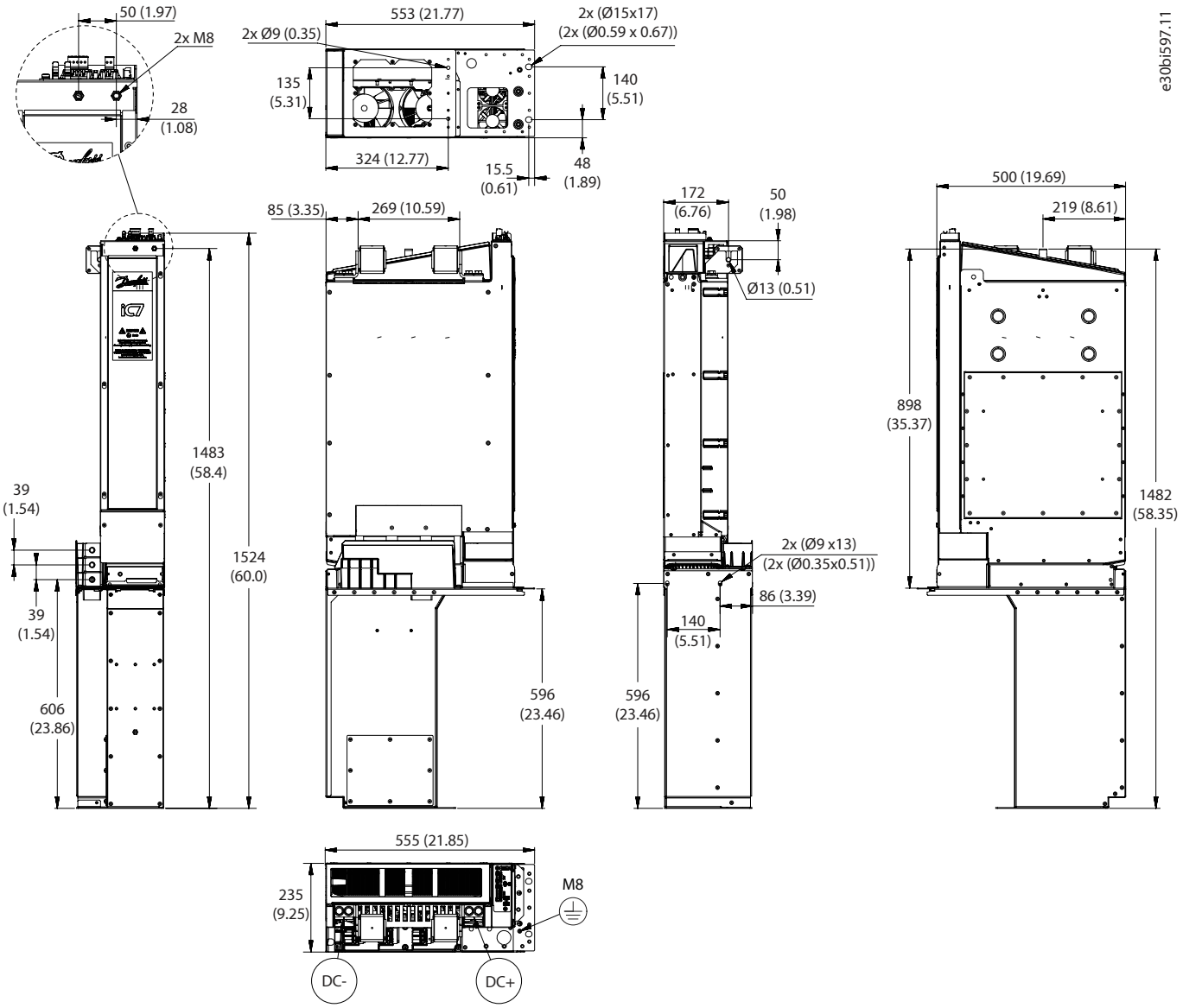

Figure 91: Dimensions of the AFE Module in mm (in), AR10

10.2.4 Dimensions of the AFE Module, AR10, with the Short Integration Unit (+AE01)

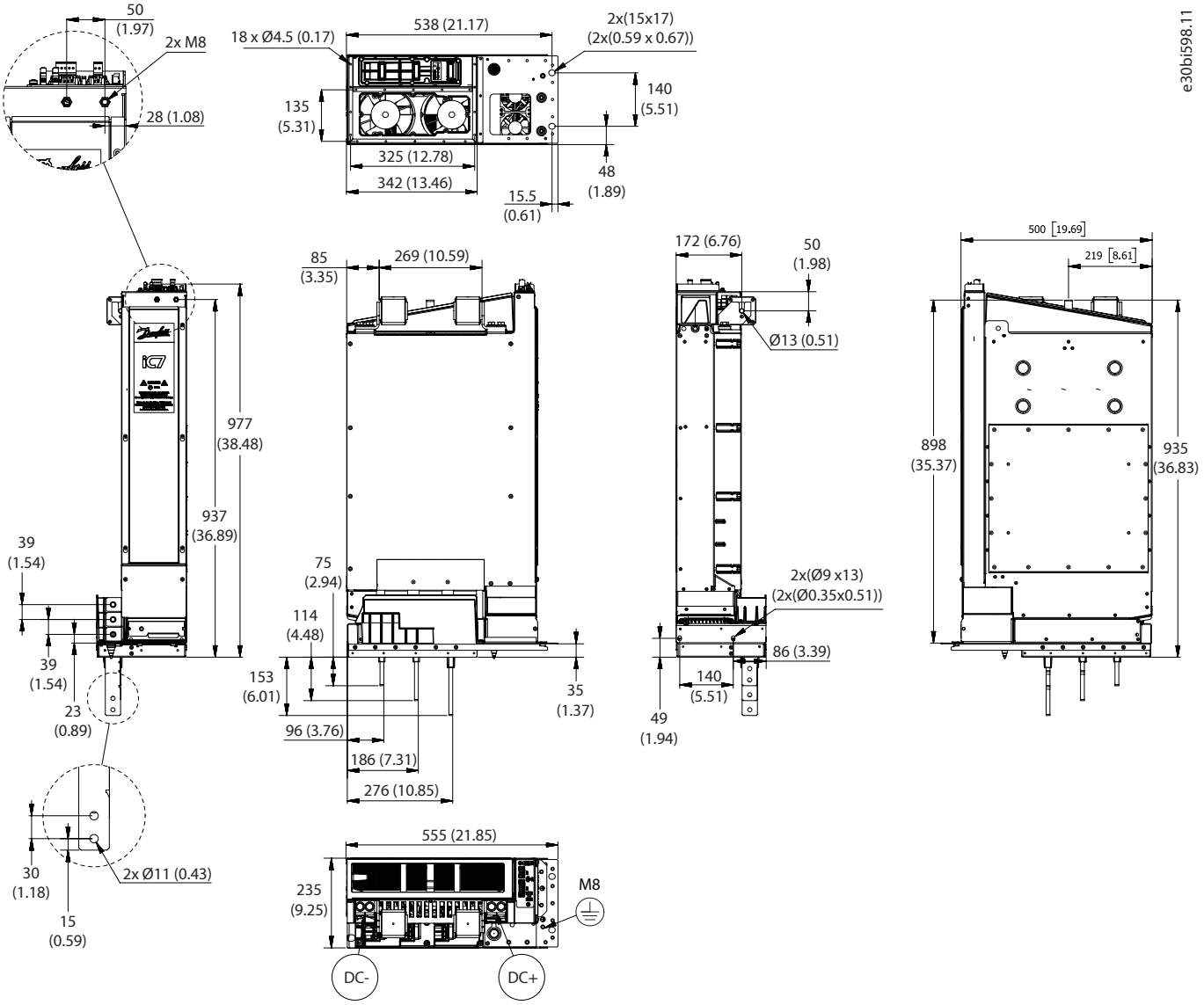

Figure 92: Dimensions of the AFE Module, AR10, with the Short Integration Unit (+AE01) in mm (in)

Danfoss Drives Oy © 2026.09

10.2.5 Dimensions of the AFE Module, AR11

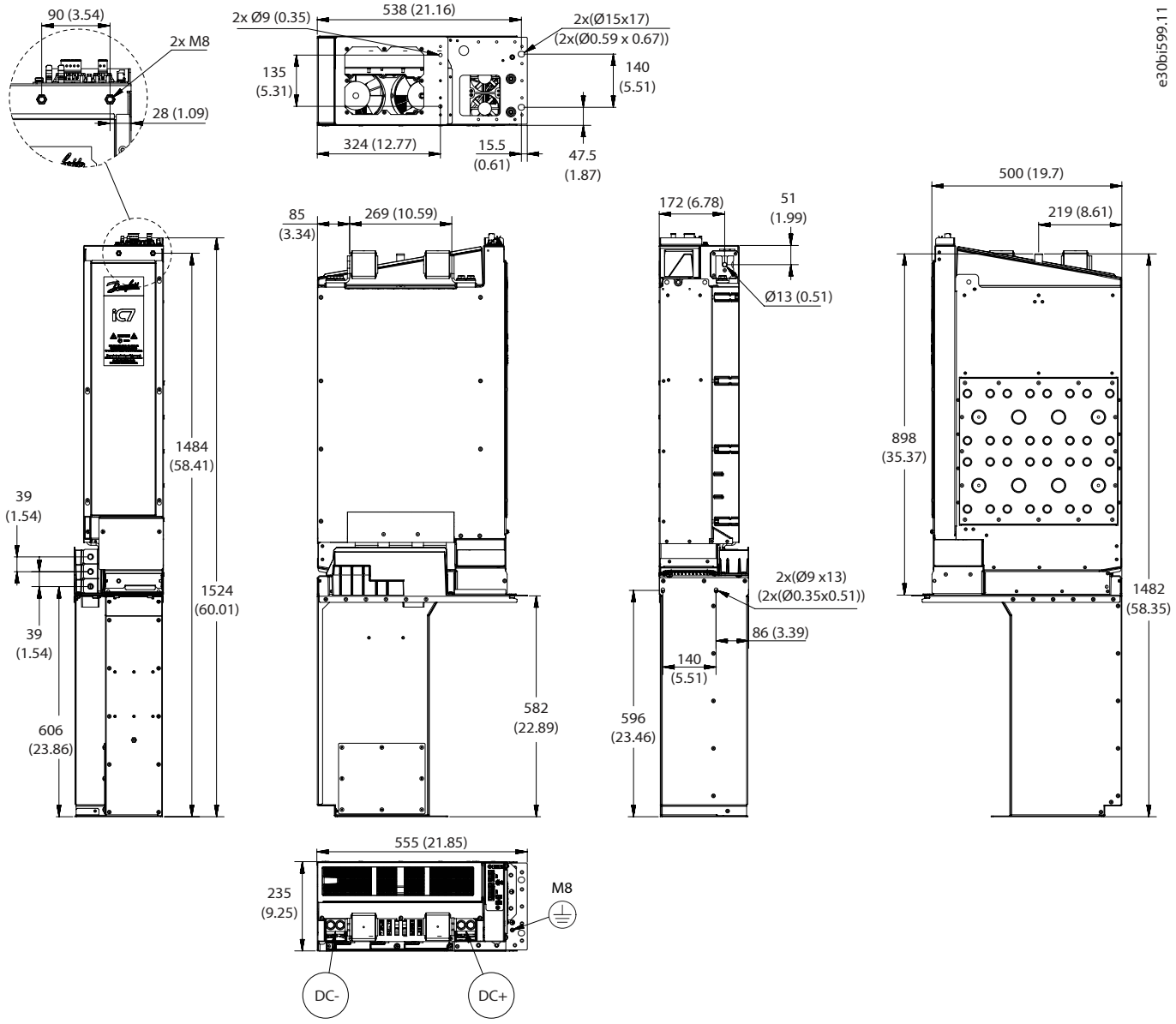

Figure 93: Dimensions of the AFE Module in mm (in), AR11

10.2.6 Dimensions of the AFE Module, AR11, with the Short Integration Unit (+AE01)

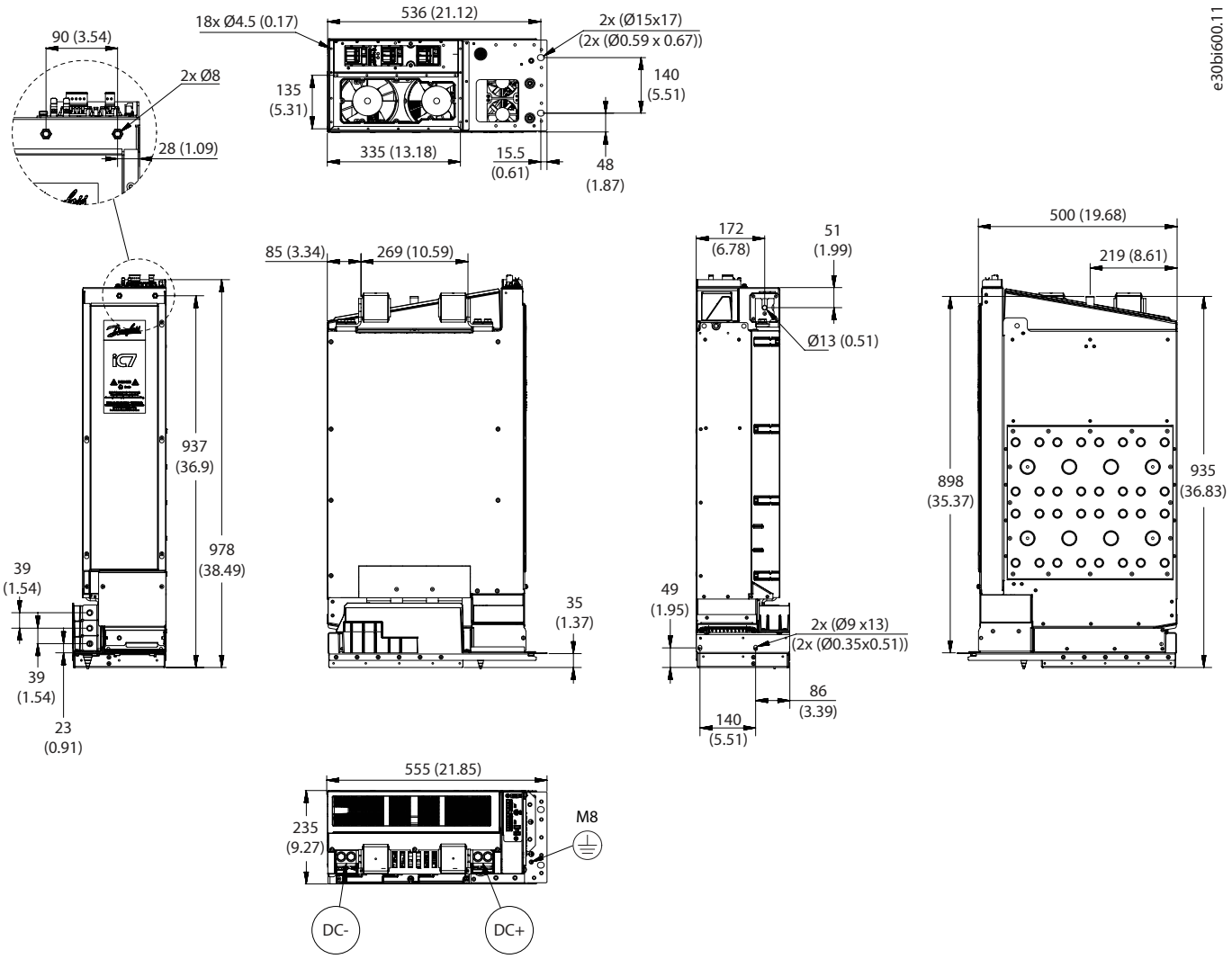

Figure 94: Dimensions of the AFE Module, AR11, with the Short Integration Unit (+AE01) in mm (in)

Danfoss Drives Oy © 2026.09

10.2.7 Dimensions of the LCL Filter, LCL10, and the AFE Module, AR10

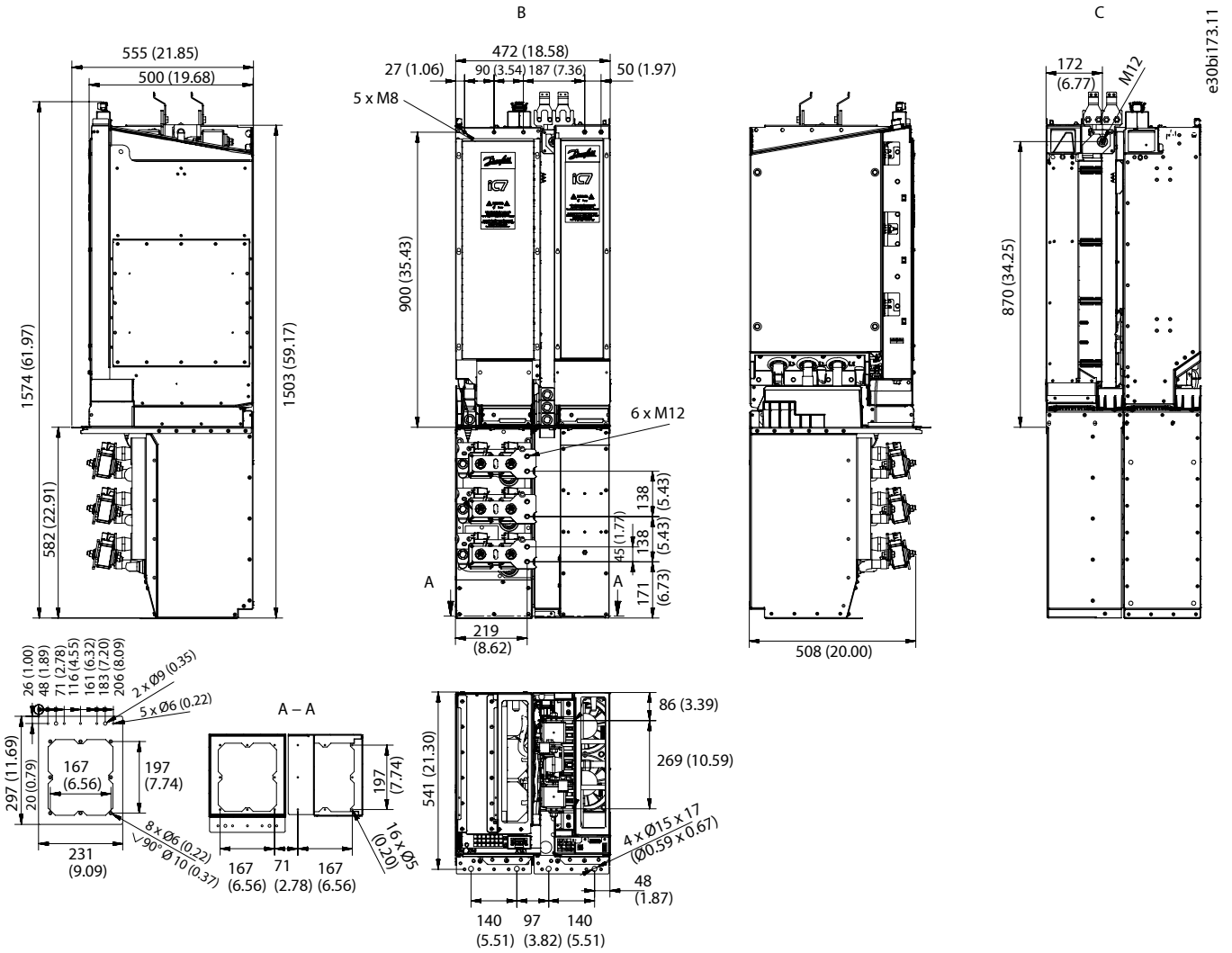

Figure 95: Dimensions of the LCL Filter, LCL10, and the AFE Module, AR10 in mm (in)

B	Front	C	Back

10.2.8 Dimensions of the LCL Filter, LCL10, and the AFE Module, AR10, with the Short Integration Unit (+AE01)

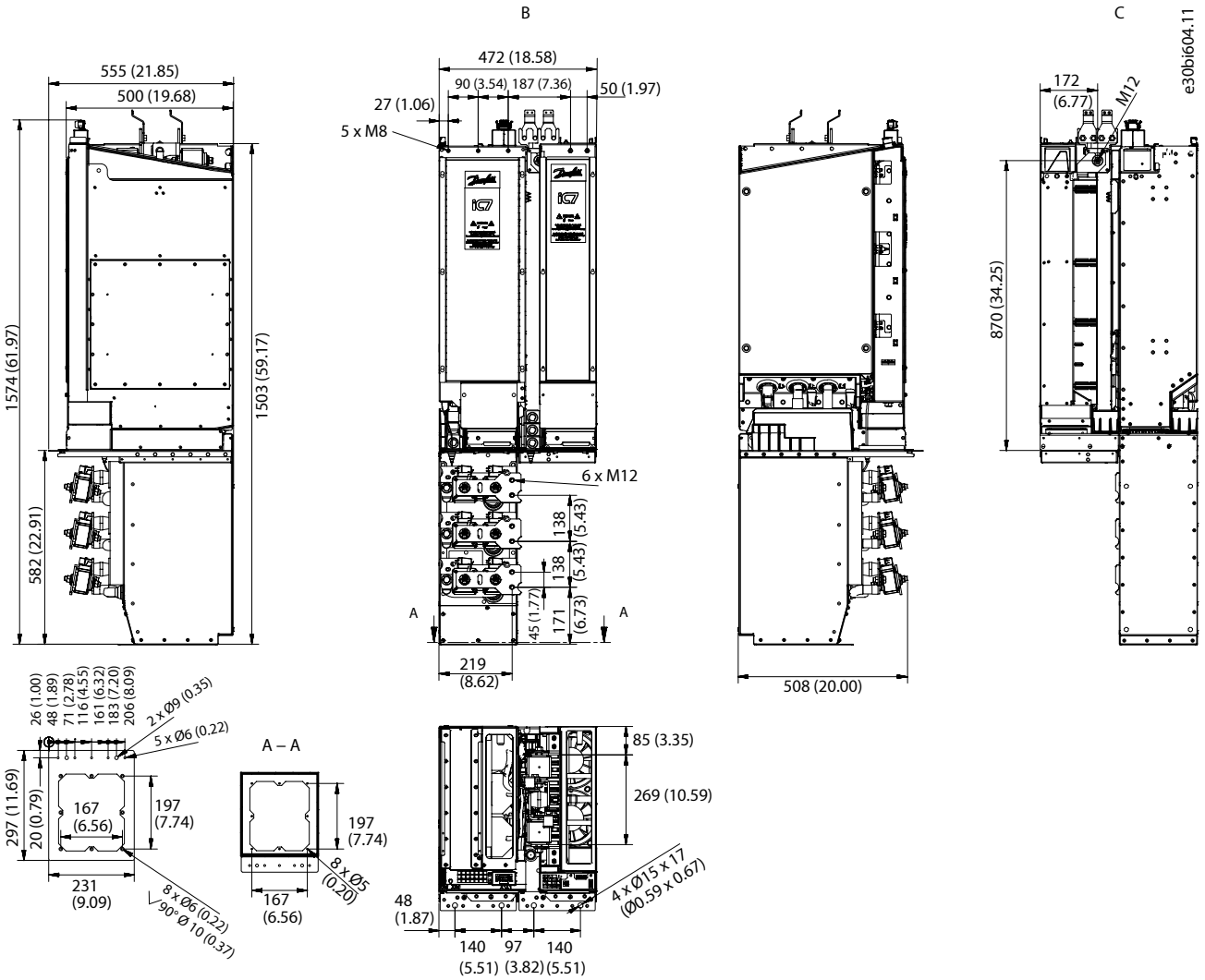

Figure 96: Dimensions of the LCL Filter, LCL10, and the AFE Module, AR10, with the Short Integration Unit (+AE01) in mm (in)

B	Front	C	Back

Danfoss Drives Oy © 2026.09

10.2.9 Dimensions of the LCL Filter, LCL11, and the AFE Module, AR11, with the Standard Integration Unit (+AE10)

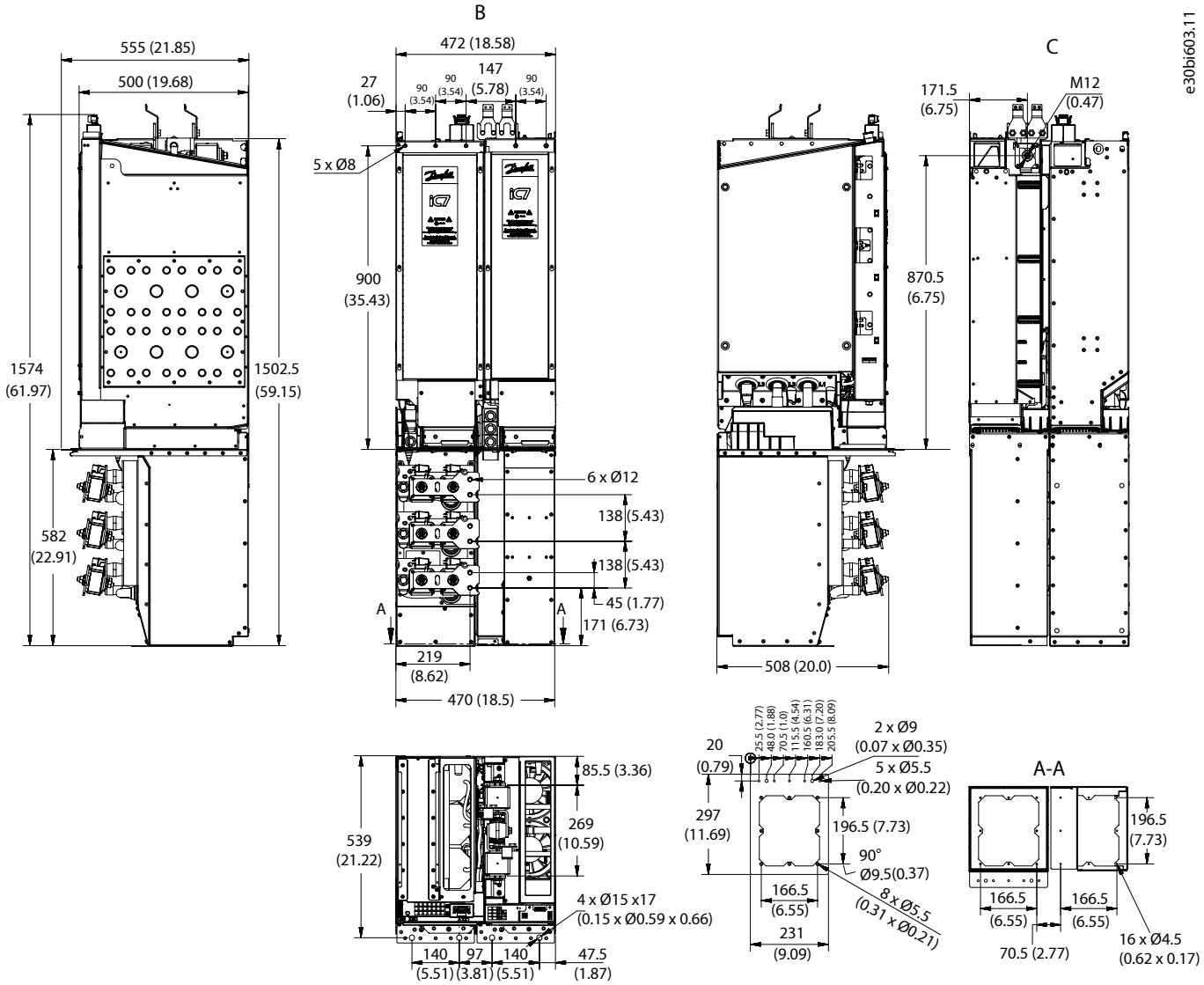

Figure 97: Dimensions of the LCL Filter, LCL11, and the AFE Module, AR11, with the Standard Integration Unit (+AE10) in mm (in)

B	Front	C	Back

10.2.10 Dimensions of the LCL Filter, LCL11, and the AFE Module, AR11, with the Short Integration Unit (+AE01)

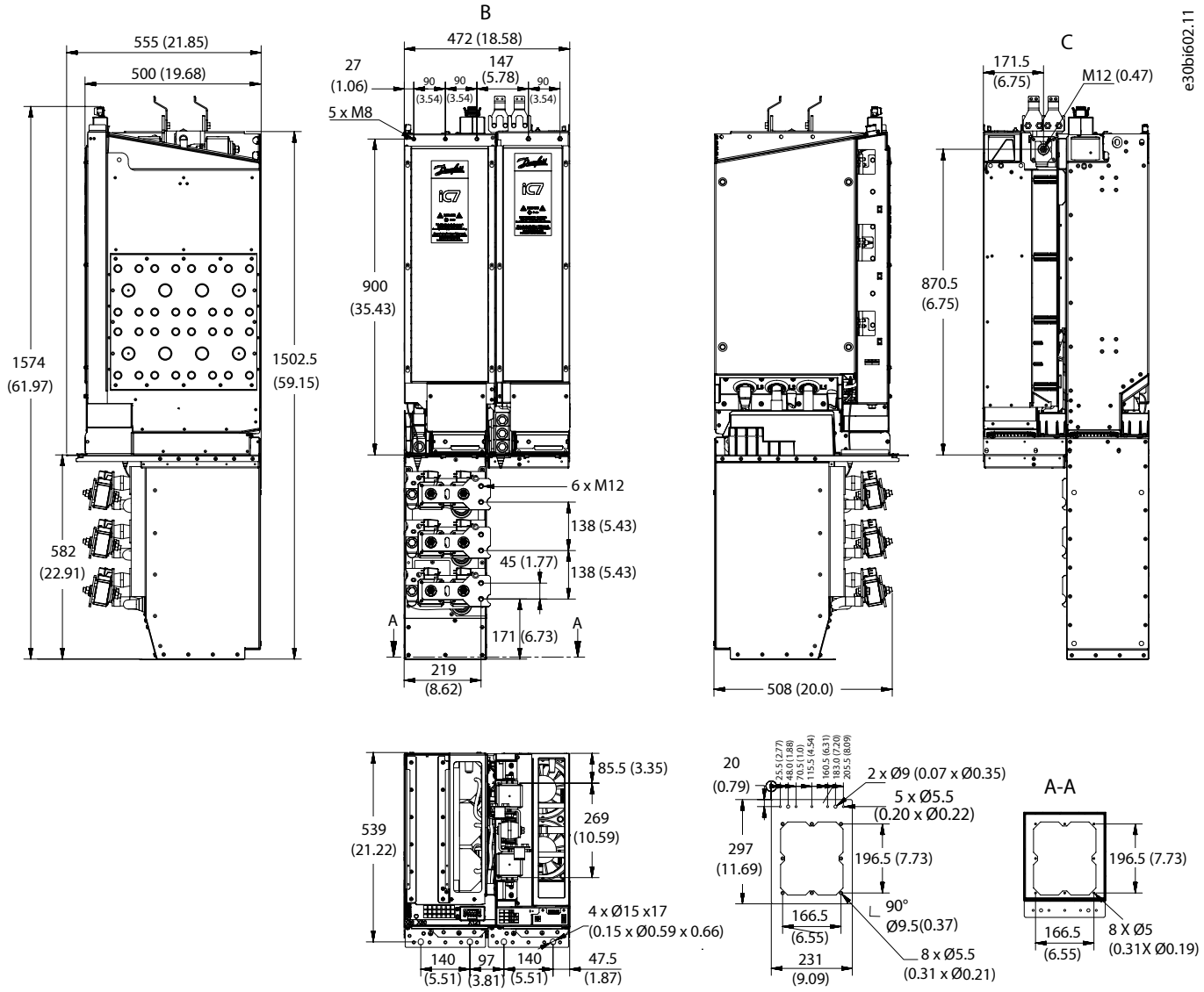

Figure 98: Dimensions of the LCL Filter, LCL11, and the AFE Module, AR11, with the Short Integration Unit (+AE01) in mm (in)

B	Front	C	Back

Danfoss Drives Oy © 2026.09

10.2.11 Dimensions of the LCL Filter, LCL11W, and the AFE Module, AR11, with the Standard Integration Unit (+AE10)

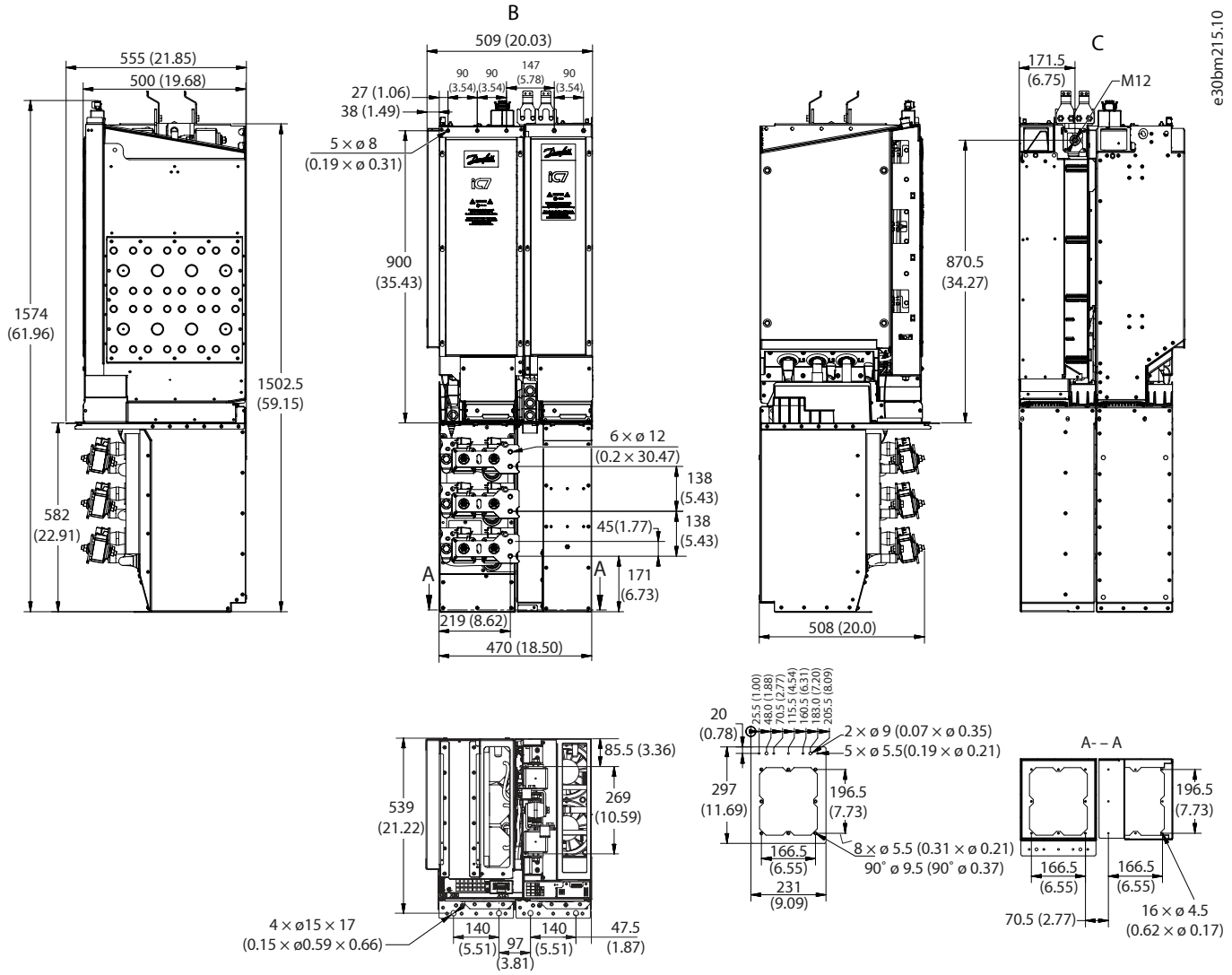

Figure 99: Dimensions of the LCL Filter, LCL11W, and the AFE Module, AR11, with the Standard Integration Unit (+AE10) in mm (in)

B	Front	C	Back

10.2.12 Dimensions of the LCL Filter, LCL11W, and the AFE Module, AR11, with the Short Integration Unit (+AE01)

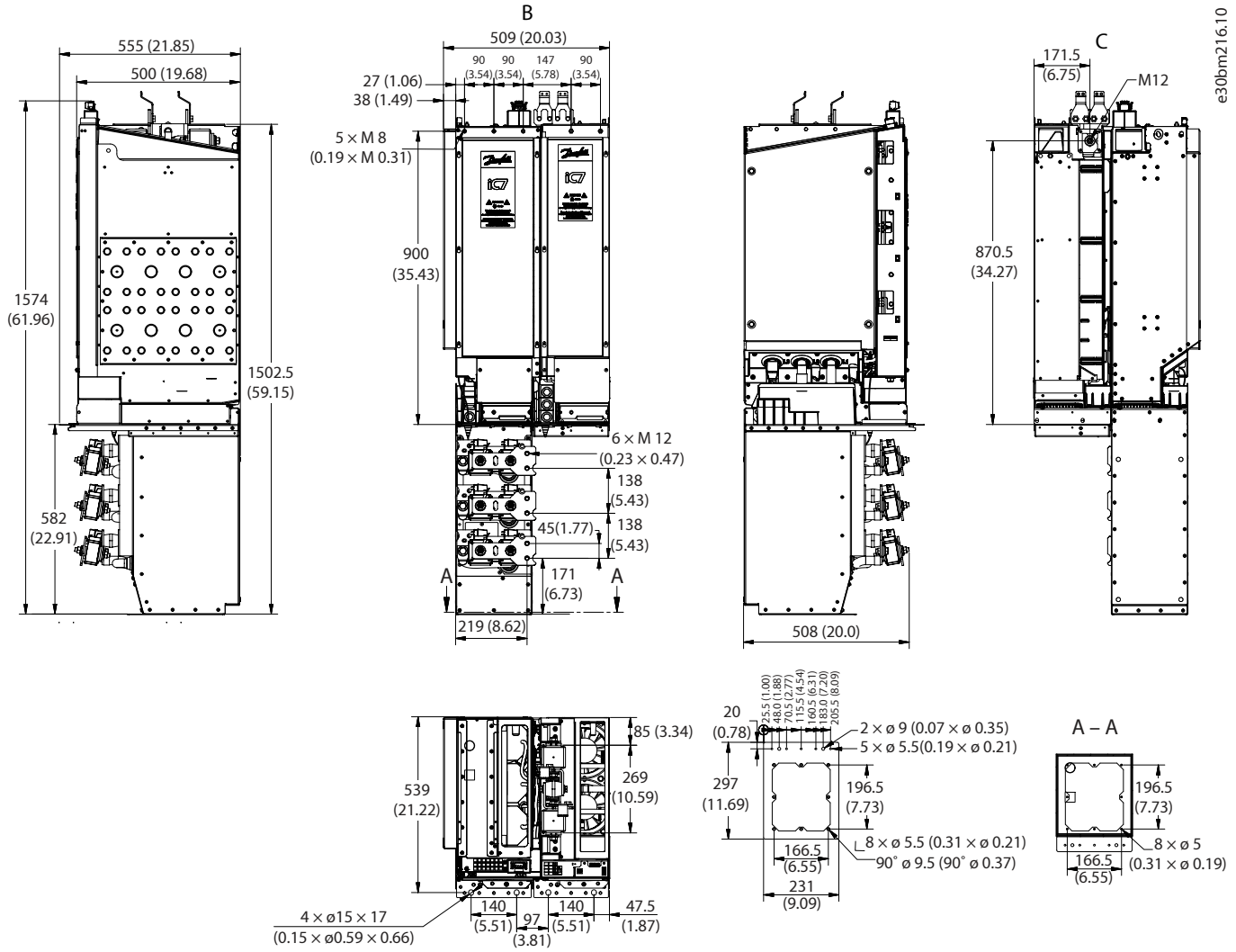

Figure 100: Dimensions of the LCL Filter, LCL11W, and the AFE Module, AR11, with the Short Integration Unit (+AE01) in mm (in)

B	Front	C	Back

Danfoss Drives Oy © 2026.09

10.2.13 Dimensions of the LCL Filter, LCL10 (514 A) and LCL11 (816 A)

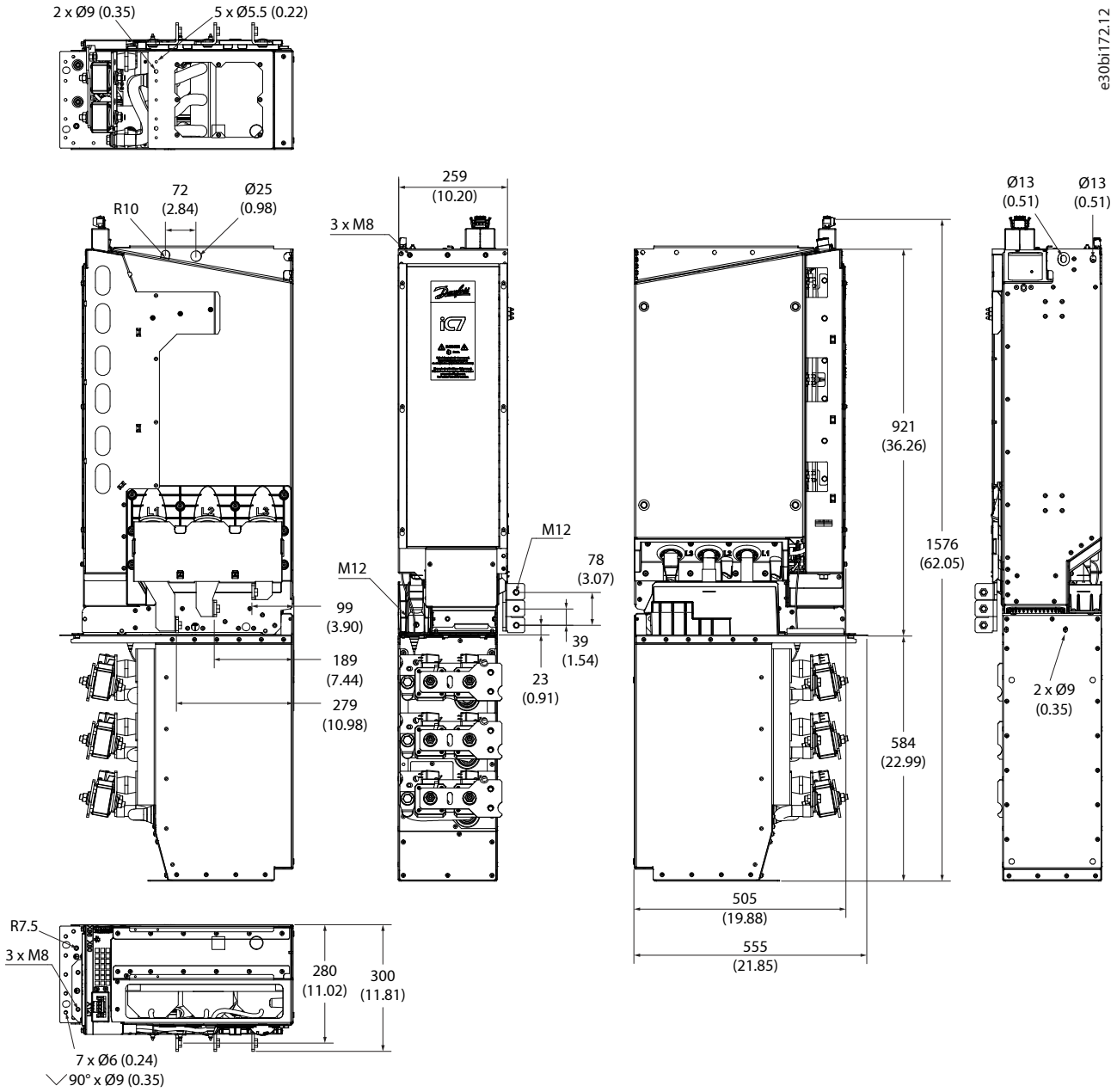

Figure 101: Dimensions of the LCL Filter, LCL10 (514 A) and LCL11 (816 A) in mm (in)

10.2.14 Dimensions of the LCL Filter, LCL11W and LC11W (820 A)

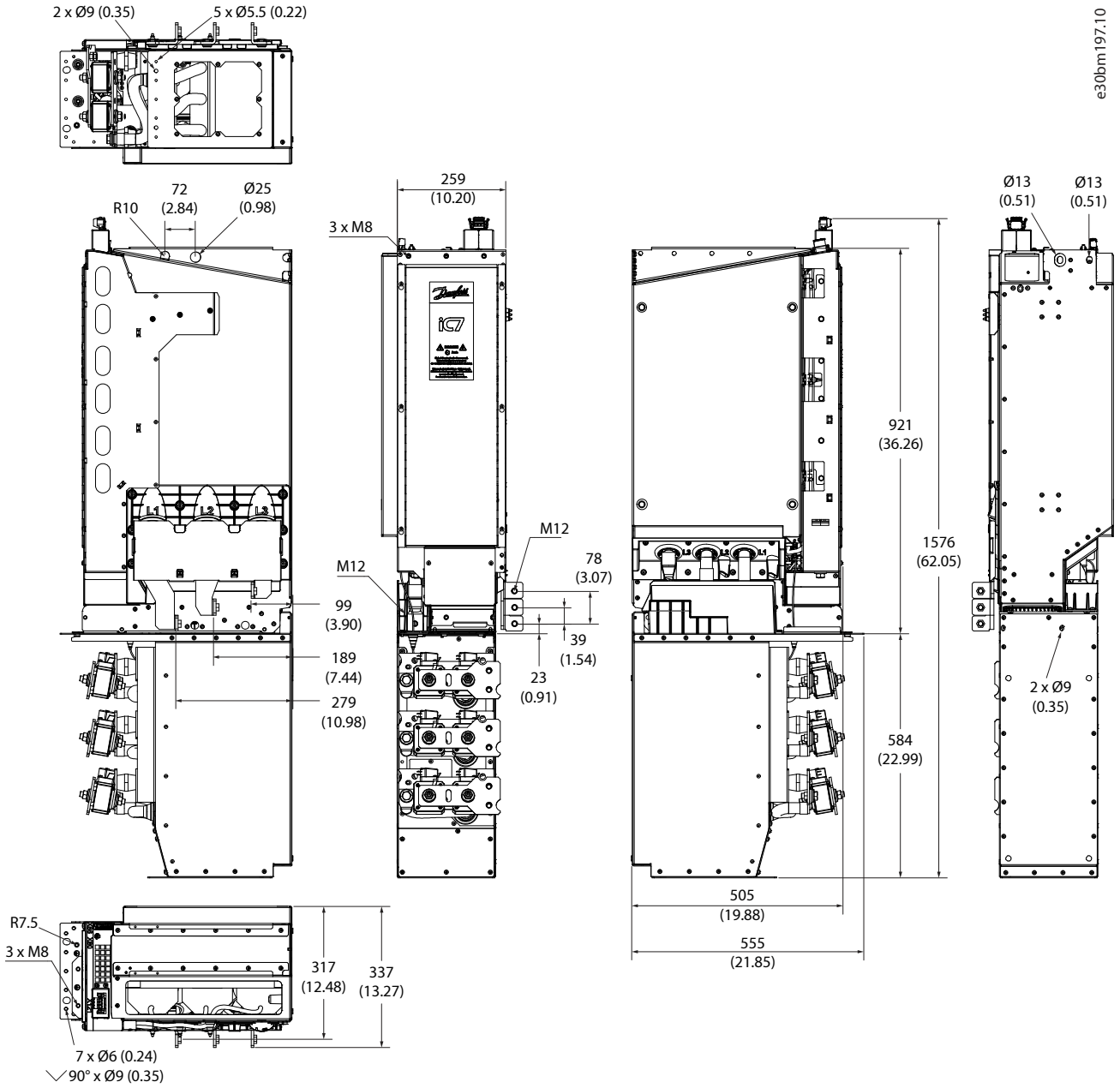

Figure 102: Dimensions of the LCL Filter, LCL11W (820 A) and LC11W (820 A) in mm (in)

Danfoss Drives Oy © 2026.09

10.2.15 Dimensions of the Inverter Module, IM10

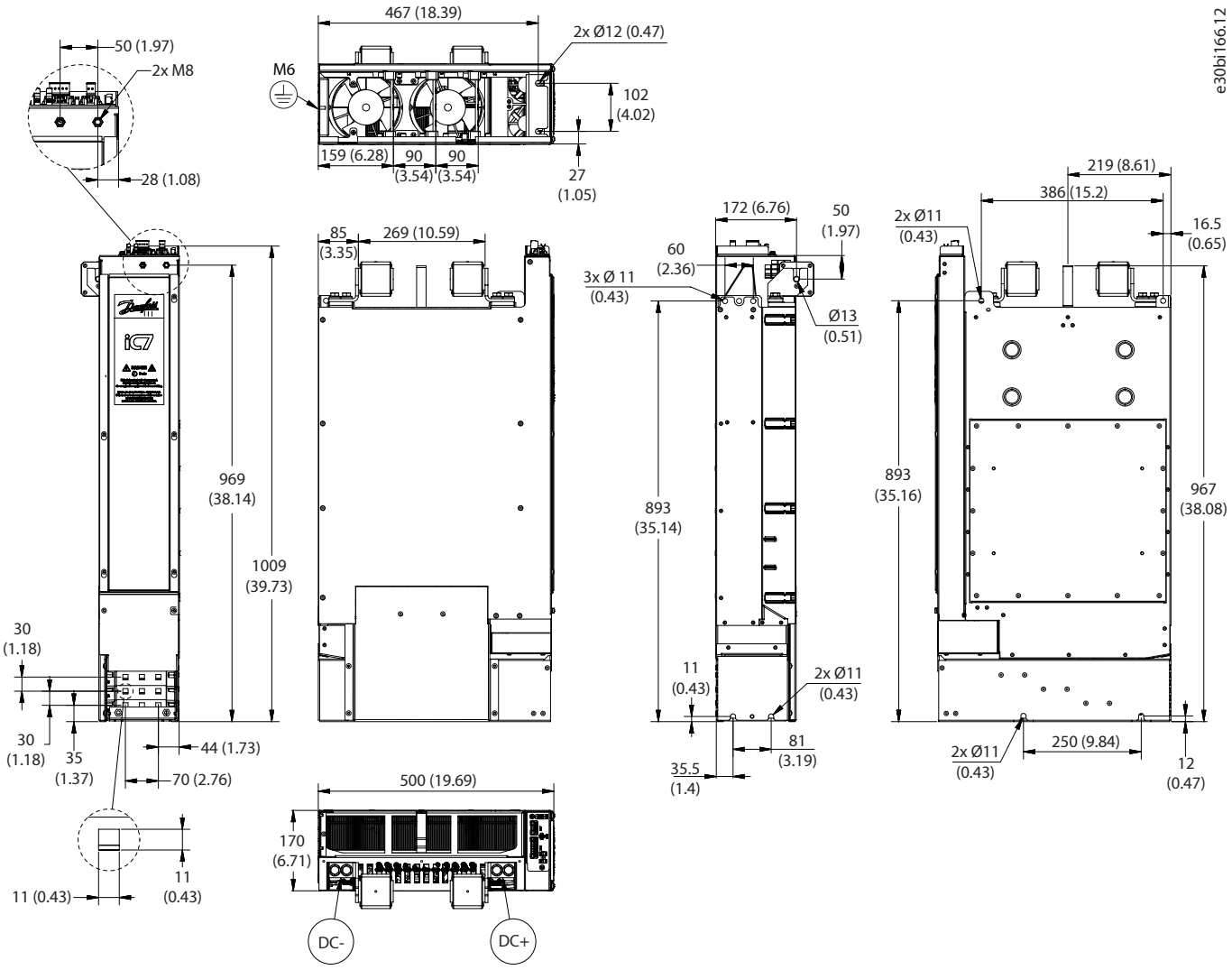

Figure 103: Dimensions of the Inverter Module in mm (in), IM10

10.2.16 Dimensions of the Inverter Module, IM11

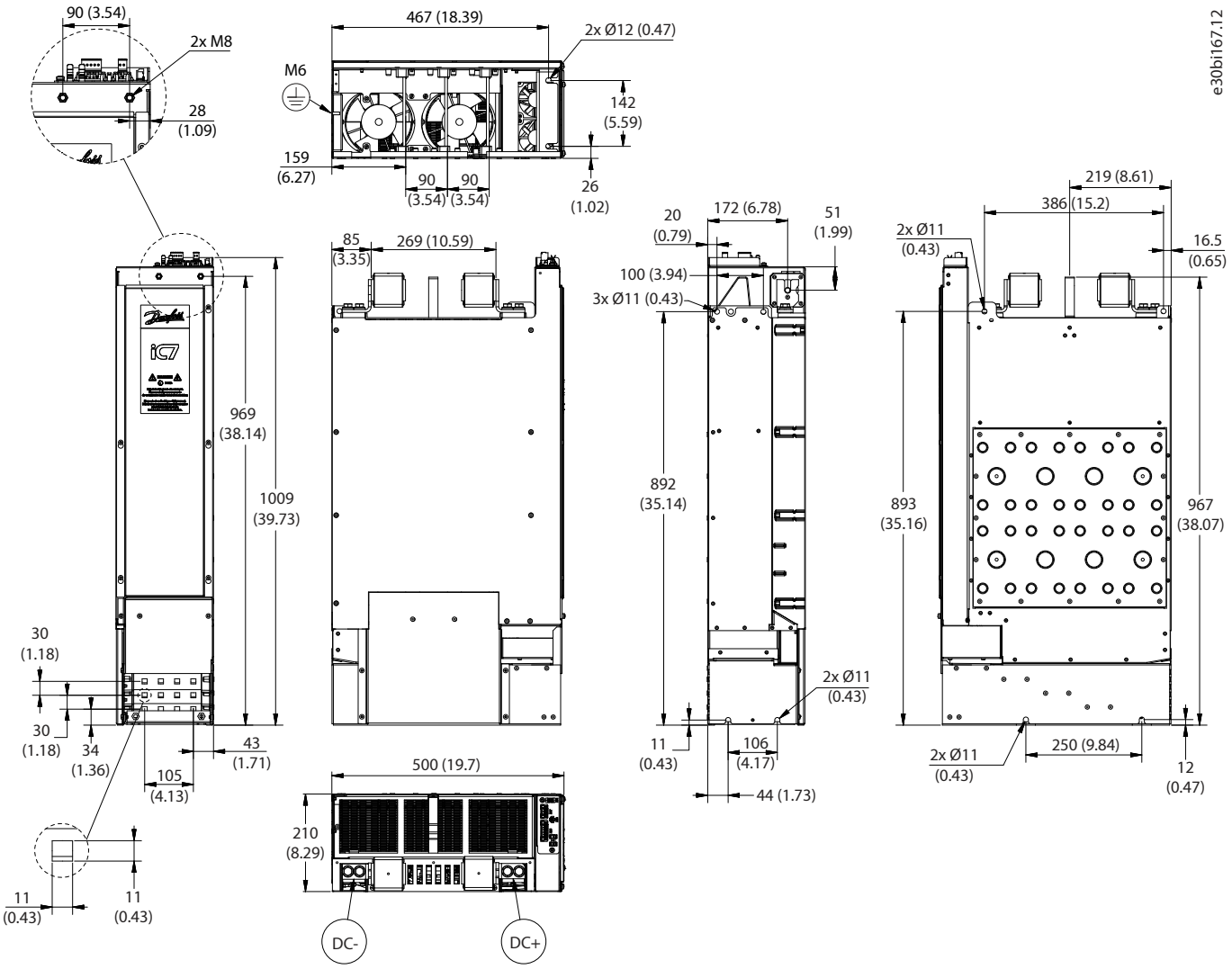

Figure 104: Dimensions of the Inverter Module in mm (in), IM11

Danfoss Drives Oy © 2026.09

10.2.17 Dimensions of the Inverter Module, IR10

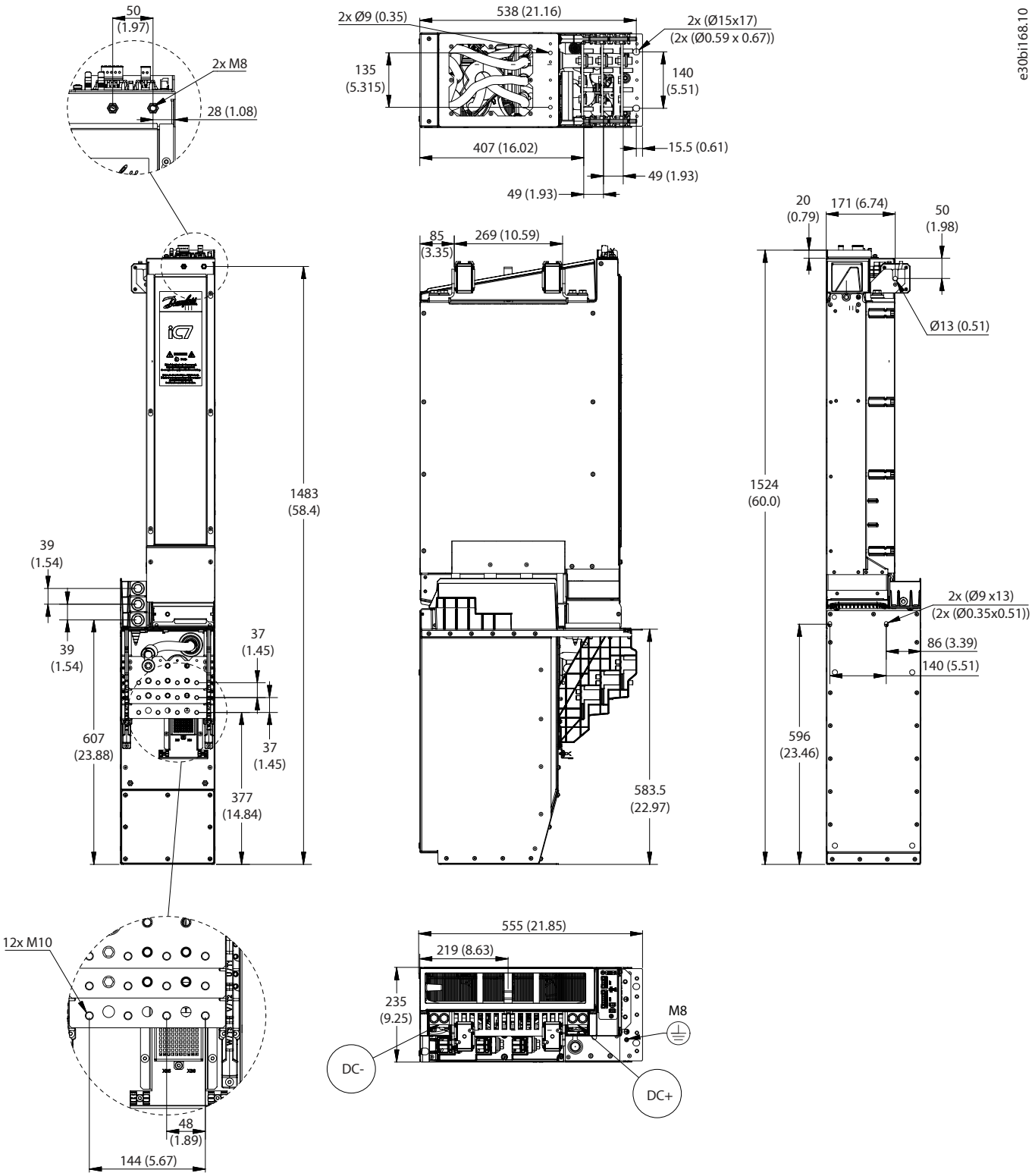

Figure 105: Dimensions of the Inverter Module in mm (in), IR10

10.2.18 Dimensions of the Inverter Module, IR10 with Short Integration Unit (+AE01)

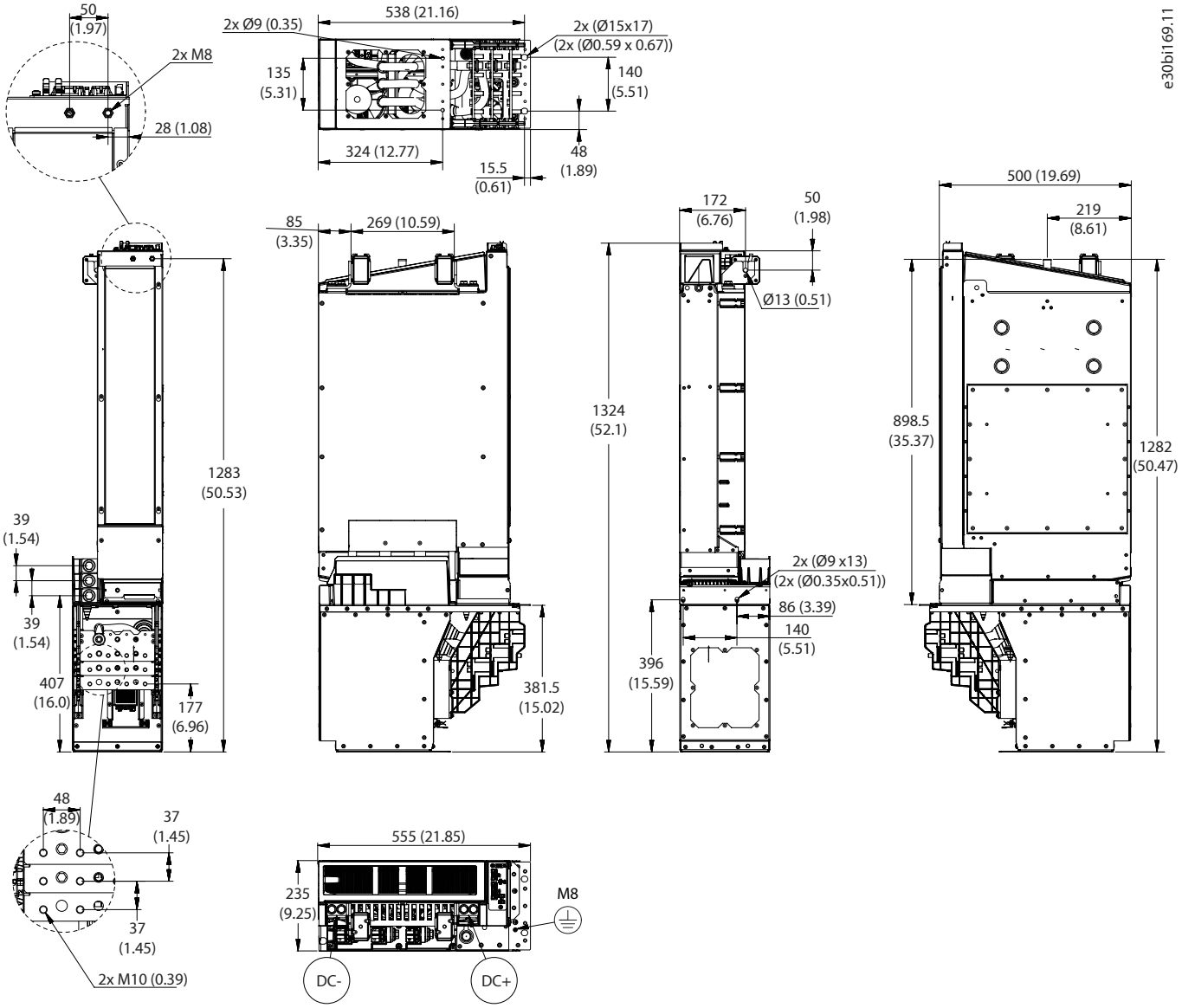

Figure 106: Dimensions of the Inverter Module in mm (in), IR10 with Short Integration Unit (+AE01)

Danfoss Drives Oy © 2026.09

10.2.19 Dimensions of the Inverter Module, IR11

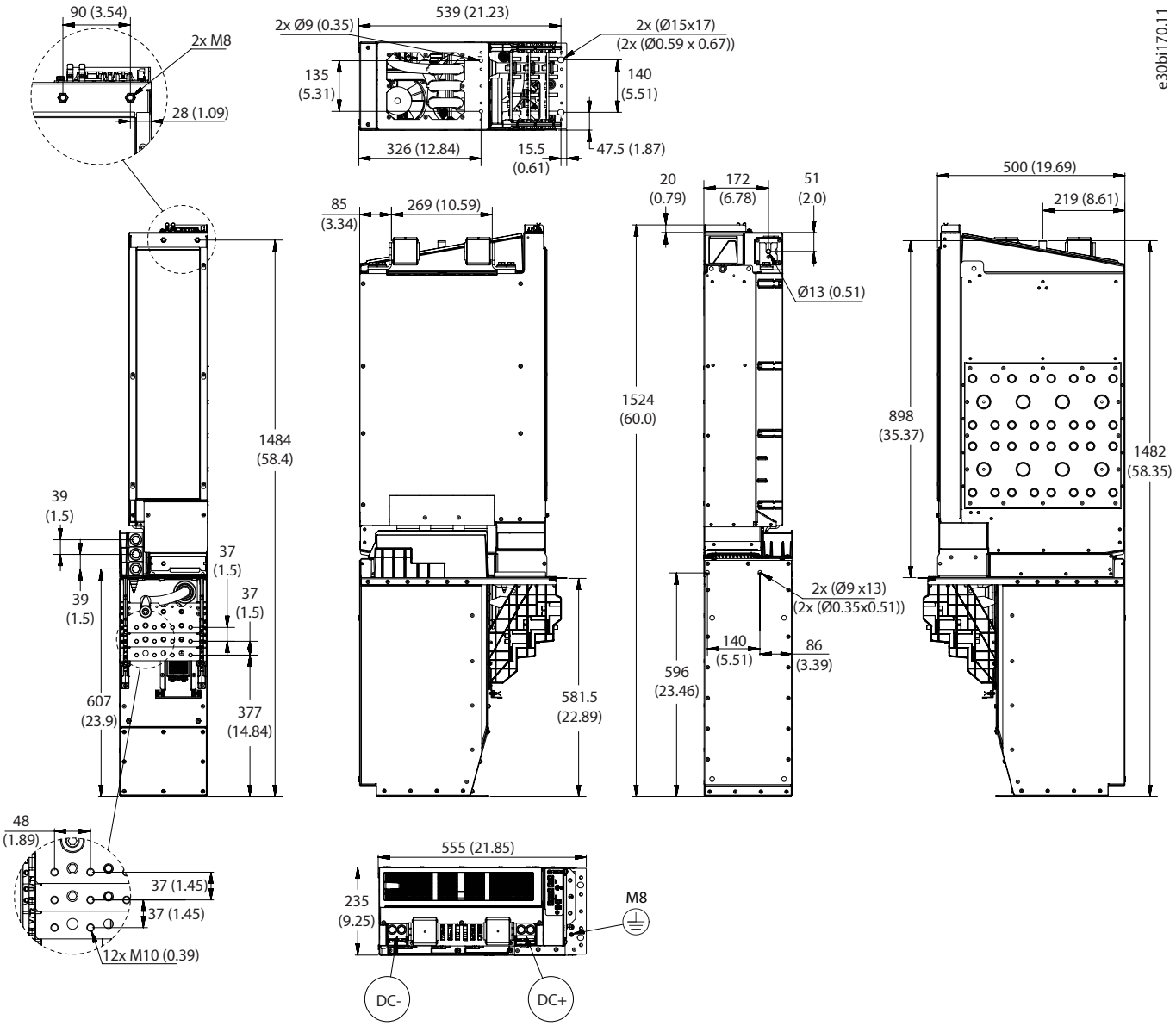

Figure 107: Dimensions of the Inverter Module in mm (in), IR11

10.2.20 Dimensions of the Inverter Module, IR11 with Short Integration Unit (+AE01)

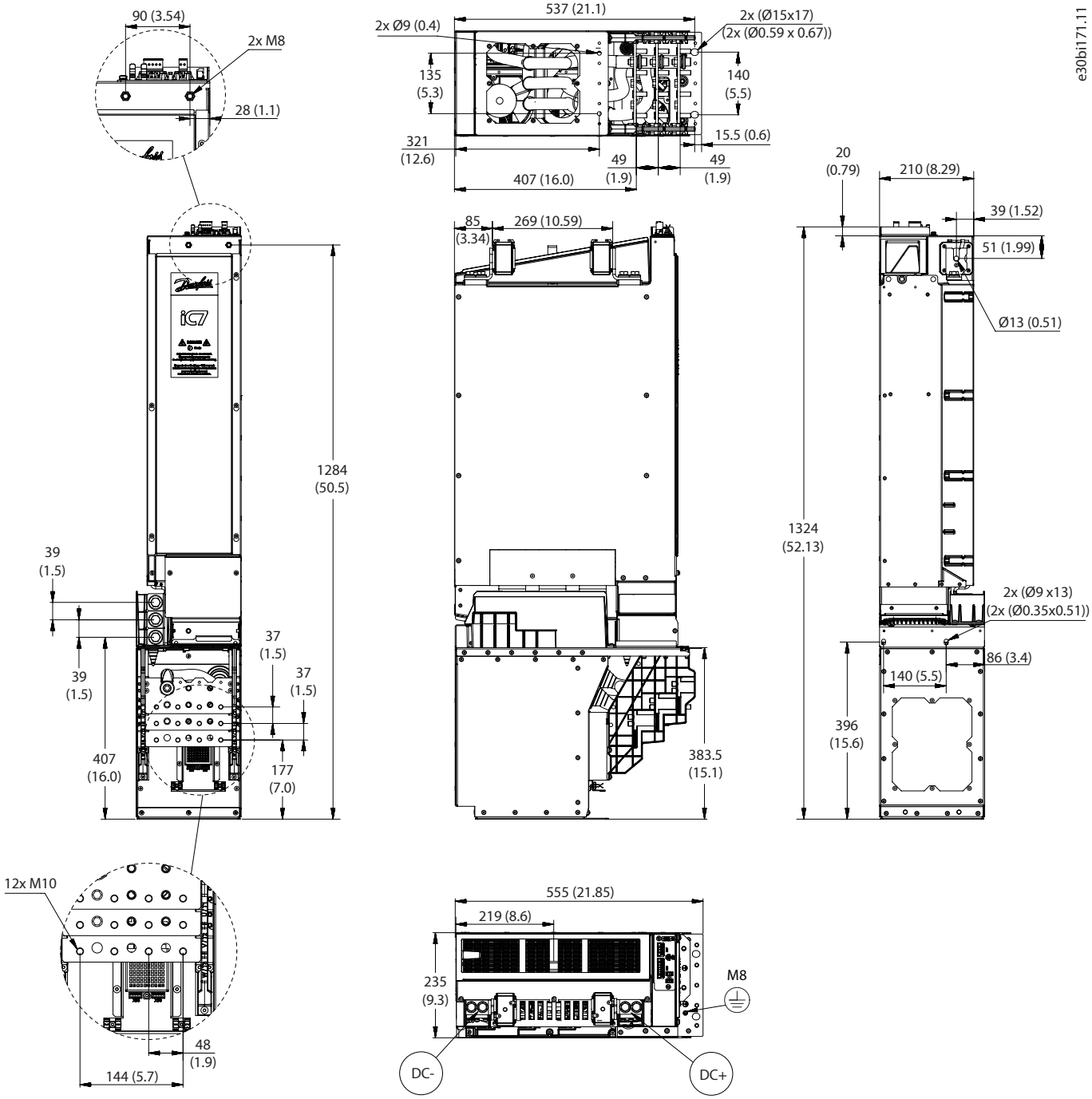

Figure 108: Dimensions of the Inverter Module in mm (in), IR11 with Short Integration Unit (+AE01)

Danfoss Drives Oy © 2026.09

10.2.21 Dimensions of the Short Integration Unit for AFE Module (+AE01)

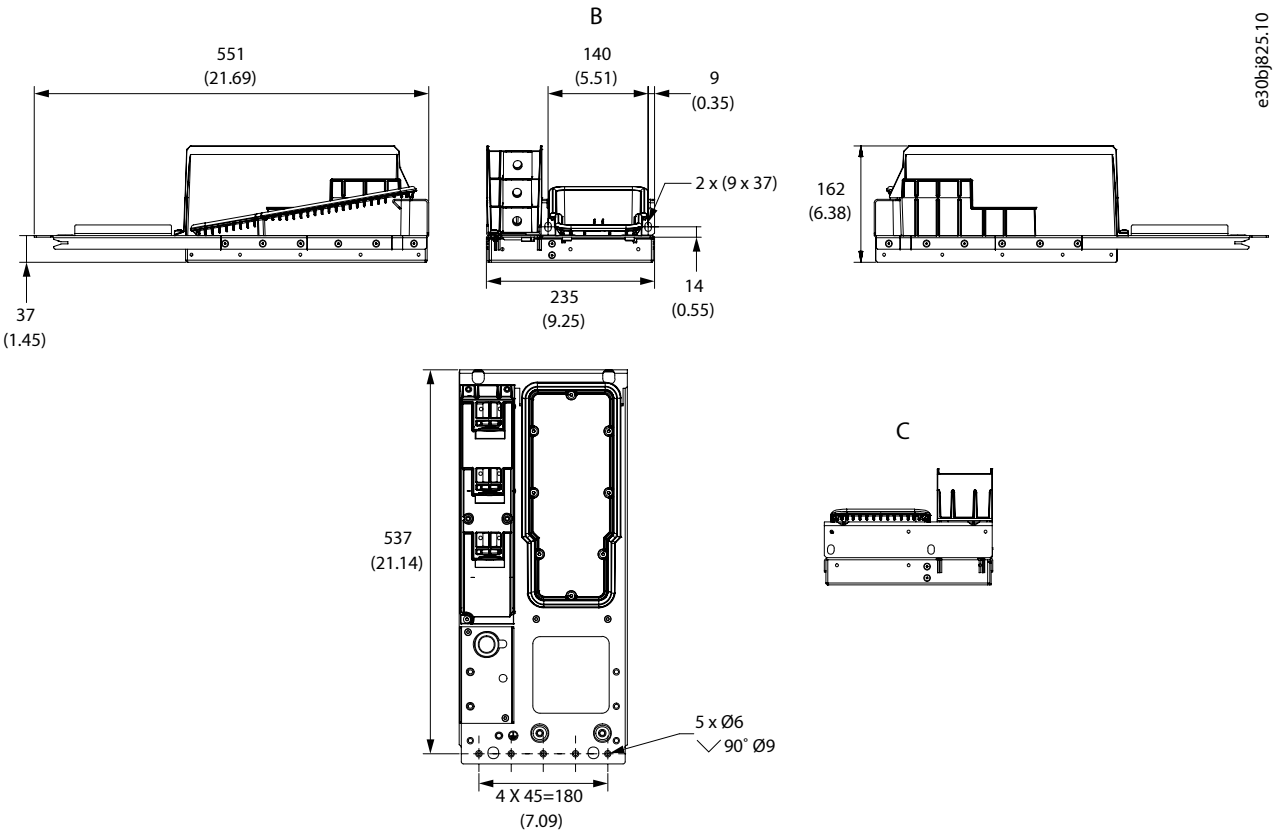

Figure 109: Dimensions of the Short Integration Unit for AFE Module (+AE01) in mm (in)

B	Front	C	Back

10.2.22 Dimensions of the Standard Integration Unit for AFE Module (+AE10)

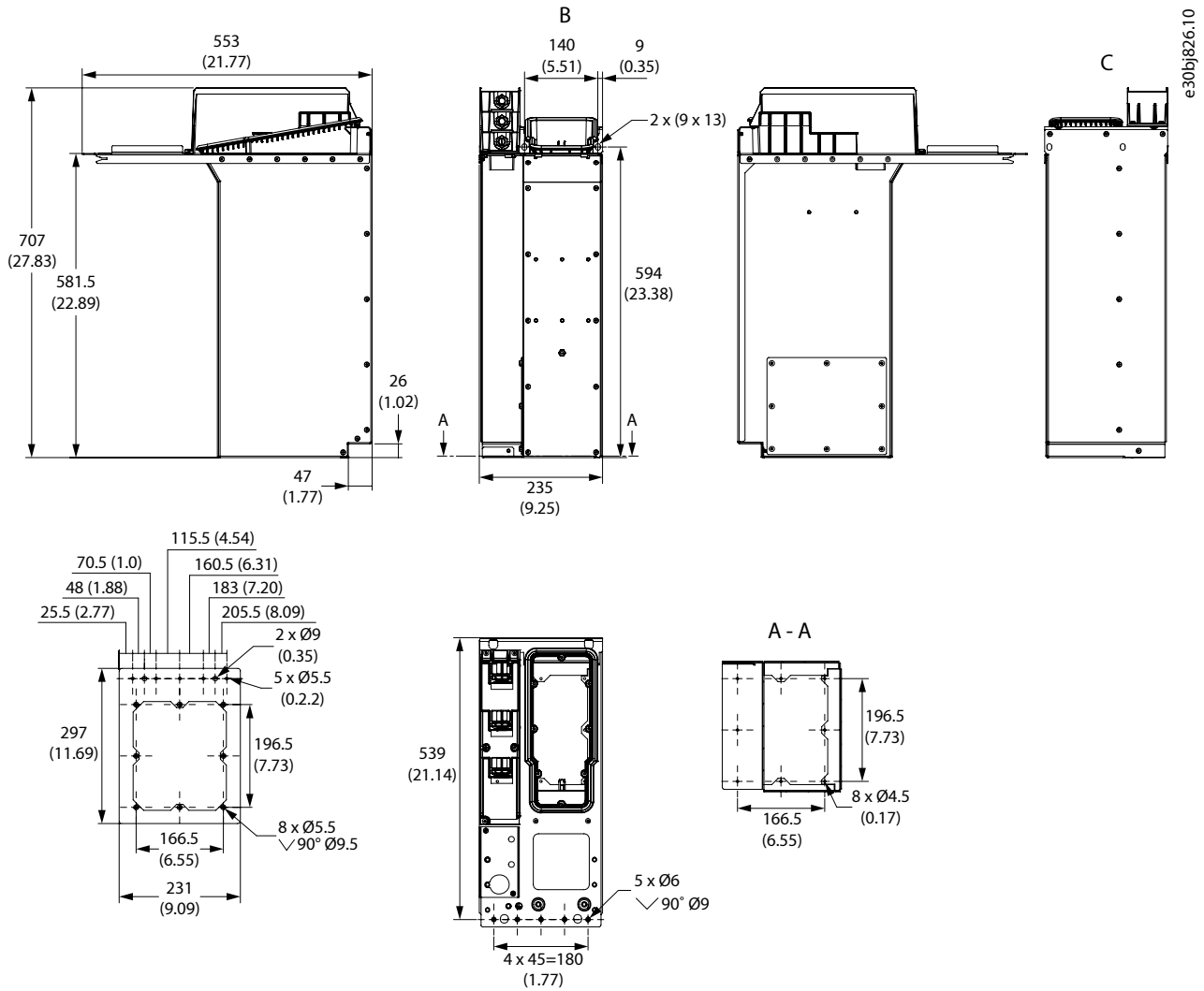

Figure 110: Dimensions of the Standard Integration Unit for AFE Module (+AE10) in mm (in)

B	Front	C	Back

Danfoss Drives Oy © 2026.09

10.2.23 Dimensions of the Short Integration Unit for Inverter Module (+AE01)

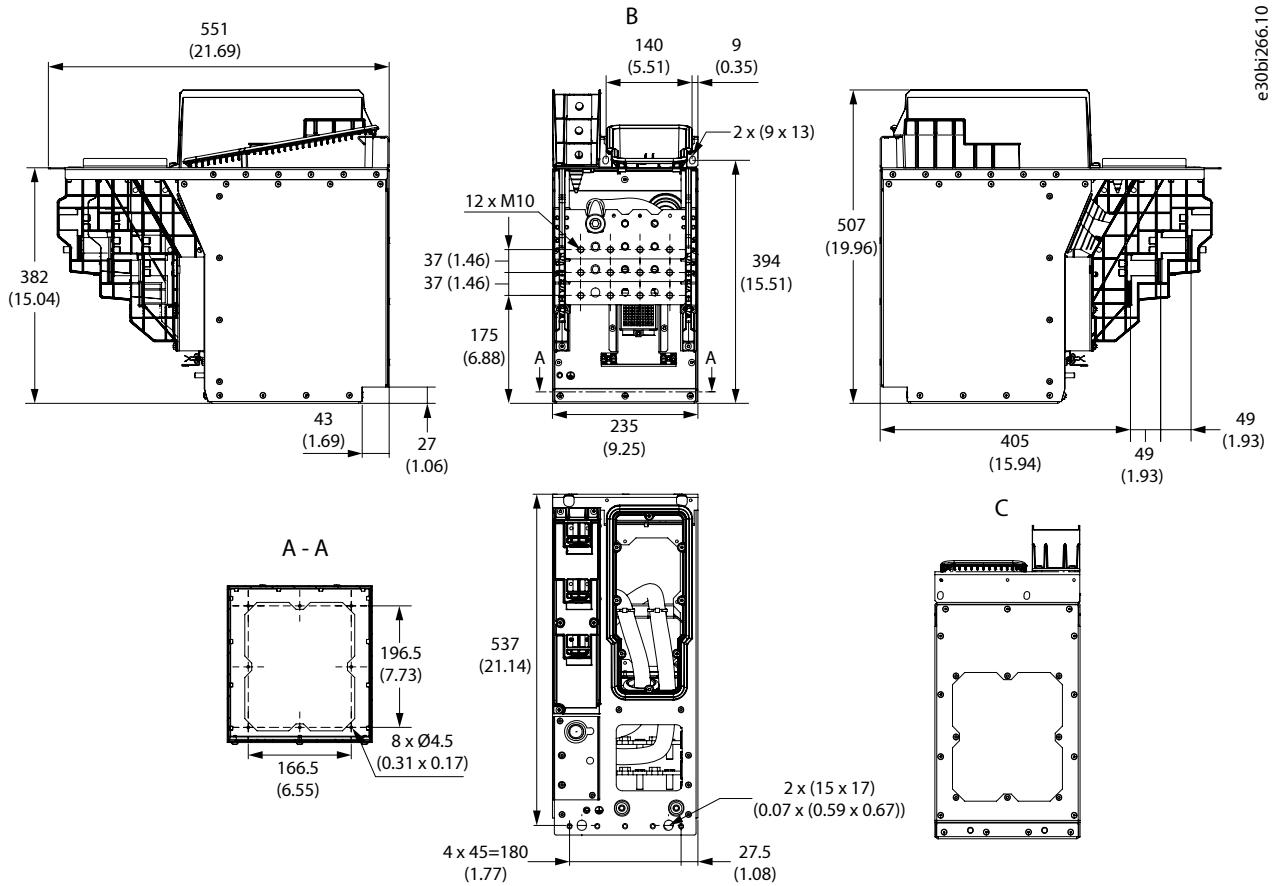

Figure 111: Dimensions of the Short Integration Unit for Inverter Module (+AE01) in mm (in)

B	Front	C	Back

10.2.24 Dimensions of the Standard Integration Unit for Inverter Module (+AE10)

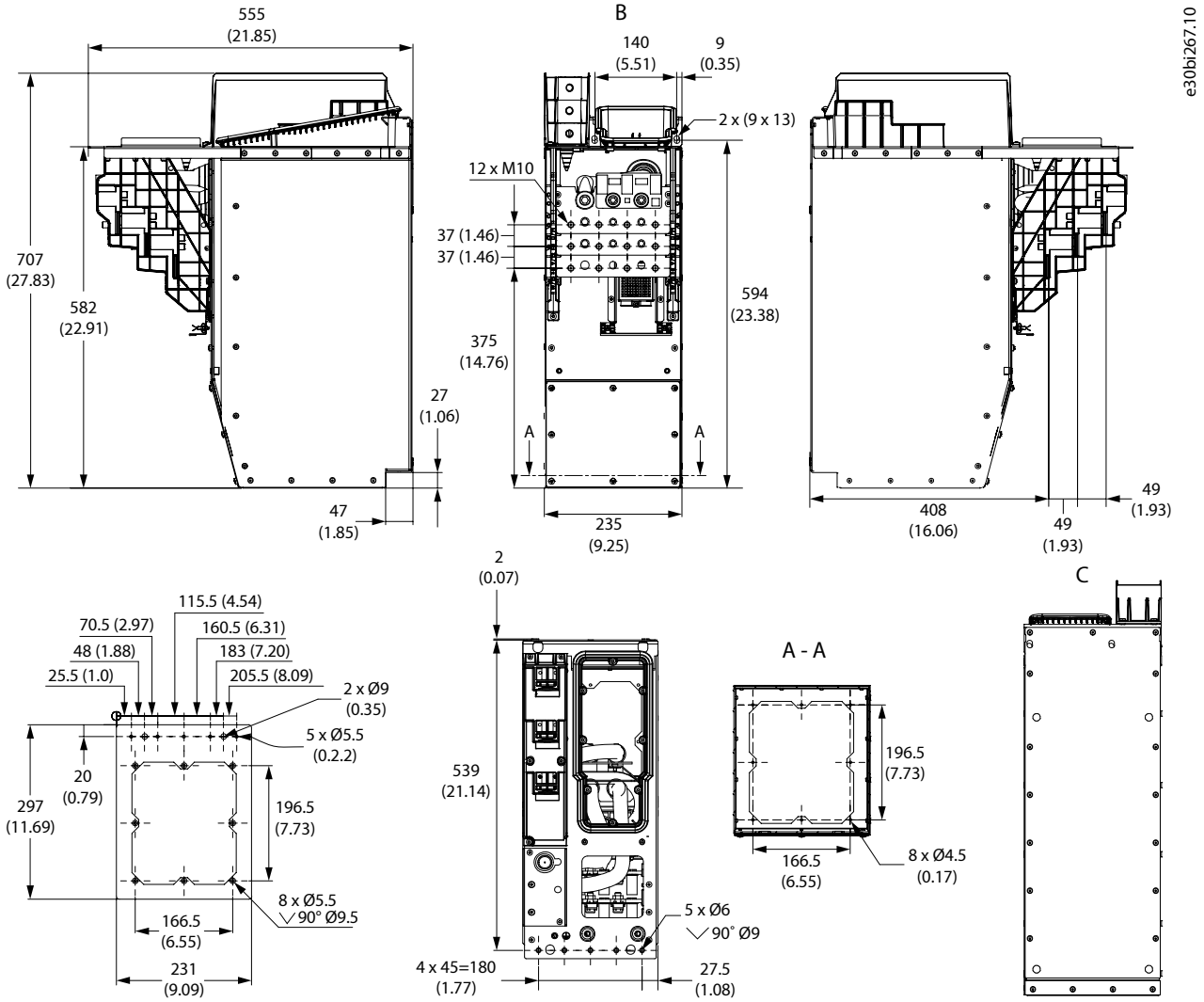

Figure 112: Dimensions of the Standard Integration Unit for Inverter Module (+AE10) in mm (in)

B	Front	C	Back

Danfoss Drives Oy © 2026.09

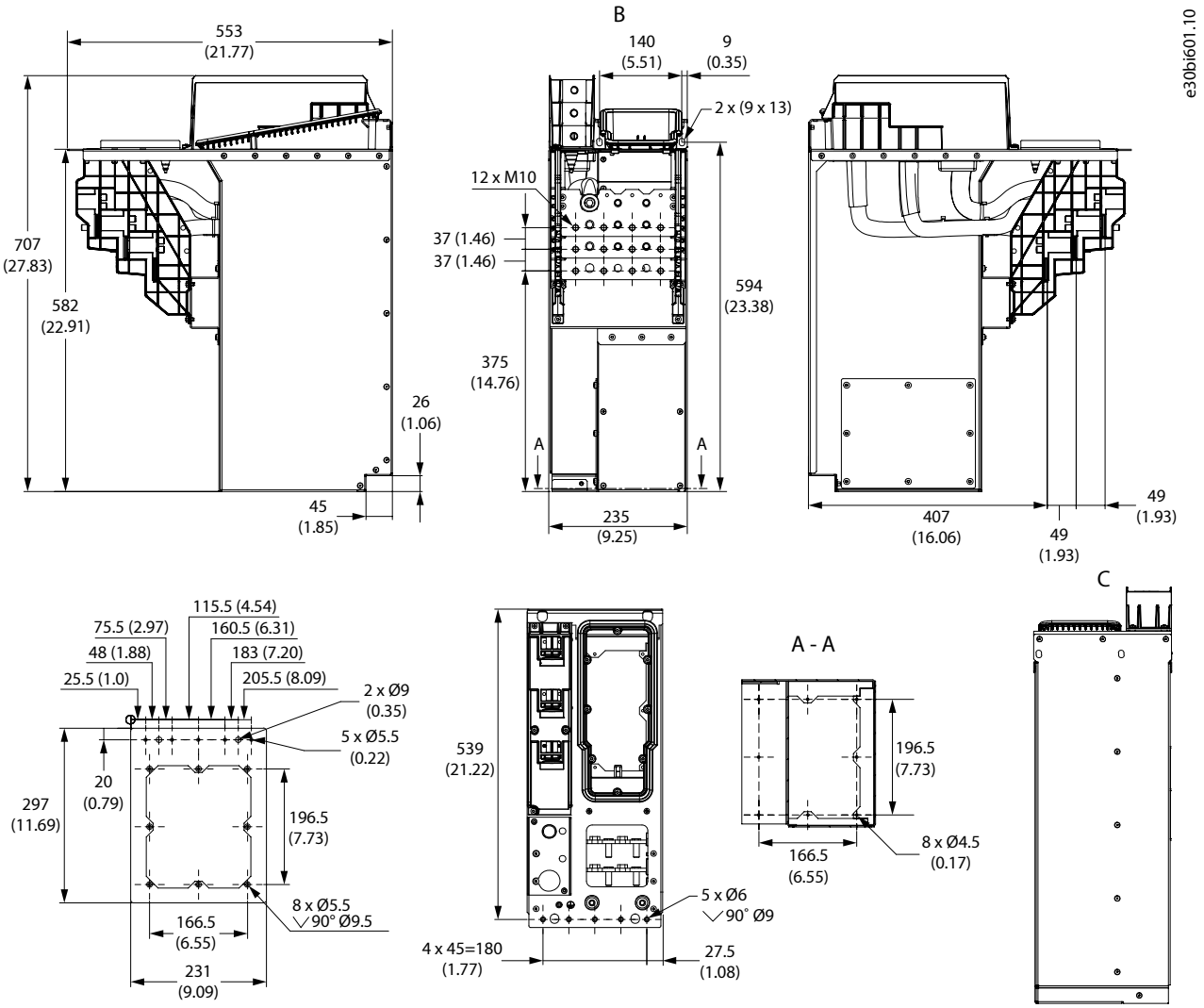

Figure 113: Dimensions of the Empty Standard Integration Unit for Inverter Module in mm (in)

B	Front	C	Back

10.2.25 Dimensions for DC Fuses, NR11 with Short Integration Unit

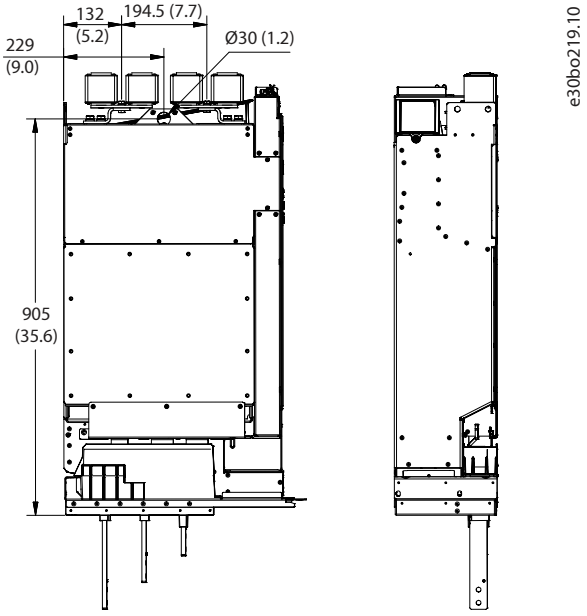

Figure 114: Dimensions for DC Fuses, NR11 with Short Integration Unit, in mm (in)

10.2.26 Dimensions for DC Fuses, NR11 with Standard Integration Unit

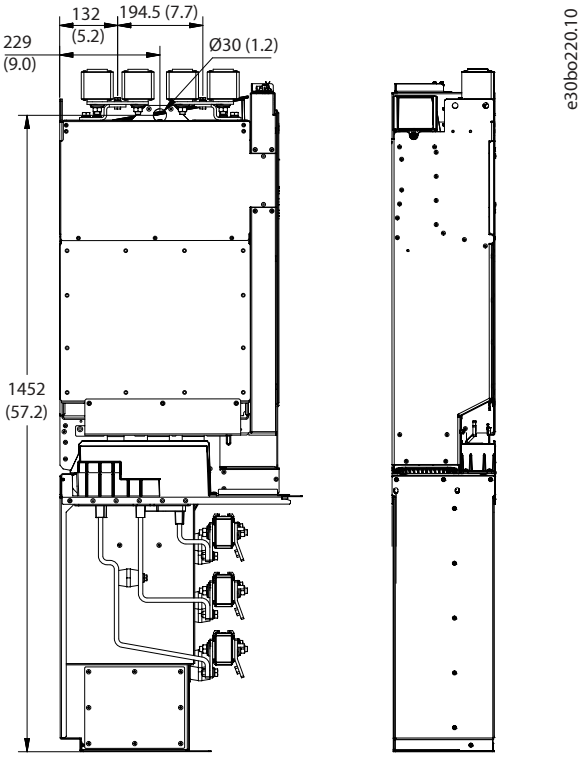

Figure 115: Dimensions for DC Fuses, NR11 with Standard Integration Unit, in mm (in)

Danfoss Drives Oy © 2026.09

10.2.27 Dimensions for DC Fuses, AM10 and IM10

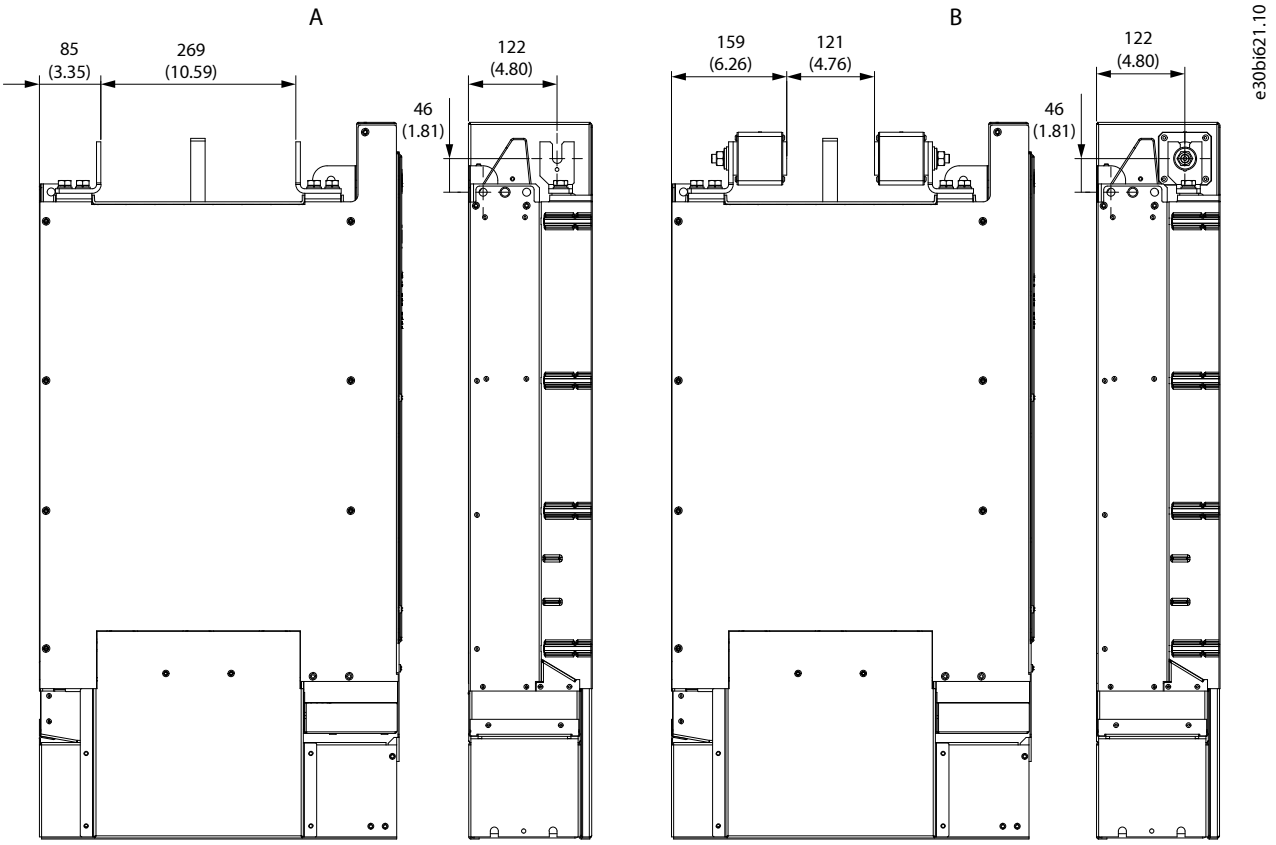

Figure 116: Dimensions for DC Fuses, AM10 and IM10, in mm (in)

A	Dimensions without DC fuses	B	Dimensions with DC fuses

10.2.28 Dimensions for DC Fuses, AM11 and IM11

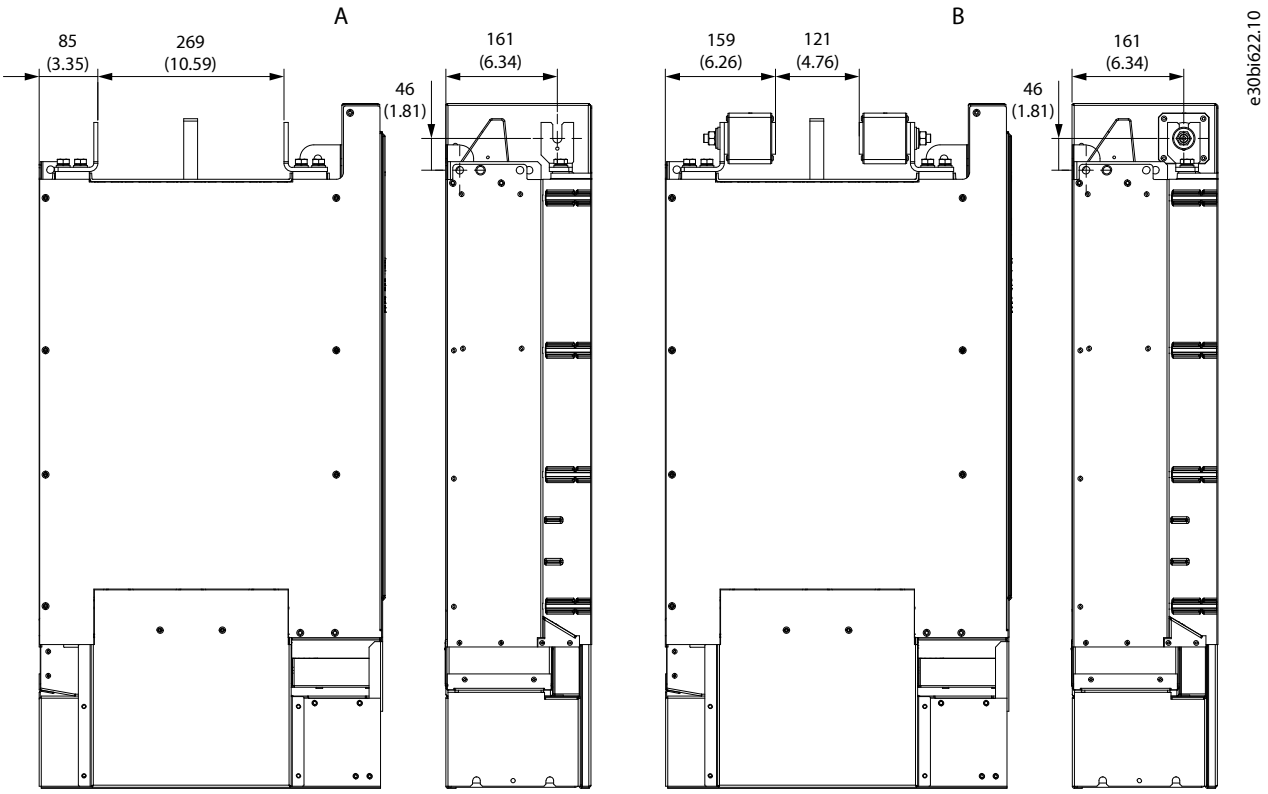

Figure 117: Dimensions for DC Fuses, AM11, IM11, in mm (in)

A	Dimensions without DC fuses	B	Dimensions with DC fuses

Danfoss Drives Oy © 2026.09

10.2.29 Dimensions for DC Fuses, AR10 and IR10

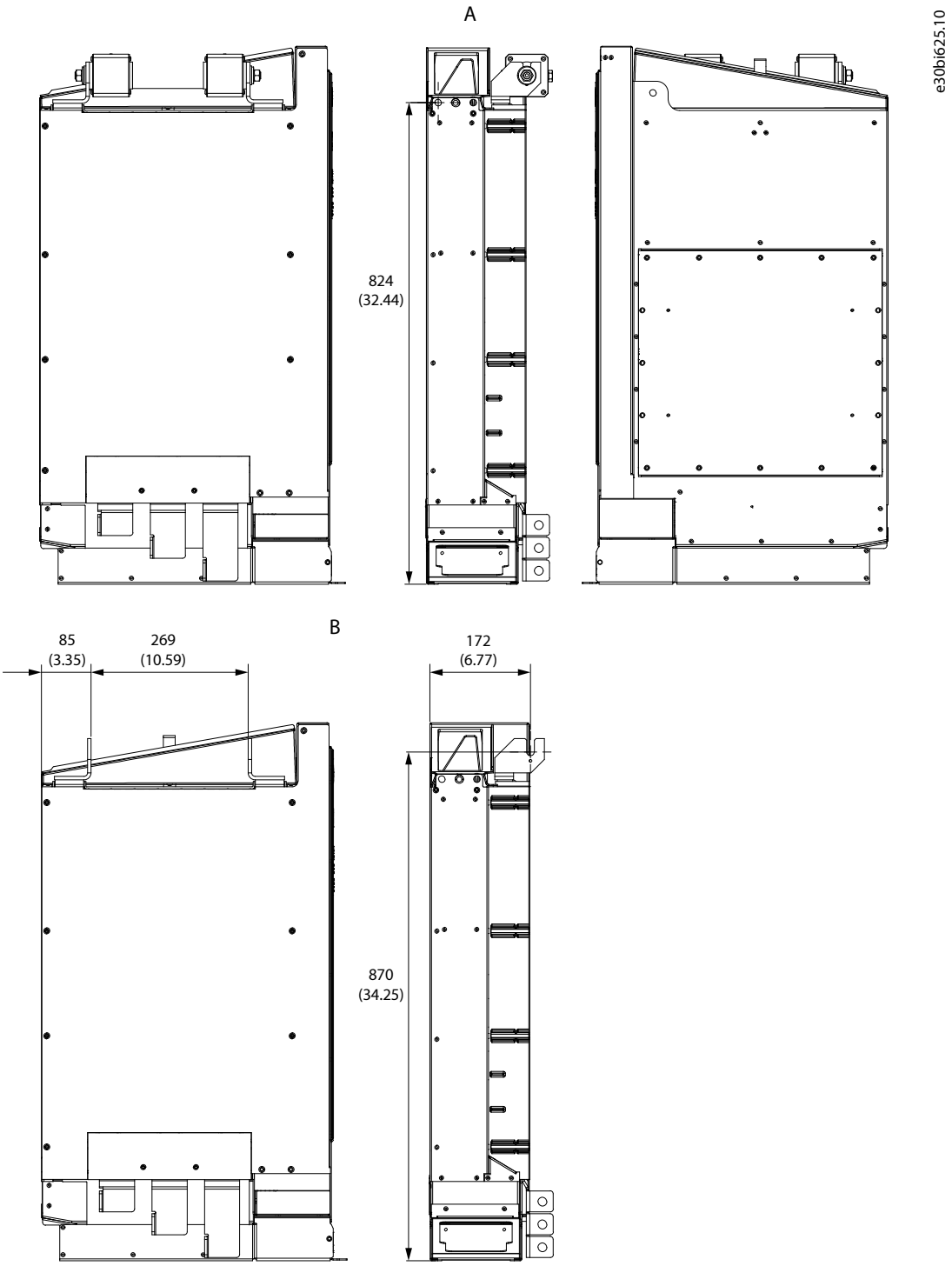

Figure 118: Dimensions for DC Fuses, AR10 and IR10, in mm (in)

A	Dimensions with DC fuses	B	Dimensions without DC fuses

10.2.30 Dimensions for DC Fuses, AR11 and IR11

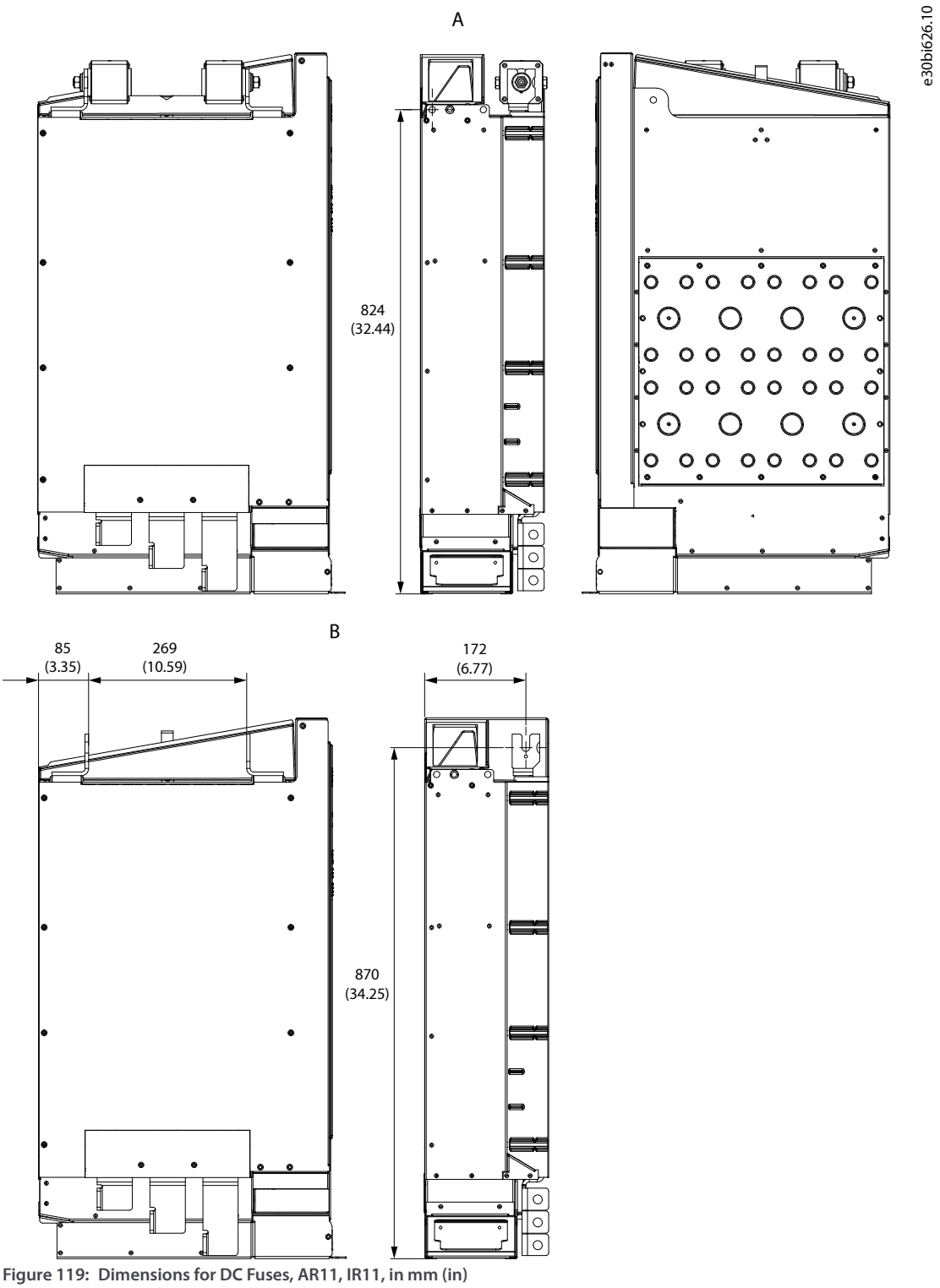

Figure 119: Dimensions for DC Fuses, AR11, IR11, in mm (in)

A	Dimensions with DC fuses	B	Dimensions without DC fuses

Danfoss Drives Oy © 2026.09

10.2.31 Dimensions of the Control Unit

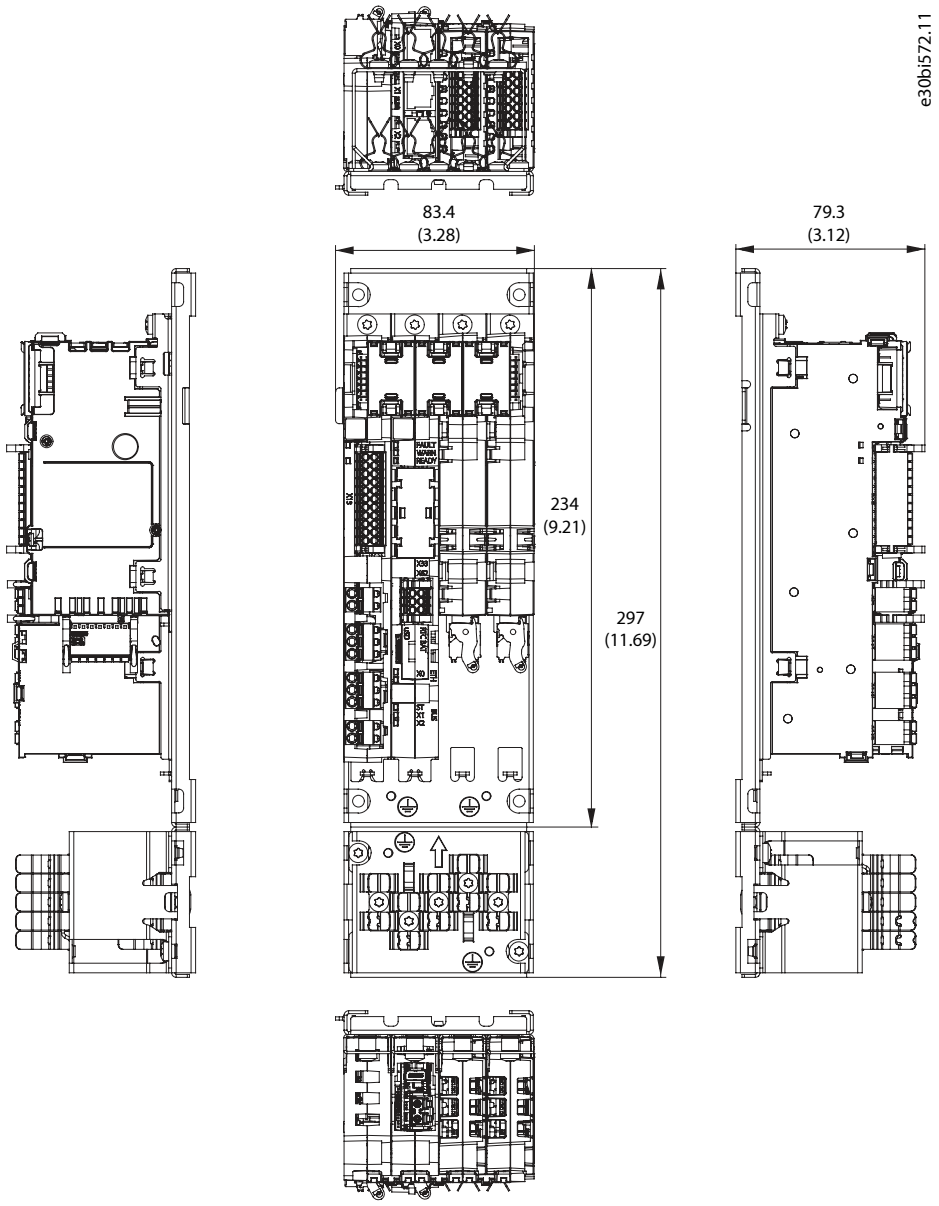

Figure 120: Dimensions of the Control Unit in mm (in), Example Configuration

10.2.32 Dimensions of the Control Unit Mounting Plate

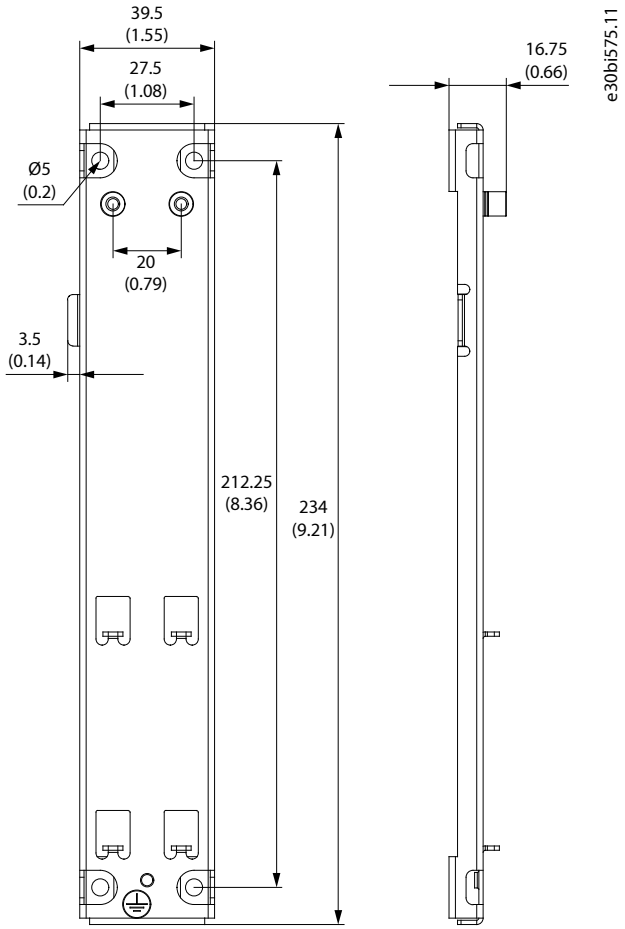

Figure 121: Dimensions of the Modular Control Unit Mounting Plate in mm (in), 2 Places

Danfoss Drives Oy © 2026.09

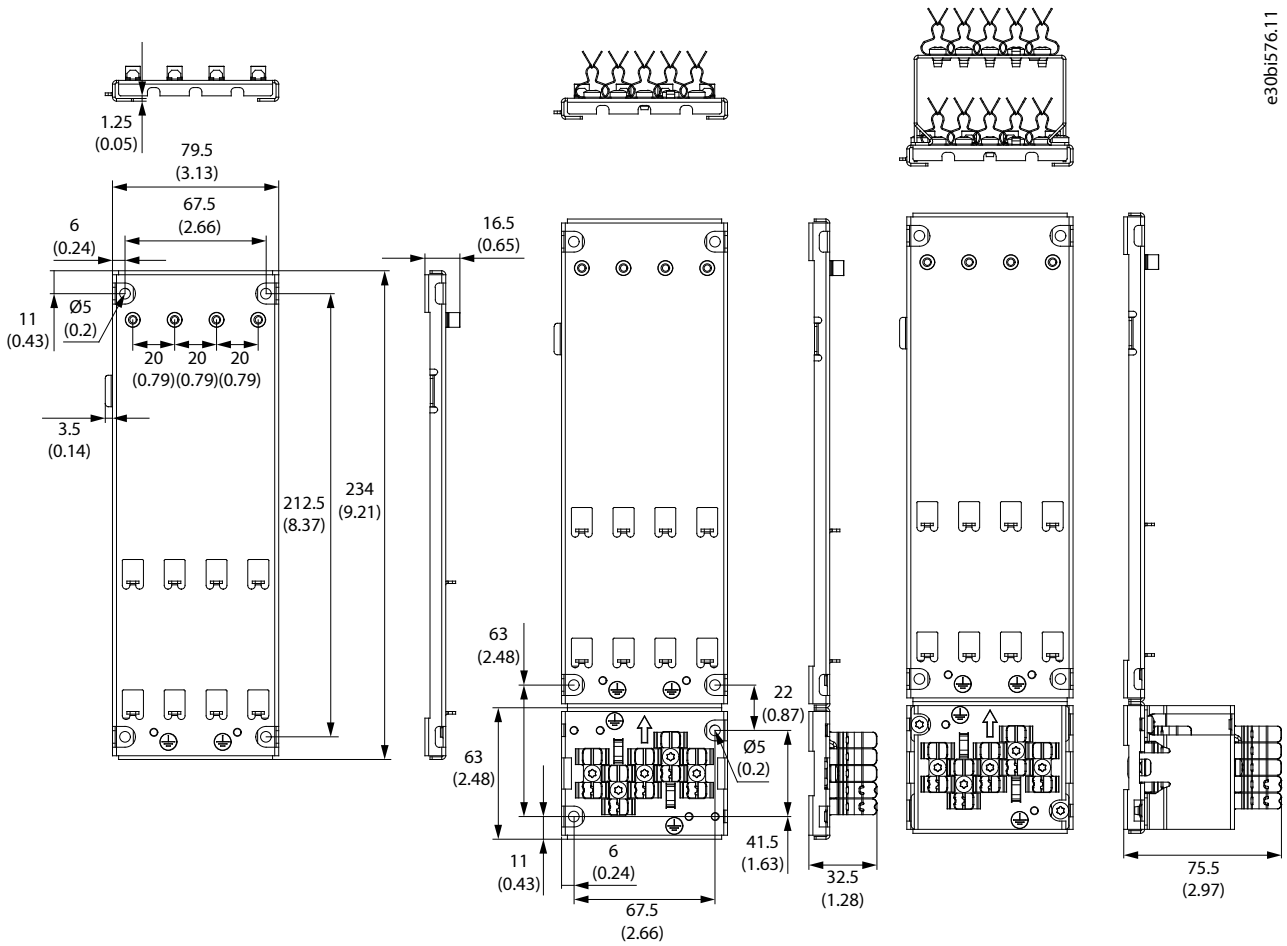

Figure 122: Dimensions of the Modular Control Unit Mounting Plate in mm (in), 4 Places

10.2.33 Dimensions of the Option Connector

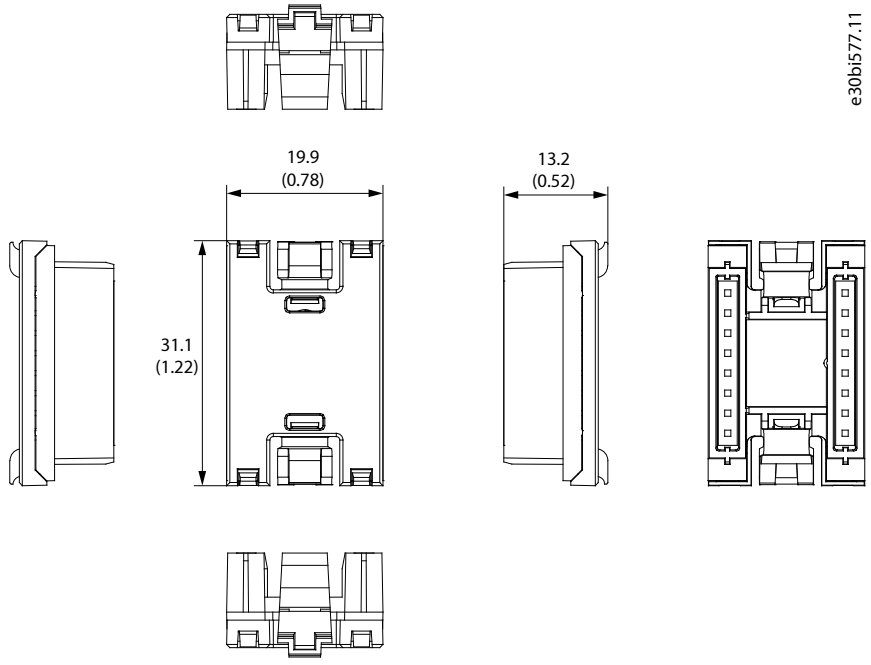

Figure 123: Dimensions of the Option Connector in mm (in)

10.2.34 Dimensions of the Control Board

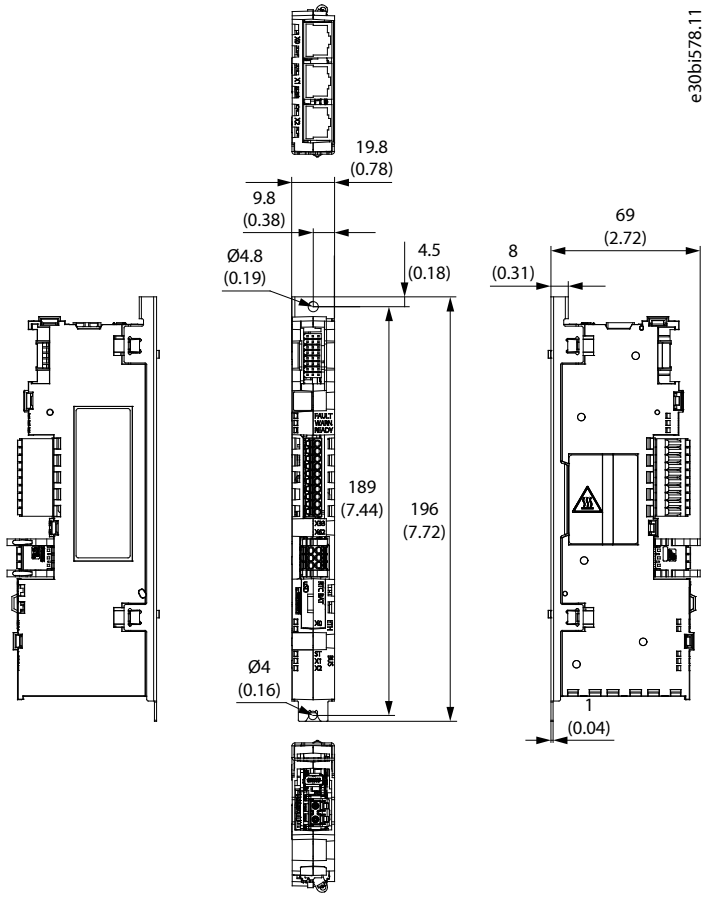

Figure 124: Dimensions of the Control Board in mm (in)

Danfoss Drives Oy © 2026.09

10.2.35 Dimensions of the I/O and Relay Option

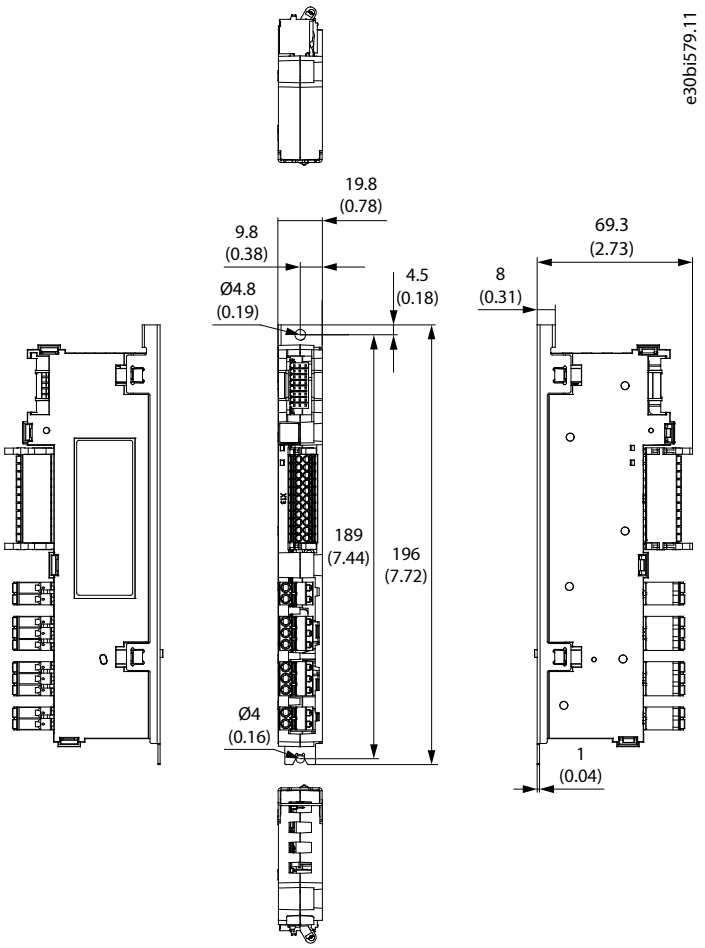

Figure 125: Dimensions of the I/O and Relay Option in mm (in)

10.2.36 Dimensions of an Option Board

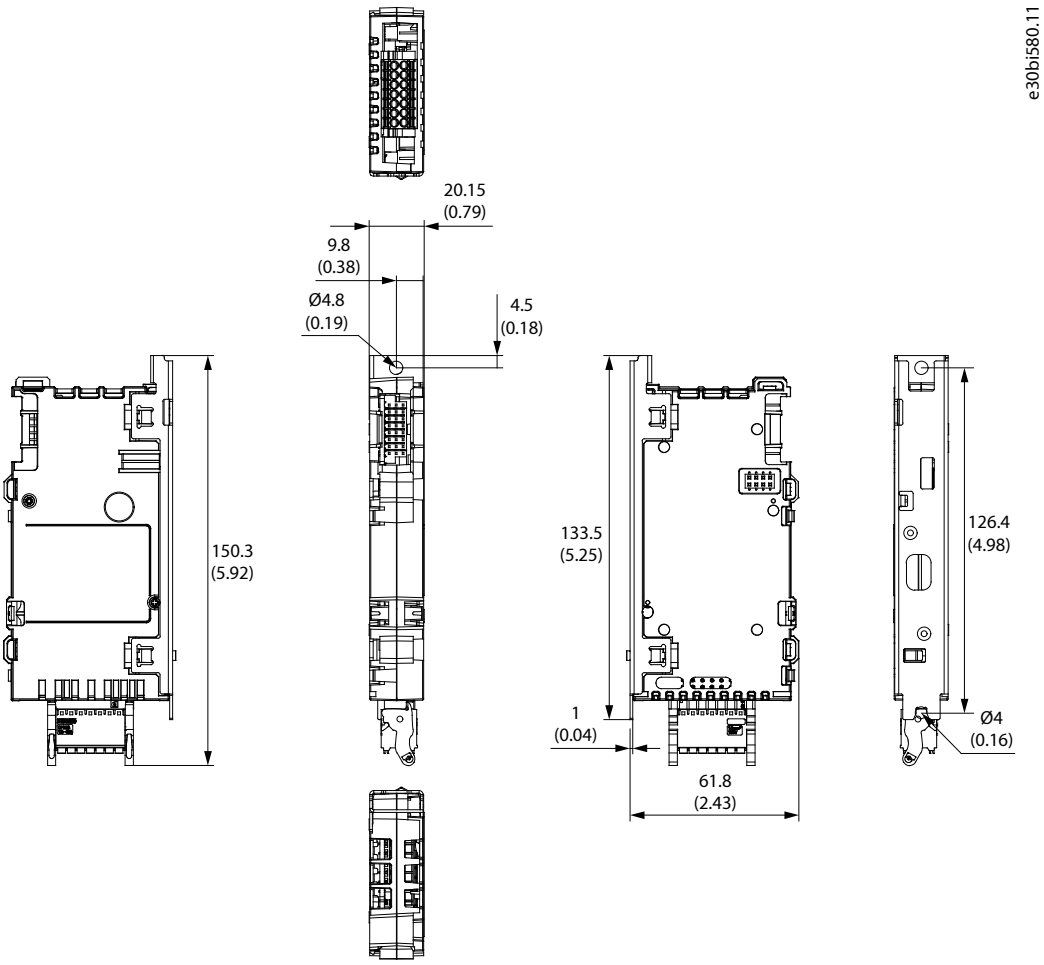

Figure 126: Dimensions of an Option Board in mm (in)

Danfoss Drives Oy © 2026.09

10.2.37 Dimensions of the 4-port Star Coupler Board

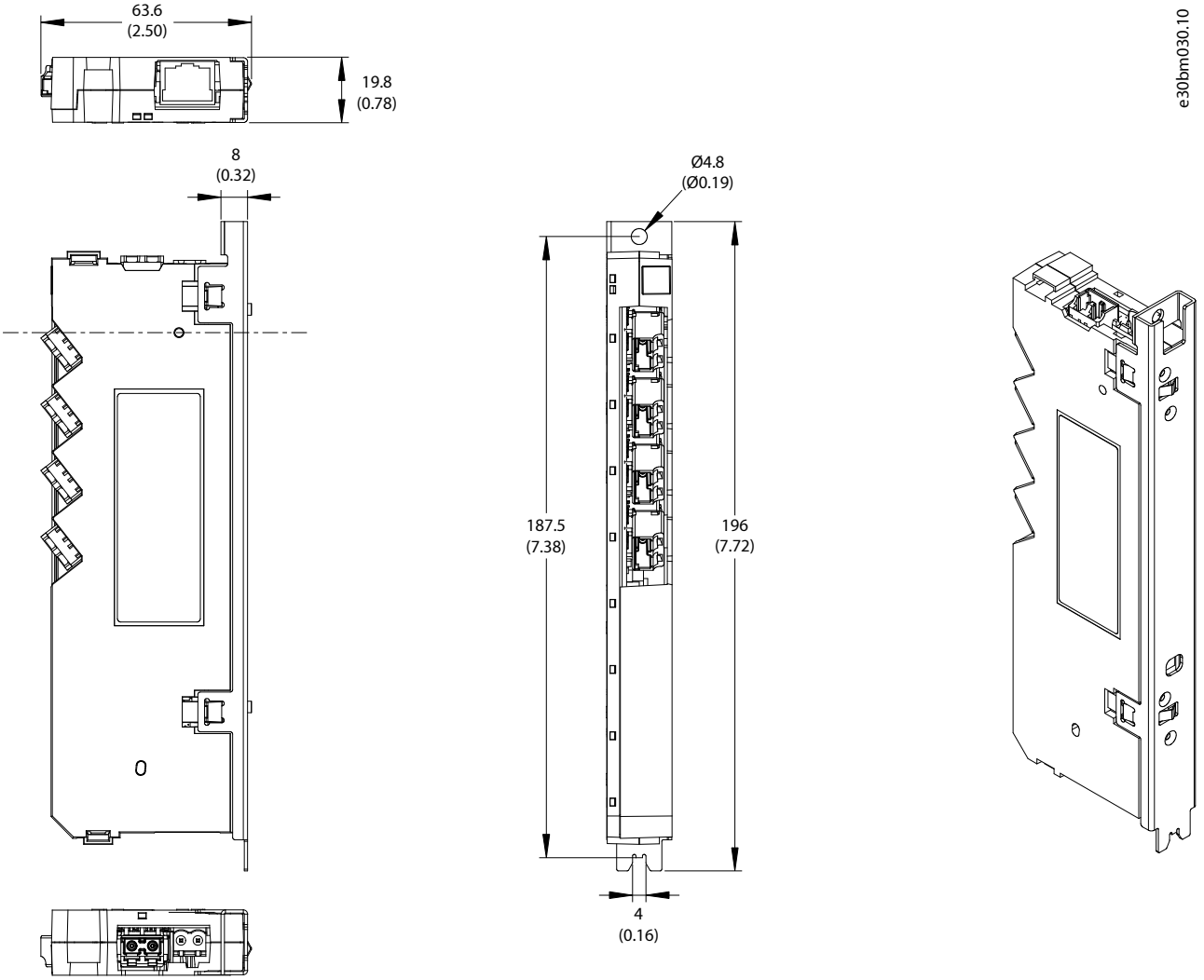

Figure 127: Dimensions of the 4-port Star Coupler Board in mm (in)

10.2.38 Dimensions of the 8-port Star Coupler Board

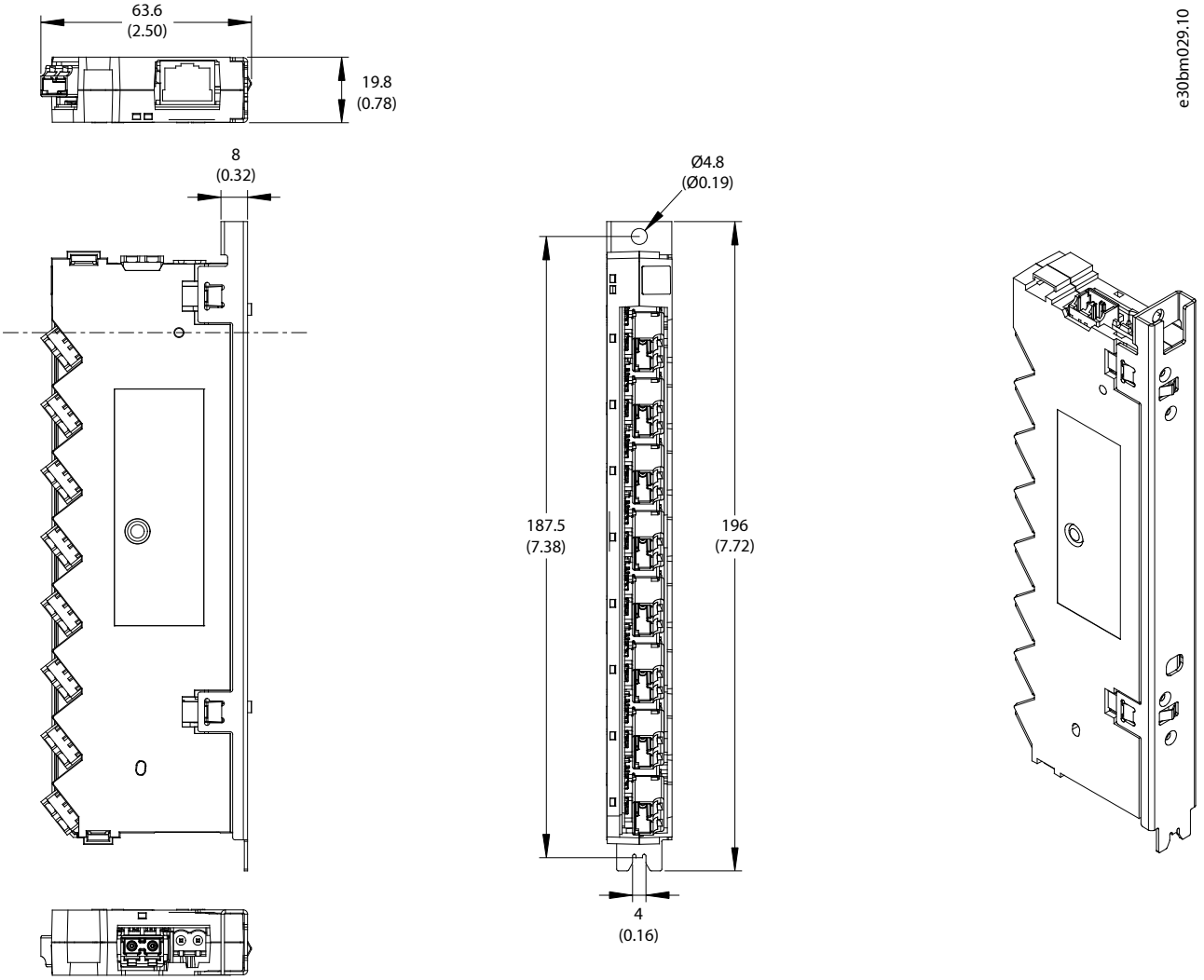

Figure 128: Dimensions of the 8-port Star Coupler Board in mm (in)

Danfoss Drives Oy © 2026.09

10.2.39 Dimensions of the 16-port Star Coupler Board

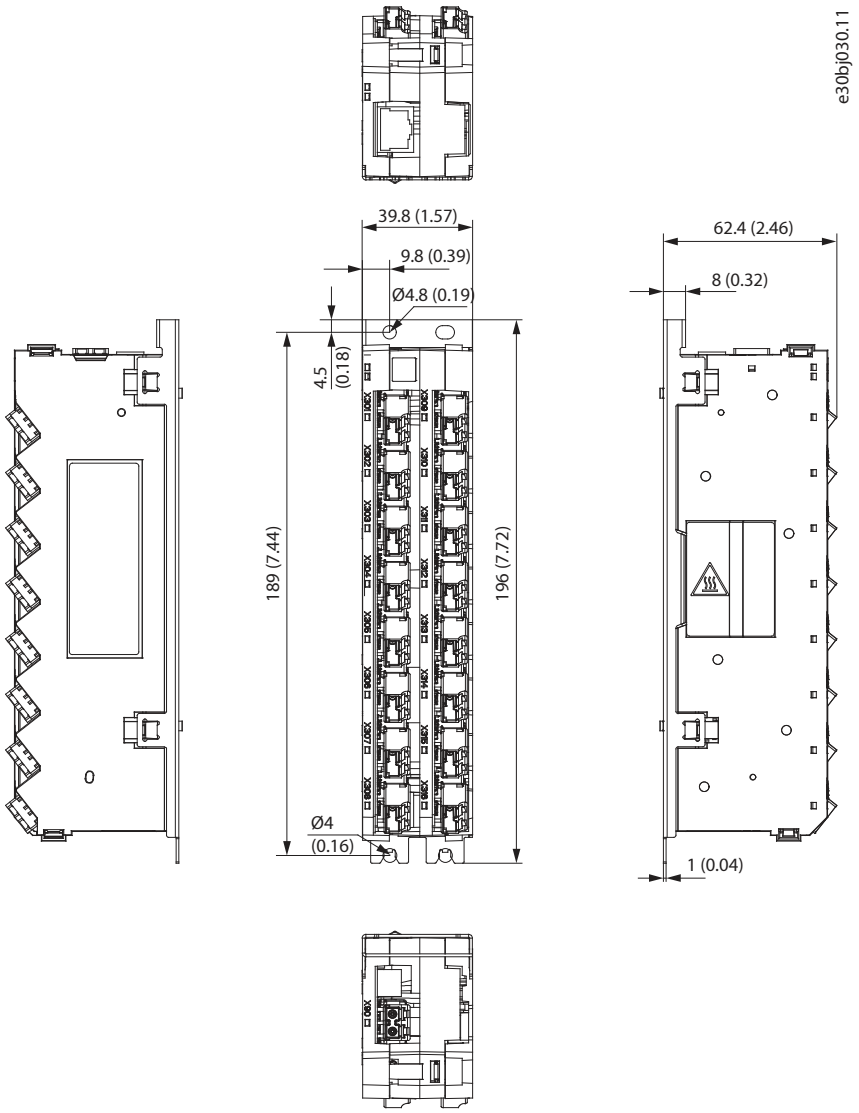

Figure 129: Dimensions of the 16-port Star Coupler Board in mm (in)

10.2.40 Dimensions of the Pre-charging Unit, IEC

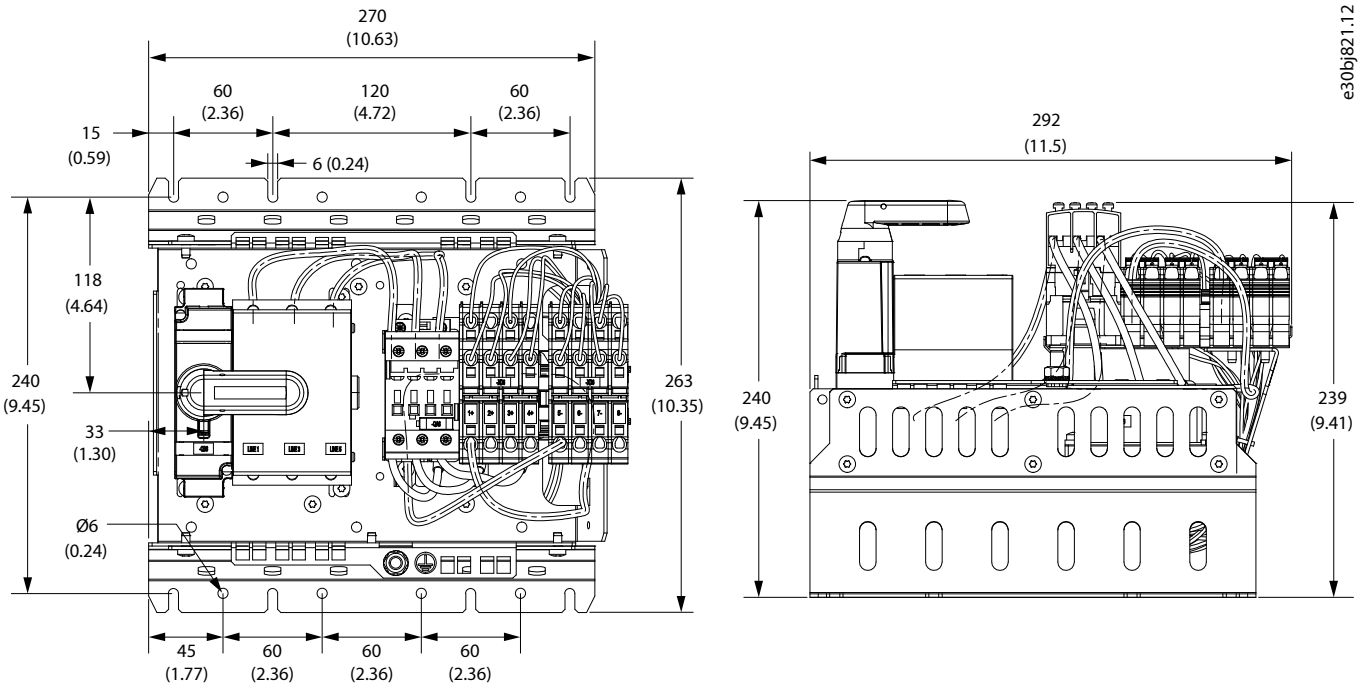

Figure 130: Dimensions of the Pre-charging Unit in mm (in), IEC

Danfoss Drives Oy © 2026.09

10.2.41 Dimensions of the Pre-charging Unit, UL

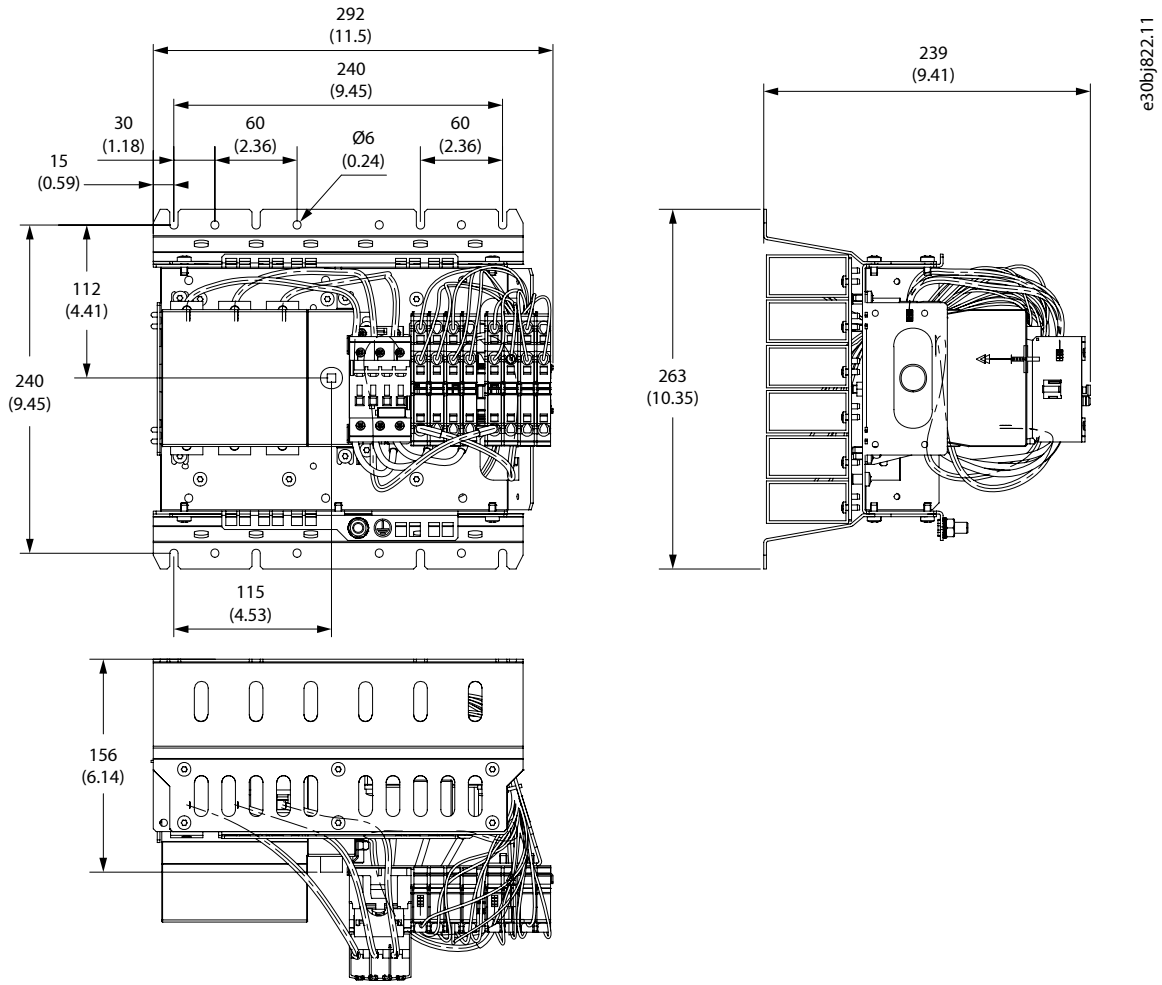

Figure 131: Dimensions of the Pre-charging Unit in mm (in), UL

10.3 Wiring Diagrams

10.3.1 Wiring Diagram, NFE Modules

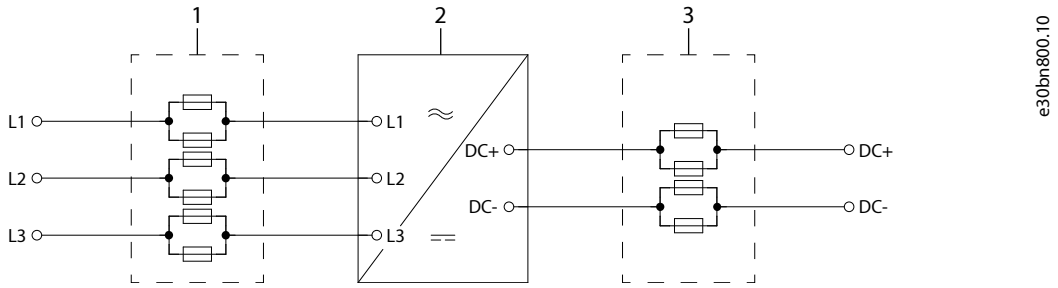

Figure 132: Wiring Diagram, NFE Modules

1	AC fuses (+AJFX)	2	NFE module
3	DC fuses (+AKFX)		

10.3.2 Wiring Diagram, NFE Modules with Parallel Power Units

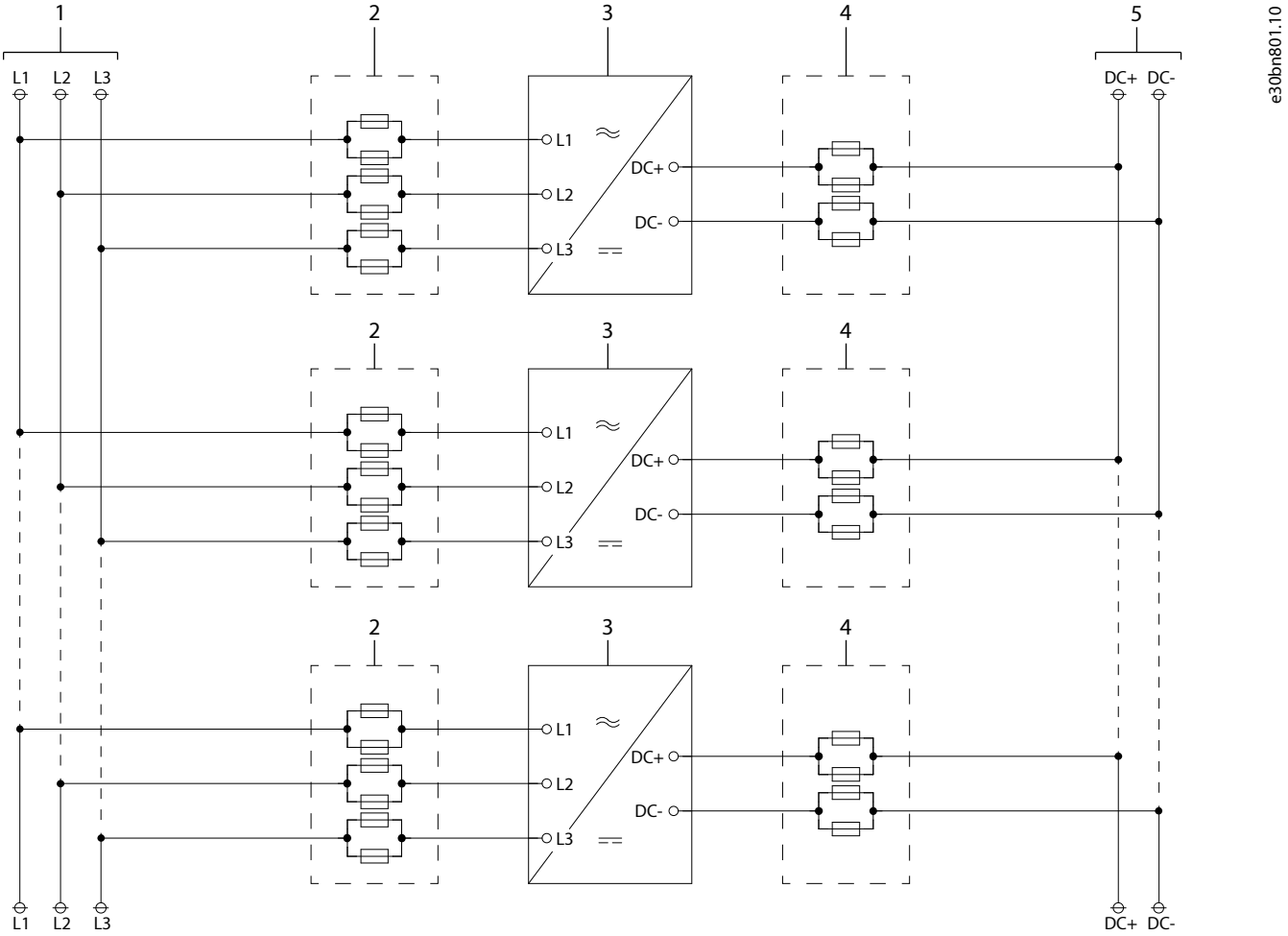

Figure 133: Wiring Diagram, NFE Modules with Parallel Power Units

1	Common AC bus	2	AC fuses (+AJFX)
3	NFE modules	4	DC fuses (+AKFX)
5	Common DC bus		

Danfoss Drives Oy © 2026.09

10.3.3 Wiring Diagram, AFE Modules

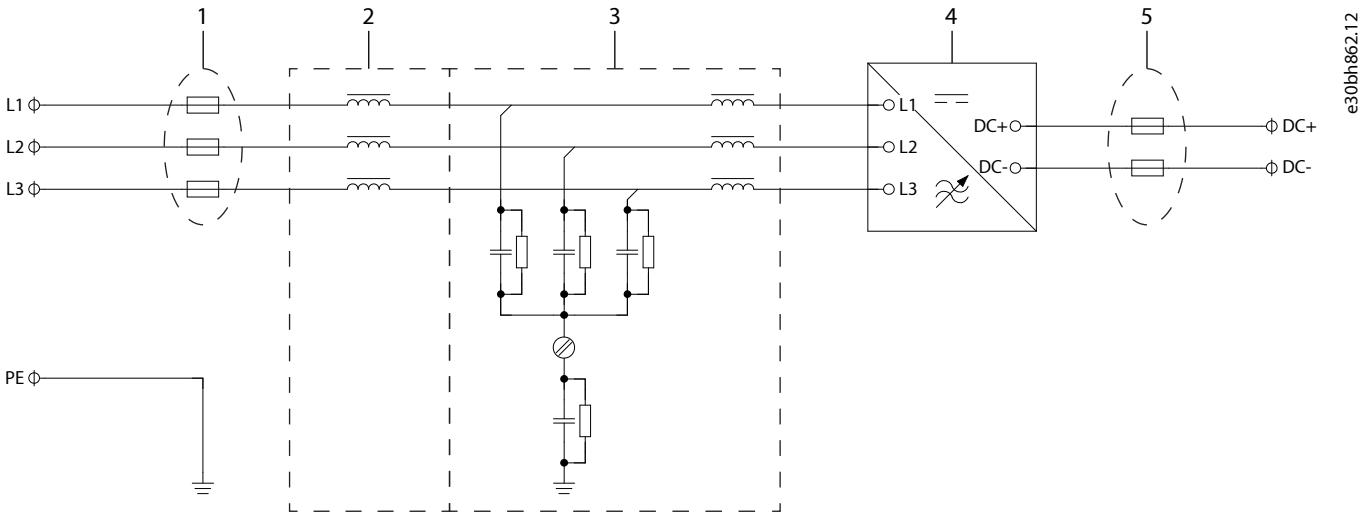

Figure 134: Wiring Diagram, AFE Modules

1	AC fuses	2	L filter (only included in LCL filter)
3	LC filter	4	AFE module
5	DC fuses		

10.3.4 Wiring Diagram, AFE Modules and LC Filter

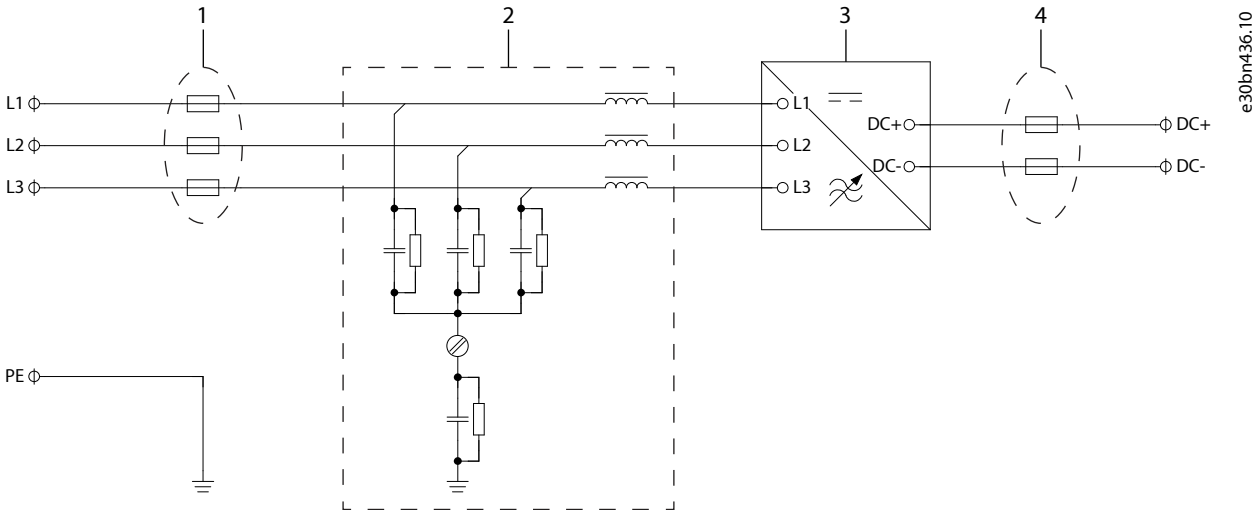

Figure 135: Wiring Diagram, AFE Modules and LC Filter

1	AC fuses	2	LC filter
3	AFE module	4	DC fuses

10.3.5 Wiring Diagram, AFE Modules, LC Filter, and Transformer

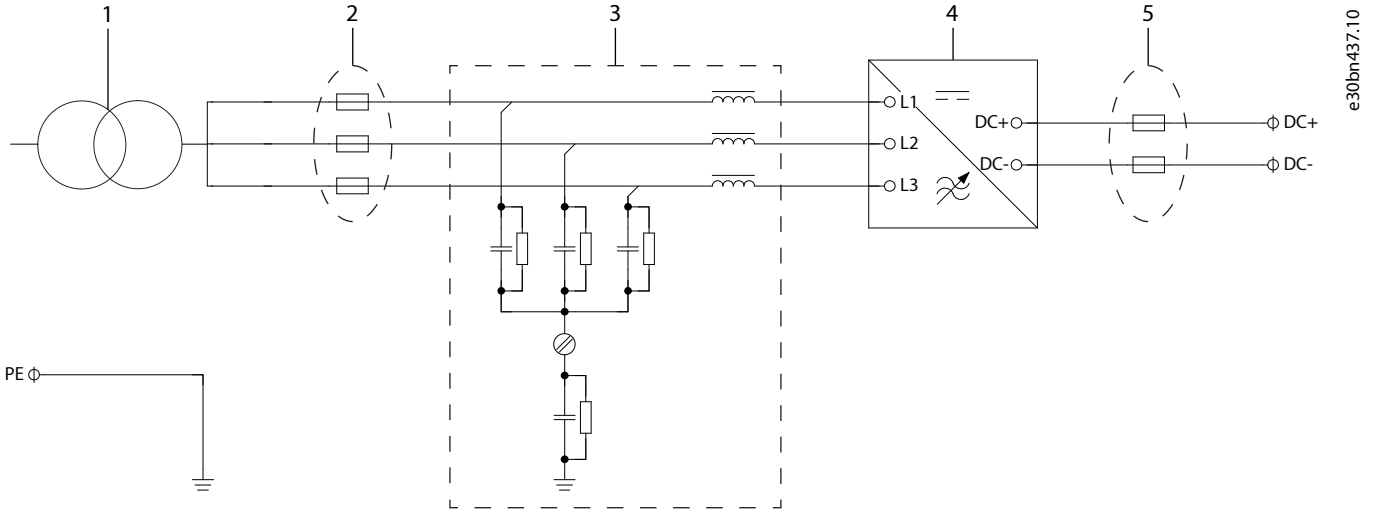

Figure 136: Wiring Diagram for AFE Modules, LC Filter, and Transformer

1	Transformer	2	AC fuses
3	LC filter	4	AFE module
5	DC fuses		

Danfoss Drives Oy © 2026.09

10.3.6 Wiring Diagram, AFE Modules with Parallel Power Units

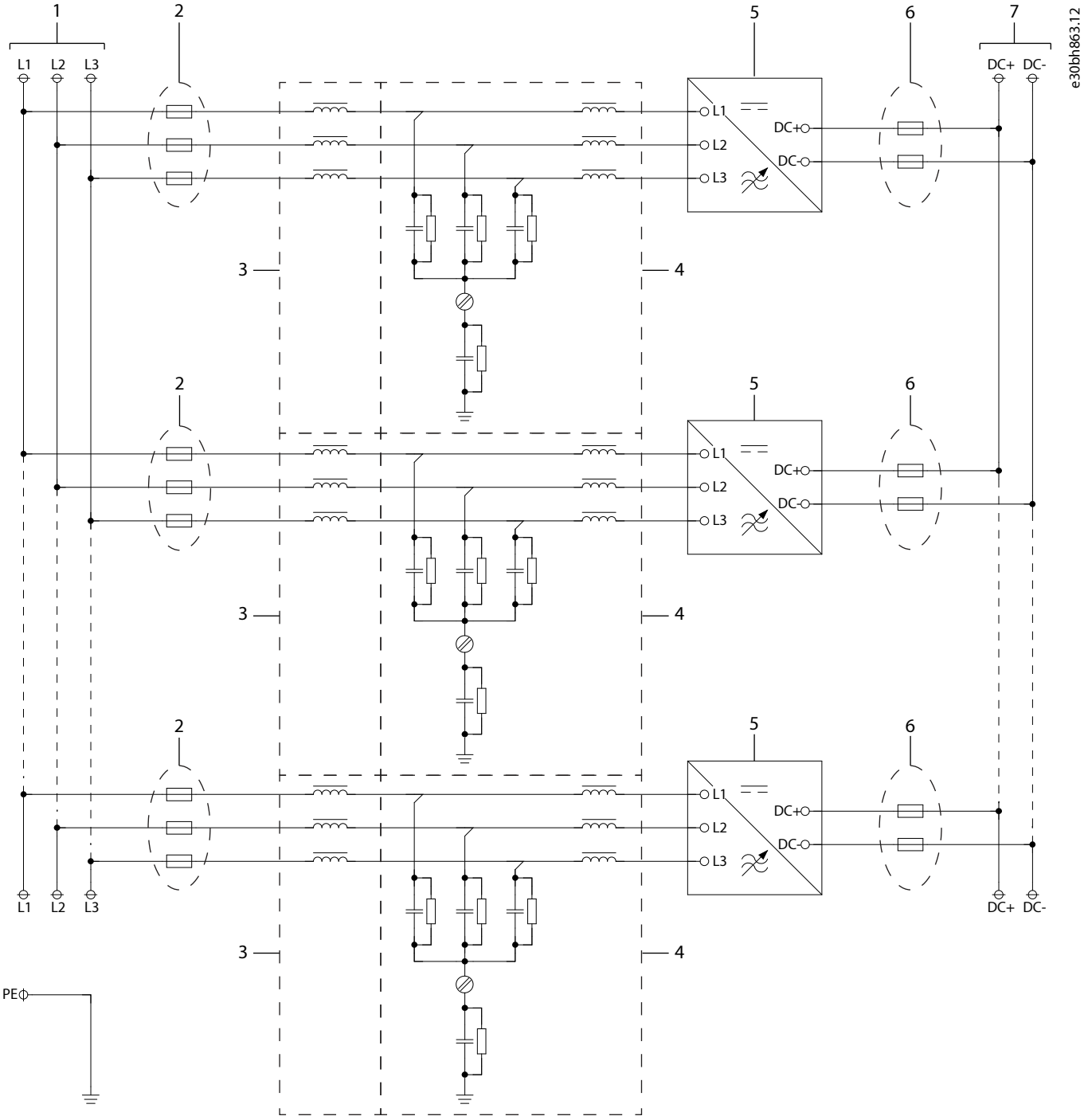

Figure 137: Wiring Diagram, AFE Modules with Parallel Power Units

1	Common AC bus	2	AC fuses
3	L filter (only included in LCL filter)	4	LC filter
5	AFE modules	6	DC fuses
7	Common DC bus		

10.3.7 Wiring Diagram, AFE Modules with Parallel Power Units, LC Filters, and Transformers

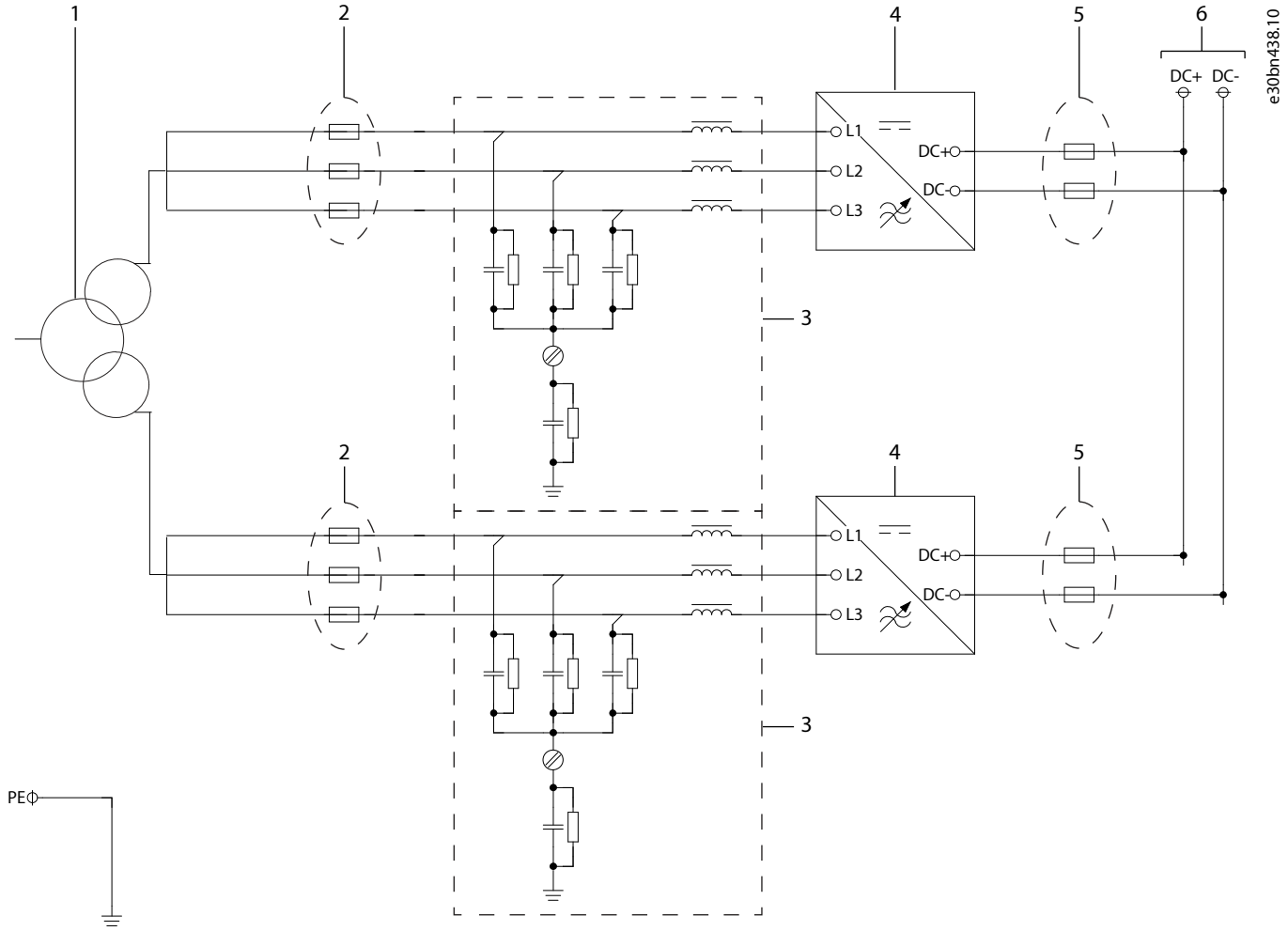

Figure 138: Wiring Diagram for AFE Modules with Parallel Power Units, LC Filters, and Transformers

1	Transformer	2	AC fuses
3	LC filter	4	AFE modules
5	DC fuses	6	Common DC bus

10.3.8 Wiring Diagram, Inverter Modules

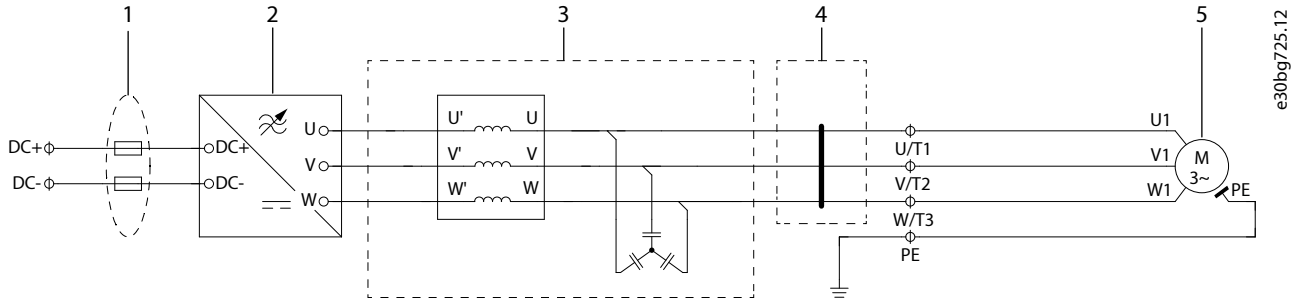

Figure 139: Wiring Diagram, Inverter and dU/dt Filter

Danfoss Drives Oy © 2026.09

1	DC fuses	2	Inverter module
3	dU/dt Filter	4	Common-mode Filter
5	Motor		

10.3.9 Wiring Diagram, Inverter Modules with Parallel Power Units

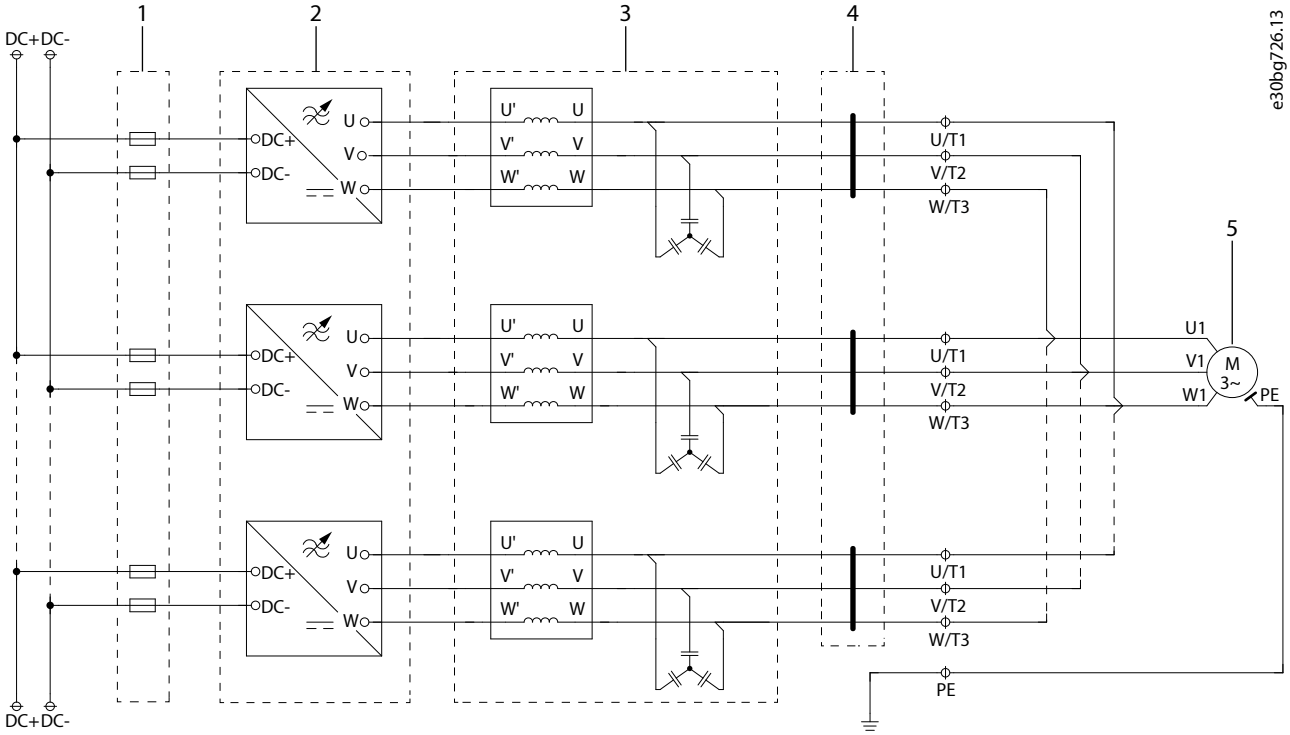

Figure 140: Wiring Diagram, Inverter and dU/dt Filter with Parallel Power Units, with a Common DC Bus

1	DC fuses	2	Inverter modules
3	dU/dt Filters	4	Common-mode Filters
5	Motor		

10.3.10 Pre-charging Wiring Diagram, AFE Modules

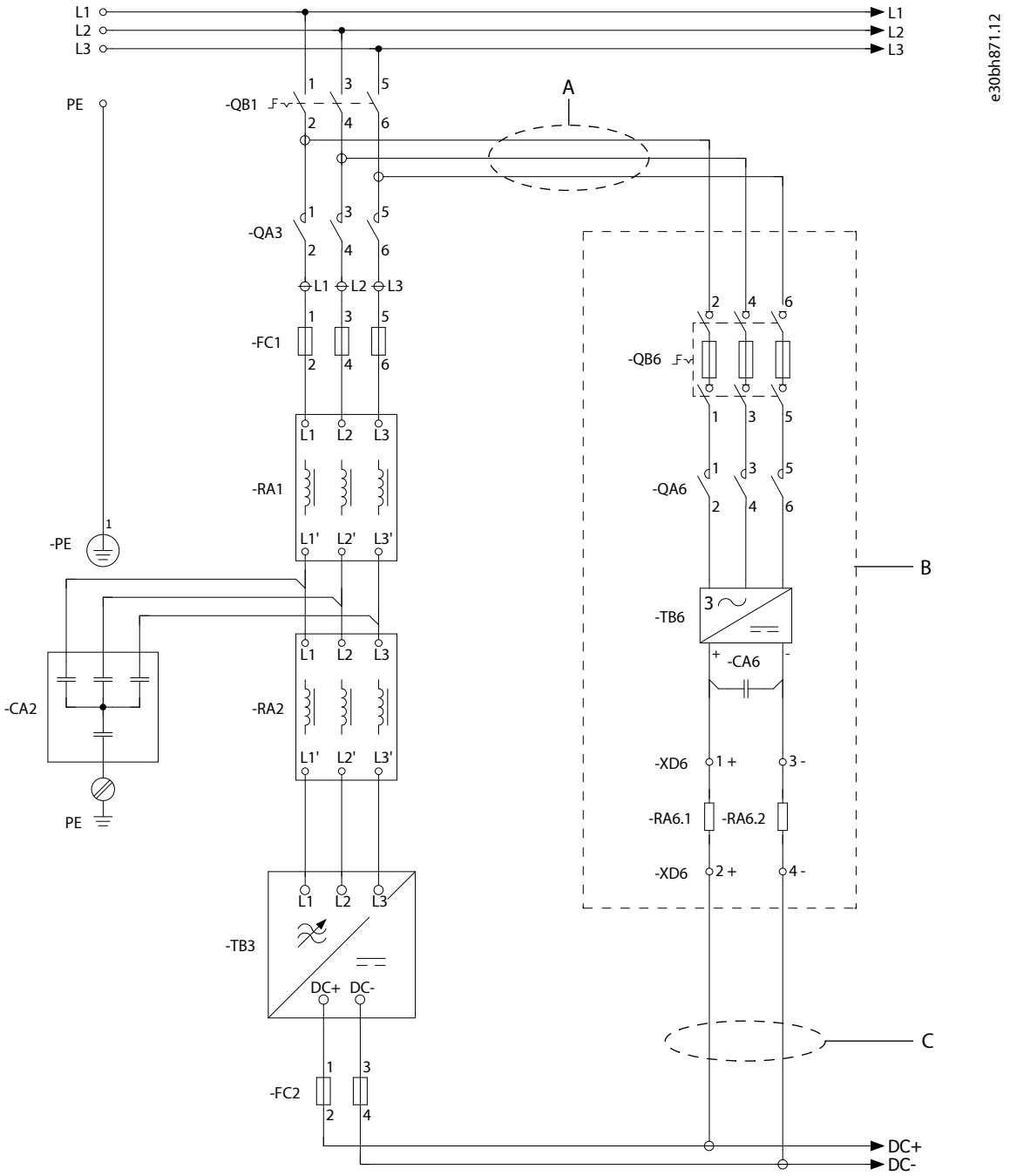

Figure 141: Pre-charging Wiring Diagram, AFE Modules

A	Double-insulated cable	B	Pre-charging circuit
C	Double-insulated cable		

Danfoss Drives Oy © 2026.09

10.3.11 Pre-charging Control Wiring Diagrams

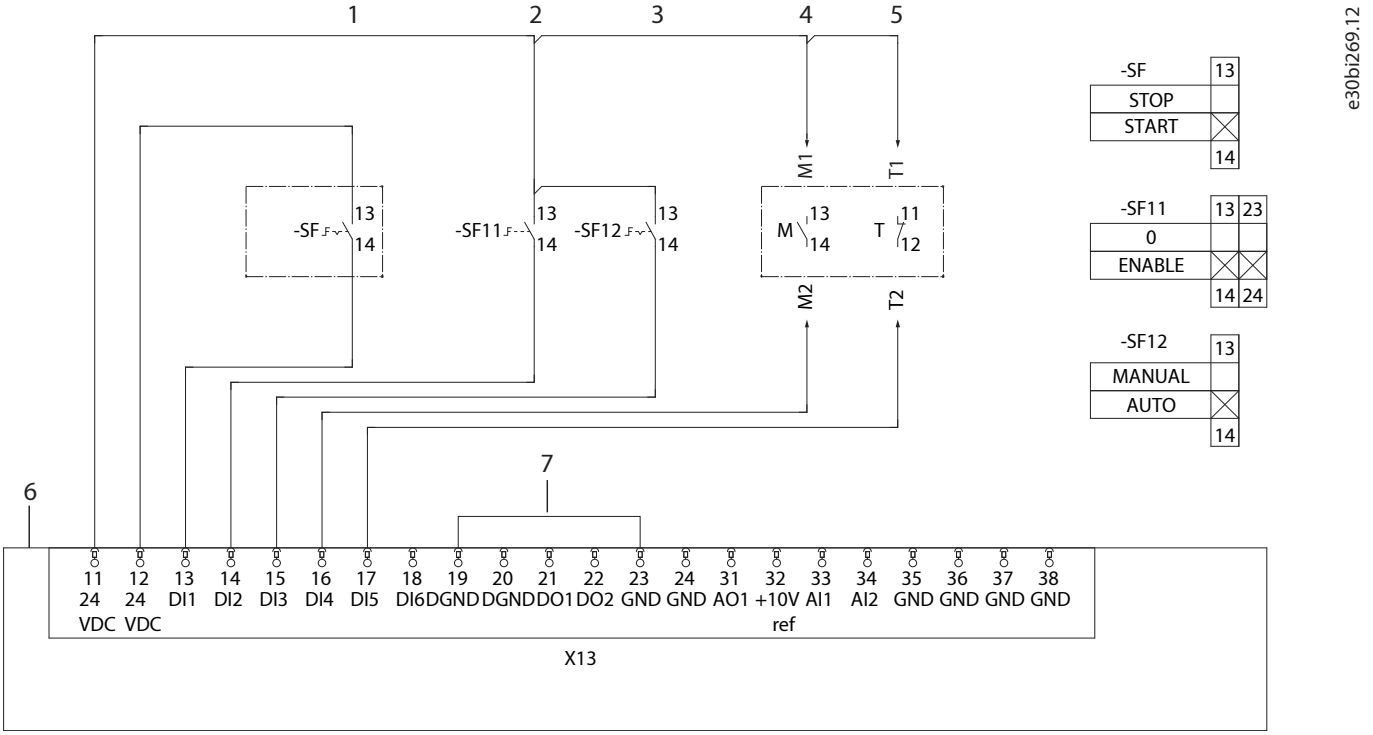

Figure 142: Pre-charging Control Wiring Diagram

1	AFE remote control start/stop	2	Mains 0-enable
3	Pre-charging man-auto	4	Main input device status
5	Main input device tripped (circuit breaker)	6	I/O option board of the AFE module
7	Jump wire (when using internal 24 V supply)		

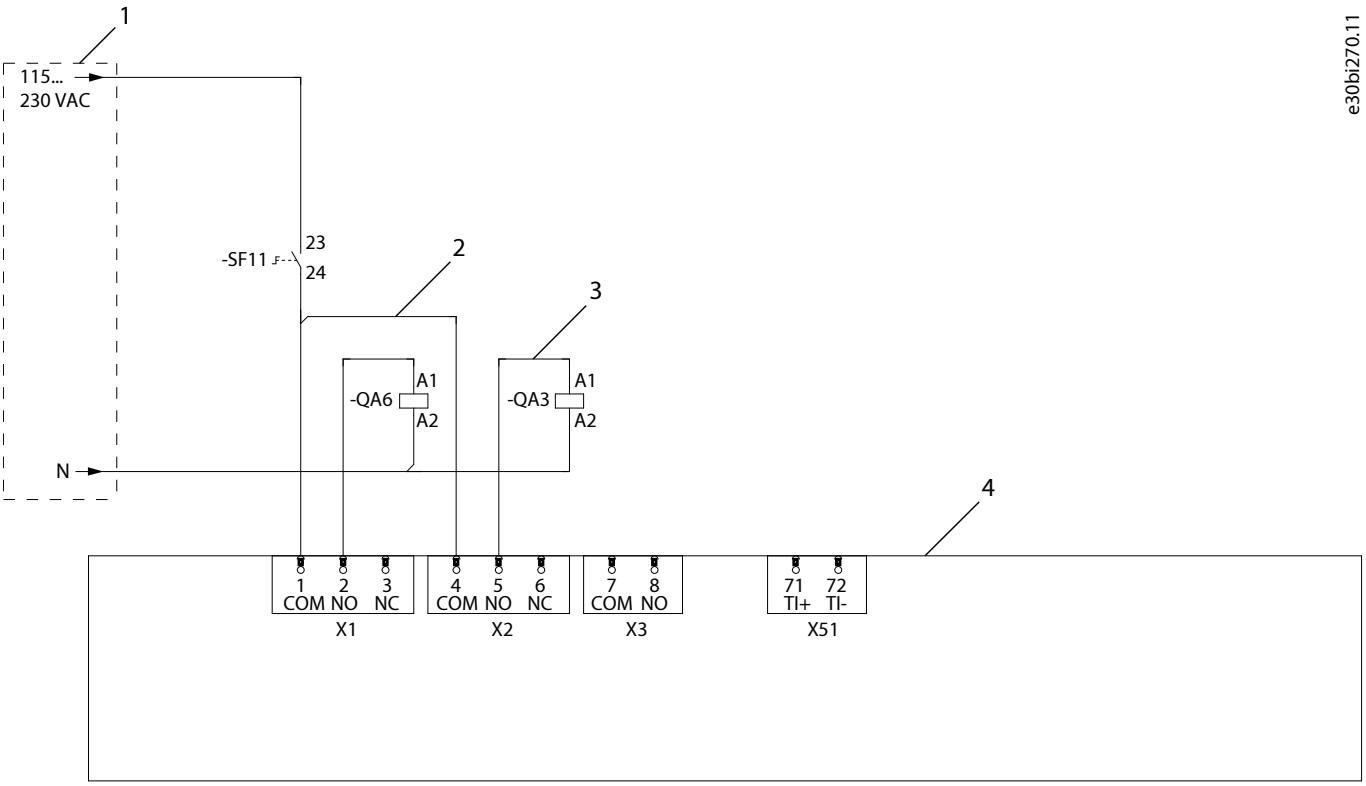

Figure 143: Pre-charging Control Wiring Diagram

1	Short-circuit protected	2	Pre-charging contactor control
3	Main input device control	4	Basic I/O of the control unit of the AFE module

10.3.12 The Pre-charging Function

NOTE: The NFE module has built-in pre-charging. This information is for the AFE and GC modules with a pre-charging unit.

To avoid high inrush current to drive capacitors, pre-charge the drive before switching on main power.

The pre-charging function uses AFE or GC control unit I/Os and relays. The pre-charging function requires auxiliary voltage for the control unit and the pre-charging circuit. Pre-charging can be operated either locally (manually or automatically) or remotely (manually). Pre-charging is enabled by activating Digital Input 2. Select the MANUAL or AUTO mode by activating/deactivating Digital Input 3 (activated = AUTO). Select remote operation by activating Digital Input 1. Connect the input device, the contactor, or the circuit breaker, the auxiliary contacts to the control unit as described in 10.3.11 Pre-charging Control Wiring Diagrams. Connect also the cooling supervision signal from the cooling module if possible. The charging circuit is protected by fuses installed in the fuse-switch disconnector. Turn the switch ON.

Manual operation

Enable pre-charging and switch it to MANUAL mode. To start pre-charging, press [Run] on the control panel of the AFE or grid converter module. The pre-charging contactor closes. When charging is done, the main input device closes, and the pre-charging contactor opens. After a power outage, perform charging again.

Auto operation

Enable pre-charging and switch it to AUTO mode. Pre-charging starts immediately. The pre-charging contactor closes. When charging is done, the main input device closes, and the pre-charging contactor opens. Charging is performed automatically after a power outage.

Remote operation

Danfoss Drives Oy © 2026.09

Enable pre-charging and set it to MANUAL mode. To start pre-charging, activate Digital Input 1. The AFE or grid converter module starts, and the pre-charging contactor closes. When charging is done, the main input device closes, and the pre-charging contactor opens. After a power outage, perform charging again.

10.3.13 Wiring Diagrams of the +24 V Supply for the Control Unit

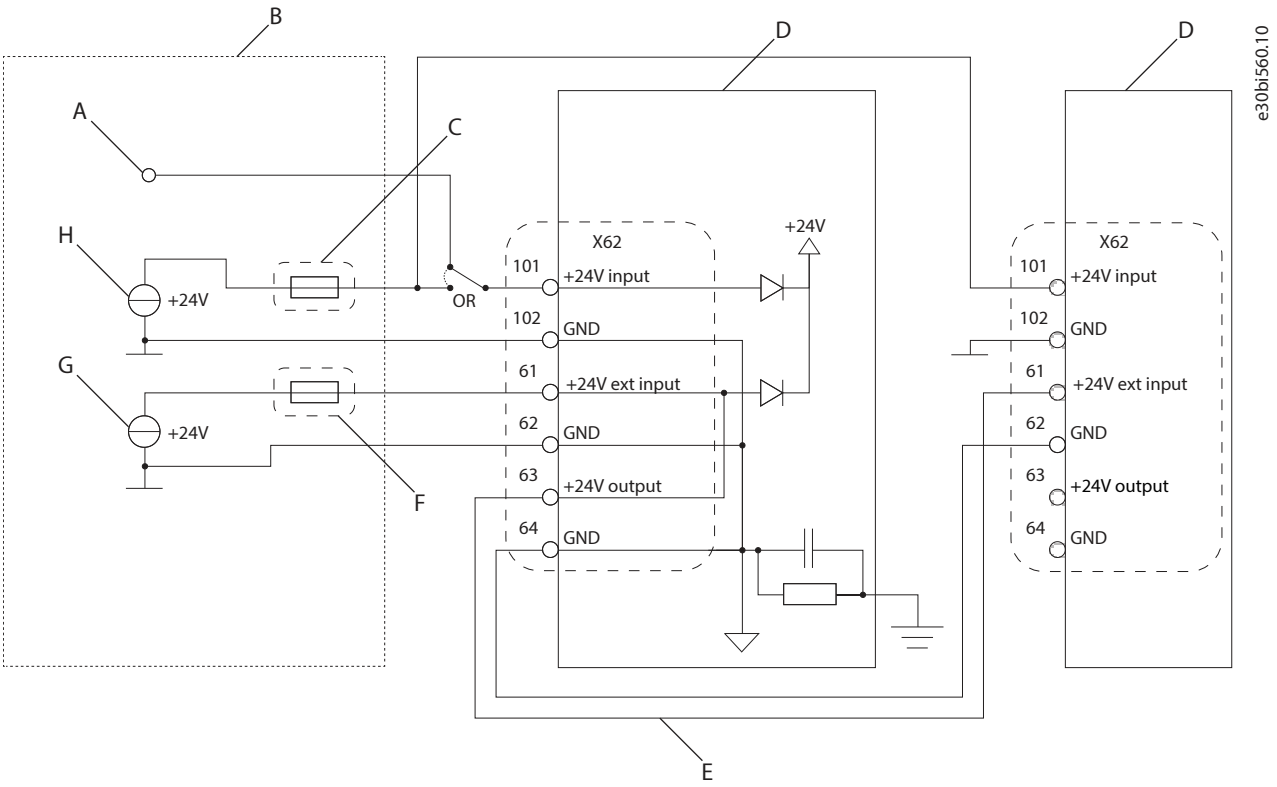

Figure 144: Wiring Diagram of Redundant Supplies

A	Internal +24 V supply (if provided)	B	Reference design, redundant +24 V power
C	3 A fuse	D	Control board
E	Power daisy-chaining	F	Fuse (Fuse rating depends on the complete daisy-chained system configuration. Maximum 10 A.)
G	Primary external supply	H	External redundant supply

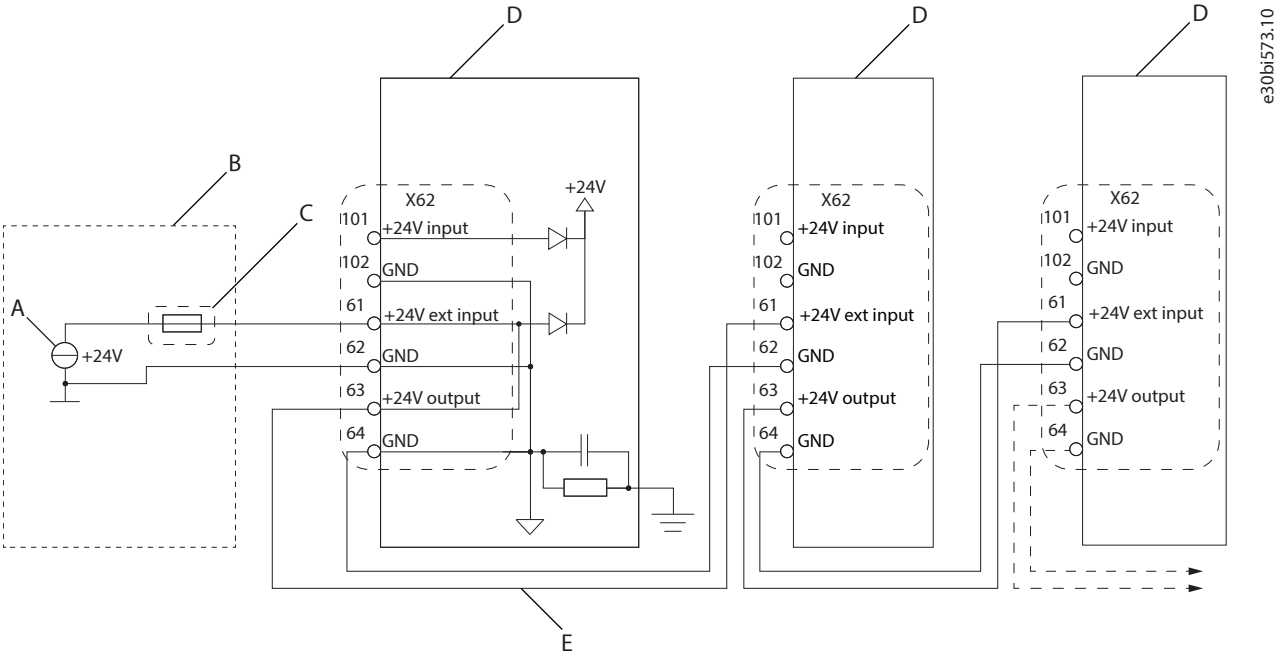

Figure 145: Wiring Diagram of a Daisy-chained +24 V Supply for the Control Units

A	Normal external supply	B	Reference design, daisy-chained +24 V power
C	Fuse (Fuse rating depends on the complete daisy-chained system configuration. Maximum 10 A.)	D	Control board
E	Power daisy-chaining		

10.4 Cable Sizes

10.4.1 General Cable Size Information

The IEC cable sizing is based on these conditions:

- Ambient temperature of 40 °C (104 °F).
- Cables laid side by side on cable ladders.
- Maximum 9 cables per ladder.
- 3 ladders on top of each other.
- XLPE insulated cables with a maximum conductor temperature of 90 °C (194 °F).

In other conditions, refer to the local safety regulations, the input voltage, and the load current of the drive.

The UL cable sizing is based on these conditions:

- Ambient temperature of 40 °C (104 °F). Conductor sizing is based on NEC table 310.15(B)(16).
- 75 °C (167 °F) rated copper cables.
- Multicore cables installed in cable ducts.
  - If cable ducts are not used, keep sufficient spacing between the cables.
  - Do not stack or bundle the cables without proper spacing for longer than 600 mm (24 in).

In other conditions, refer to the local safety regulations, the input voltage, and the load current of the drive.

Danfoss Drives Oy © 2026.09

IMPORTANT: Use symmetrical cabling with system modules connected in parallel. Each module must have the same number of cables with an equal cross-section.

The cable size tables for the air-cooled system modules can be found with these links.

- 10.4.2 Mains Cable Size Recommendations for NFE Modules, 380–500 V
- 10.4.3 Mains Cable Size Recommendations for AFE Modules, 380–500 V
- 10.4.4 Motor Cable Sizes Recommendation for Inverter Modules, 380–500 V
- 10.4.5 Motor Cable Size Recommendations for Inverter Modules with Integration Units, 380–500 V
- 10.4.6 Mains Cable Size Recommendations for NFE Modules, UL 480 V
- 10.4.7 Mains Cable Size Recommendations for AFE Modules, UL 480 V
- 10.4.8 Motor Cable Sizes Recommendation for Inverter Modules, UL 460 V
- 10.4.9 Motor Cable Size Recommendations for Inverter Modules with Integration Units, UL 460 V
- 10.4.10 Mains Cable Size Recommendations for NFE Modules, UL 600 V
- 10.4.11 Mains Cable Size Recommendations for AFE Modules, UL 600 V
- 10.4.12 Motor Cable Sizes Recommendation for Inverter Modules, UL 575 V
- 10.4.13 Motor Cable Sizes Recommendation for Inverter Modules with Integration Units, UL 575 V
- 10.4.14 Mains Cable Size Recommendations for NFE Modules, 525–690 V
- 10.4.15 Mains Cable Size Recommendations for AFE Modules, 525–690 V
- 10.4.16 Motor Cable Sizes Recommendation for Inverter Modules, 525–690 V
- 10.4.17 Motor Cable Sizes Recommendation for Inverter Modules with Integration Units, 525–690 V

10.4.2 Mains Cable Size Recommendations for NFE Modules, 380–500 V

Table 46: Mains Cable Size Recommendations for NFE Modules, 380–500 V

Model code	Frame	I_N [A]	Mains cable Cu [mm^2]	Mains cable Al [mm^2]
iC7-60SA3N05-730A	NR11	746	3x (3 x 150 + 70)	4x (3 x 150 + 41)
iC7-60SA3N05-869A		886	3x (3 x 185 + 95)	4x (3 x 185 + 57)
iC7-60SA3N05-1094		1117	4x (3 x 185 + 95)	6x (3 x 150 + 41)
iC7-60SA3N05-1420	2 x NR11	1450	6x (3 x 150+ 70)	8x (3 x 150 + 41)
iC7-60SA3N05-1600		1634	6x (3 x 185+ 95)	8x (3 x 185 + 57)
iC7-60SA3N05-2090		2134	8x (3 x 185 + 95)	12x (3 x 150 + 41)
iC7-60SA3N05-2450	3 x NR11	2501	9x (3 x 185 + 95)	12x (3 x 185 + 57)
iC7-60SA3N05-3130		3196	12x (3 x 185 + 95)	15x (3 x 185+ 57)
iC7-60SA3N05-4170	4 x NR11	4257	16x (3 x 185 + 95)	20x (3 x 185 + 57)
iC7-60SA3N05-5210	5 x NR11	5319	20x (3 x 185 + 95)	30x (3 x 150 + 41)
iC7-60SA3N05-6260	6 x NR11	6391	24x (3 x 185 + 95)	30x (3 x 185 + 57)

10.4.3 Mains Cable Size Recommendations for AFE Modules, 380–500 V

Table 47: Mains Cable Size Recommendations for AFE Modules, 380–500 V

Model code[1]	Frame	I_N [A]	Mains cable Cu [mm²]	Mains cable Al [mm²]
iC7-60SA3x05-317AE00	AM10/AR10	324	1x (3 x 150 + 70)	2x (3 x 95 + 29)
iC7-60SA3x05-400AE00		409	3x (3 x 50 + 25)	3x (3 x 95 + 29)
iC7-60SA3x05-514AE00		525	3x (3 x 70 + 35)	3x (3 x 120 + 41)
iC7-60SA3x05-580AE00	AM11/AR11	593	2x (3 x 150 + 70)	3x (3 x 150 + 41)
iC7-60SA3x05-650AE00		664	4x (3 x 70 + 35)	4x (3 x 120 + 41)
iC7-60SA3x05-730AE00		746	4x (3 x 95+ 50)	4x (3 x 150 + 41)
iC7-60SA3x05-816AE00		833	3x (3 x 150 + 70)	4x (3 x 150 + 41)
iC7-60SA3x05-920AE00	2xAM10/2xAR10	940	6x (3 x 70 + 35)	4x (3 x 185 + 57)
iC7-60SA3x05-1030E00		1052	4x (3 x 150 + 70)	6x (3 x 150 + 41)
iC7-60SA3x05-1210E00	2xAM11/2xAR11	1236	6x (3 x 120 + 70)	6x (3 x 185 + 57)
iC7-60SA3x05-1410E00		1440	6x (3 x 150 + 70)	8x (3 x 150 + 41)
iC7-60SA3x05-1630E00		1664	6x (3 x 185 + 95)	8x (3 x 185 + 57)
iC7-60SA3x05-1860E00	3xAM11/3xAR11	1899	9x (3 x 120 + 70)	9x (3 x 185 + 57)
iC7-60SA3x05-2120E00		2165	9x (3 x 150 + 70)	12x (3 x 150 + 41)
iC7-60SA3x05-2450E00		2501	9x (3 x 185 + 95)	12x (3 x 185 + 57)
iC7-60SA3x05-2800E00	4xAM11/4xAR11	2859	12x (3 x 150 + 70)	16x (3 x 150 + 41)
iC7-60SA3x05-3270E00		3338	12x (3 x 185 + 95)	16x (3 x 185 + 57)
iC7-60SA3x05-3650E00	5xAM11/5xAR11	3726	15x (3 x 150+ 70)	20x (3 x 150 + 41)
iC7-60SA3x05-4080E00		4165	15x (3 x 150 + 70)	20x (3 x 150 + 41)
iC7-60SA3x05-4500E00	6xAM11/6xAR11	4594	18x (3 x 150 + 70)	24x (3 x 150 + 41)
iC7-60SA3x05-4900E00		5002	18x (3 x 185 + 95)	24x (3 x 185 + 57)

1) Model codes starting with iC7-60SA3A05 or iC7-60SA3H05

10.4.4 Motor Cable Sizes Recommendation for Inverter Modules, 380–500 V

Table 48: Motor Cable Size Recommendations for Inverter Modules, 380–500 V

Model code	Frame	I_N [A]	Motor cable Cu [mm²]	Motor cable Al [mm²]	Maximum terminal cable size [mm²][1]	Number of grounding terminals/ bolt size	Maximum number of cables/ bolt size
iC7-60SAIN05-385A	IM10	394	3x (3 x 50 + 25)	2x (3 x 120 + 41)	240Cu/Al	1/M8	3/M10
iC7-60SAIN05-480A		490	3x (3 x 70 + 35)	3x (3 x 120 + 41)	240Cu/Al	1/M8	3/M10
iC7-60SAIN05-590A		603	3x (3 x 95 + 50)	3x (3 x 150+ 41)	240Cu/Al	1/M8	3/M10
iC7-60SAIN05-658A	IM11	672	4x (3 x 70 + 35)	4x (3 x 120 + 41)	300Cu/Al	1/M8	4/M12
iC7-60SAIN05-730A		746	4x (3 x 95 + 50)	4x (3 x 150 + 41)	300Cu/Al	1/M8	4/M12
iC7-60SAIN05-820A		838	3x (3 x 150 + 70)	4x (3 x 150 + 41)	300Cu/Al	1/M8	4/M12
iC7-60SAIN05-880A		899	4x (3 x 120 + 70)	4x (3 x 185 + 57)	300Cu/Al	1/M8	4/M12

Danfoss Drives Oy © 2026.09

Table 48: Motor Cable Size Recommendations for Inverter Modules, 380–500 V - (continued)

Model code	Frame	I_N [A]	Motor cable Cu [mm^2]	Motor cable Al [mm^2]	Maximum terminal cable size [mm^2][(1)]	Number of grounding terminals/ bolt size	Maximum number of cables/ bolt size
iC7-60SAIN05-1000	2xIM10	1021	6x (3 x 95 + 50)	6x (3 x 120 + 41)	240Cu/Al	2/M8	6/M10
iC7-60SAIN05-1100		1123	6x (3 x 95 + 50)	6x (3 x 150 + 41)	240Cu/Al	2/M8	6/M10
iC7-60SAIN05-1260	2xIM11	1287	6x (3 x 120 + 70)	8x (3 x 120 + 41)	300Cu/Al	2/M8	8/M12
iC7-60SAIN05-1450		1481	8x (3 x 95 + 50)	8x (3 x 150 + 41)	300Cu/Al	2/M8	8/M12
iC7-60SAIN05-1710		1746	8x (3 x 120 + 70)	8x (3 x 185 + 57)	300Cu/Al	2/M8	8/M12
iC7-60SAIN05-1760	3xIM11	1797	9x (3 x 120 + 70)	12x (3 x 120 + 41)	300Cu/Al	3/M8	12/M12
iC7-60SAIN05-1960		2 001	9x (3 x 150 + 70)	12x (3 x 120 + 41)	300Cu/Al	3/M8	12/M12
iC7-60SAIN05-2150		2 195	9x (3 x 150 + 70)	12x (3 x 150 + 41)	300Cu/Al	3/M8	12/M12
iC7-60SAIN05-2510		2 563	12x (3 x 120 + 70)	12x (3 x 185 + 57)	300Cu/Al	3/M8	12/M12
iC7-60SAIN05-2640	4xIM11	2 695	12x (3 x 120 + 70)	16x (3 x 120 + 41)	300Cu/Al	4/M8	16/M12
iC7-60SAIN05-2880		2 940	12x (3 x 150 + 70)	16x (3 x 150 + 41)	300Cu/Al	4/M8	16/M12
iC7-60SAIN05-3280		3 349	16x (3 x 120 + 70)	16x (3 x 150 + 41)	300Cu/Al	4/M8	16/M12
iC7-60SAIN05-3600	5xIM11	3 675	15x (3 x 150 + 70)	15x (3 x 185 + 57)	300Cu/Al	5/M8	20/M12
iC7-60SAIN05-4060		4 145	20x (3 x 120 + 70)	20x (3 x 150 + 41)	300Cu/Al	5/M8	20/M12
iC7-60SAIN05-4320	6xIM11	4 410	18x (3 x 150 + 70)	18x (3 x 185 + 57)	300Cu/Al	6/M8	24/M12
iC7-60SAIN05-4870		4 972	24x (3 x 120 + 70)	24x (3 x 150 + 41)	300Cu/Al	6/M8	24/M12

1) The bolt hole spacing is 35 mm. Check the width of the cable lug.

10.4.5 Motor Cable Size Recommendations for Inverter Modules with Integration Units, 380–500 V

Table 49: Motor Cable Size Recommendations for Inverter Modules with Integration Units, 380–500 V

Model code	Frame	I_N [A]	Motor cable Cu [mm^2]	Motor cable Al [mm^2]	Maximum terminal cable size [mm^2]	Number of grounding terminals/ bolt size	Maximum number of cables/ bolt size
iC7-60SAIN05-385A	IR10	394	3x (3 x 50 + 25)	2x (3 x 120 + 41)	240Cu/Al	1/M8	4/M10
iC7-60SAIN05-480A		490	3x (3 x 70 + 35)	3x (3 x 120 + 41)	240Cu/Al	1/M8	4/M10
iC7-60SAIN05-590A		603	3x (3 x 95 + 50)	3x (3 x 150+ 41)	240Cu/Al	1/M8	4/M10
iC7-60SAIN05-658A	IR11	672	4x (3 x 70 + 35)	4x (3 x 120 + 41)	300Cu/Al	1/M8	4/M10
iC7-60SAIN05-730A		746	4x (3 x 95 + 50)	4x (3 x 150 + 41)	300Cu/Al	1/M8	4/M10
iC7-60SAIN05-820A		838	3x (3 x 150 + 70)	4x (3 x 150 + 41)	300Cu/Al	1/M8	4/M10
iC7-60SAIN05-880A		899	4x (3 x 120 + 70)	4x (3 x 185 + 57)	300Cu/Al	1/M8	4/M10
iC7-60SAIN05-1000	2xIR10	1021	6x (3 x 95 + 50)	6x (3 x 120 + 41)	240Cu/Al	2/M8	8/M10
iC7-60SAIN05-1100		1123	6x (3 x 95 + 50)	6x (3 x 150 + 41)	240Cu/Al	2/M8	8/M10

Table 49: Motor Cable Size Recommendations for Inverter Modules with Integration Units, 380–500 V - (continued)

Model code	Frame	I_N [A]	Motor cable Cu [mm^2]	Motor cable Al [mm^2]	Maximum terminal cable size [mm^2]	Number of grounding terminals/ bolt size	Maximum number of cables/ bolt size
iC7-60SAIN05-1260	2xIR11	1287	6x (3 x 120 + 70)	8x (3 x 120 + 41)	300Cu/Al	2/M8	8/M10
iC7-60SAIN05-1450		1481	8x (3 x 95 + 50)	8x (3 x 150 + 41)	300Cu/Al	2/M8	8/M10
iC7-60SAIN05-1710		1746	8x (3 x 120 + 70)	8x (3 x 185 + 57)	300Cu/Al	2/M8	8/M10
iC7-60SAIN05-1760	3xIR11	1797	9x (3 x 120 + 70)	12x (3 x 120 + 41)	300Cu/Al	3/M8	12/M10
iC7-60SAIN05-1960		2 001	9x (3 x 150 + 70)	12x (3 x 120 + 41)	300Cu/Al	3/M8	12/M10
iC7-60SAIN05-2150		2 195	9x (3 x 150 + 70)	12x (3 x 150 + 41)	300Cu/Al	3/M8	12/M10
iC7-60SAIN05-2510		2 563	12x (3 x 120 + 70)	12x (3 x 185 + 57)	300Cu/Al	3/M8	12/M10
iC7-60SAIN05-2640	4xIR11	2 695	12x (3 x 120 + 70)	16x (3 x 120 + 41)	300Cu/Al	4/M8	16/M10
iC7-60SAIN05-2880		2 940	12x (3 x 150 + 70)	16x (3 x 150 + 41)	300Cu/Al	4/M8	16/M10
iC7-60SAIN05-3280		3 349	16x (3 x 120 + 70)	16x (3 x 150 + 41)	300Cu/Al	4/M8	16/M10
iC7-60SAIN05-3600	5xIR11	3 675	15x (3 x 150 + 70)	15x (3 x 185 + 57)	300Cu/Al	5/M8	20/M10
iC7-60SAIN05-4060		4 145	20x (3 x 120 + 70)	20x (3 x 150 + 41)	300Cu/Al	5/M8	20/M10
iC7-60SAIN05-4320	6xIR11	4 410	18x (3 x 150 + 70)	18x (3 x 185 + 57)	300Cu/Al	6/M8	24/M10
iC7-60SAIN05-4870		4 972	24x (3 x 120 + 70)	24x (3 x 150 + 41)	300Cu/Al	6/M8	24/M10

10.4.6 Mains Cable Size Recommendations for NFE Modules, UL 480 V

Table 50: Mains Cable Size Recommendations for NFE Modules, UL 480 V

Model code	Frame	I_N [A]	Mains cable Cu	Mains cable termination, Panduit terminal part number
iC7-60SA3N05-730A	NR11	746	4 x 250 MCM	LCAX250-12-X
iC7-60SA3N05-869A		886	5 x 250 MCM	LCAX250-12-X
iC7-60SA3N05-1094		1117	6 x 300 MCM	LCAX300-12-6
iC7-60SA3N05-1420	2 x NR11	1450	8 x 300 MCM	LCAX300-12-6
iC7-60SA3N05-1600		1637	8 x 350 MCM	LCAX350-12-6
iC7-60SA3N05-2090		2134	12 x 250 MCM	LCAX250-12-X
iC7-60SA3N05-2450	3 x NR11	2501	12 x 350 MCM	LCAX350-12-6
iC7-60SA3N05-3130		3196	15 x 350 MCM	LCAX350-12-6
iC7-60SA3N05-4170	4 x NR11	4257	20 x 350 MCM	LCAX350-12-6
iC7-60SA3N05-5210	5 x NR11	5319	20 x 500 MCM	LCAX500-12-6
iC7-60SA3N05-6260	6 x NR11	6391	24 x 500 MCM	LCAX500-12-6

Danfoss Drives Oy © 2026.09

10.4.7 Mains Cable Size Recommendations for AFE Modules, UL 480 V

Table 51: Mains Cable Size Recommendations for AFE Modules, UL 480 V

Model code[1]	Frame	I_N [A]	Mains cable Cu	Mains cable termination, Panduit terminal part number
iC7-60SA3x05-317AE00	AM10/AR10	316	2 x 4/0 AWG	LCAX4/0-12-X
iC7-60SA3x05-400AE00		388	2 x 300 MCM	LCAX300-12-6
iC7-60SA3x05-514AE00		473	3 x 4/0 AWG	LCAX4/0-12-X
iC7-60SA3x05-580AE00	AM11/AR11	531	3 x 250 MCM	LCAX250-12-X
iC7-60SA3x05-650AE00		598	3 x 300 MCM	LCAX300-12-6
iC7-60SA3x05-730AE00		664	4 x 250 MCM	LCAX250-12-X
iC7-60SA3x05-816AE00		747	4 x 300 MCM	LCAX300-12-6
iC7-60SA3x05-920AE00	2 x AM10/2 x AR10	843	4 x 350 MCM	LCAX350-12-6
iC7-60SA3x05-1030E00		950	6 x 4/0 AWG	LCAX4/0-12-X
iC7-60SA3x05-1210E00	2 x AM11/2 x AR11	1103	6 x 300 MCM	LCAX300-12-6
iC7-60SA3x05-1410E00		1276	6 x 350 MCM	LCAX350-12-6
iC7-60SA3x05-1630E00		1491	8 x 300 MCM	LCAX300-12-6
iC7-60SA3x05-1860E00	3 x AM11/3 x AR11	1705	9 x 300 MCM	LCAX300-12-6
iC7-60SA3x05-2120E00		1950	9 x 350 MCM	LCAX350-12-6
iC7-60SA3x05-2450E00		2236	12 x 300 MCM	LCAX300-12-6
iC7-60SA3x05-2800E00	4 x AM11/4 x AR11	2563	12 x 350 MCM	LCAX350-12-6
iC7-60SA3x05-3270E00		2981	16 x 300 MCM	LCAX300-12-6
iC7-60SA3x05-3650E00	5 x AM11/5 x AR11	3359	20 x 250 MCM	LCAX250-12-X
iC7-60SA3x05-4080E00		3726	20 x 300 MCM	LCAX300-12-6
iC7-60SA3x05-4500E00	6 x AM11/6 x AR11	4094	24 x 250 MCM	LCAX250-12-X
iC7-60SA3x05-4900E00		4482	24 x 300 MCM	LCAX300-12-6

1) Model codes starting with iC7-60SA3A05 or iC7-60SA3H05

10.4.8 Motor Cable Sizes Recommendation for Inverter Modules, UL 460 V

Table 52: Motor Cable Sizes Recommendation for Inverter Modules, UL 460 V

Model code	Frame	I_N [A]	Motor cable Cu	Motor cable termination, Panduit terminal part number[1]	Maximum terminal cable size	Number of grounding terminals/ bolt size	Maximum number of cables/ bolt size
iC7-60SAIN05-385A	IM10	394	2x300 MCM	LCAX300-12-6	350 MCM	1/M6	3/M10
iC7-60SAIN05-480A		490	3x250 MCM	LCAX250-12-X	350 MCM	1/M6	3/M10
iC7-60SAIN05-590A		543	3x300 MCM	LCAX300-12-6	350 MCM	1/M6	3/M10

Table 52: Motor Cable Sizes Recommendation for Inverter Modules, UL 460 V - (continued)

Model code	Frame	I_N [A]	Motor cable Cu	Motor cable termination, Panduit terminal part number[1]	Maximum terminal cable size	Number of grounding terminals/ bolt size	Maximum number of cables/ bolt size
iC7-60SAIN05-658A	IM11	603	3x350 MCM	LCAN350-12-X	350 MCM	1/M6	4/M12
iC7-60SAIN05-730A		672	4x250 MCM	LCAX250-12-X	350 MCM	1/M6	4/M12
iC7-60SAIN05-820A		746	4x300 MCM	LCAX300-12-6	350 MCM	1/M6	4/M12
iC7-60SAIN05-880A		838	4x350 MCM	LCAN350-12-X	350 MCM	1/M6	4/M12
iC7-60SAIN05-1000	2xIM10	940	6x4/0 AWG	LCAX4/0-12-X	350 MCM	2/M6	6/M10
iC7-60SAIN05-1100		1052	6x250 MCM	LCAX250-12-X	350 MCM	2/M6	6/M10
iC7-60SAIN05-1260	2xIM11	1174	6x300 MCM	LCAX300-12-6	350 MCM	2/M6	8/M12
iC7-60SAIN05-1450		1328	8x250 MCM	LCAX250-12-X	350 MCM	2/M6	8/M12
iC7-60SAIN05-1710		1603	8x350 MCM	LCAN350-12-X	350 MCM	2/M6	8/M12
iC7-60SAIN05-1760	3xIM11	1787	9x350 MCM	LCAN350-12-X	350 MCM	3/M6	12/M12
iC7-60SAIN05-1960		1 940	9x350 MCM	LCAN350-12-X	350 MCM	3/M6	12/M12
iC7-60SAIN05-2150		2 083	12x250 MCM	LCAX250-12-X	350 MCM	3/M6	12/M12
iC7-60SAIN05-2510		2 389	12x300 MCM	LCAX300-12-6	350 MCM	3/M6	12/M12
iC7-60SAIN05-2640	4xIM11	2 532	12x350 MCM	LCAN350-12-X	350 MCM	4/M8	16/M12
iC7-60SAIN05-2880		2 685	16x250 MCM	LCAX250-12-X	350 MCM	4/M8	16/M12
iC7-60SAIN05-3280		3 114	16x300 MCM	LCAX300-12-6	350 MCM	4/M8	16/M12
iC7-60SAIN05-3600	5xIM11	3 573	20x250 MCM	LCAX250-12-X	350 MCM	5/M8	20/M12
iC7-60SAIN05-4060		3 859	20x300 MCM	LCAX300-12-6	350 MCM	5/M8	20/M12
iC7-60SAIN05-4320	6xIM11	4 176	24x250 MCM	LCAX250-12-X	350 MCM	6/M8	24/M12
iC7-60SAIN05-4870		4 625	24x300 MCM	LCAX300-12-6	350 MCM	6/M8	24/M12

1) The bolt hole spacing is 35 mm. Because of the limited space, LCAN350-12-X narrow lug type is recommended for 350 MCM conductors.

10.4.9 Motor Cable Size Recommendations for Inverter Modules with Integration Units, UL 460 V

Table 53: Motor Cable Size Recommendations for Inverter Modules with Integration Units, UL 460 V

Model code	Frame	I_N [A]	Motor cable Cu	Motor cable termination, Panduit terminal part number	Maximum terminal cable size	Number of grounding terminals/ bolt size	Maximum number of cables/ bolt size
iC7-60SAIN05-385A	IR10	394	2x300 MCM	LCAX300-12-6	500 MCM	1/M8	4/M10
iC7-60SAIN05-480A		490	3x250 MCM	LCAX250-12-X	500 MCM	1/M8	4/M10
iC7-60SAIN05-590A		543	3x300 MCM	LCAX300-12-6	500 MCM	1/M8	4/M10
iC7-60SAIN05-658A	IR11	603	3x350 MCM	LCAX350-12-6	500 MCM	1/M8	4/M10
iC7-60SAIN05-730A		672	4x250 MCM	LCAX250-12-X	500 MCM	1/M8	4/M10
iC7-60SAIN05-820A		746	4x300 MCM	LCAX300-12-6	500 MCM	1/M8	4/M10
iC7-60SAIN05-880A		838	4x350 MCM	LCAX350-12-6	500 MCM	1/M8	4/M10

Danfoss Drives Oy © 2026.09

Table 53: Motor Cable Size Recommendations for Inverter Modules with Integration Units, UL 460 V - (continued)

Model code	Frame	I_N [A]	Motor cable Cu	Motor cable termination, Panduit terminal part number	Maximum terminal cable size	Number of grounding terminals/ bolt size	Maximum number of cables/ bolt size
iC7-60SAIN05-1000	2xIR10	940	6x4/0 AWG	LCAX4/0-12-X	500 MCM	2/M8	8/M10
iC7-60SAIN05-1100		1052	6x250 MCM	LCAX250-12-X	500 MCM	2/M8	8/M10
iC7-60SAIN05-1260	2xIR11	1174	6x300 MCM	LCAX300-12-6	500 MCM	2/M8	8/M10
iC7-60SAIN05-1450		1328	8x250 MCM	LCAX250-12-X	500 MCM	2/M8	8/M10
iC7-60SAIN05-1710		1603	8x350 MCM	LCAX350-12-6	500 MCM	2/M8	8/M10
iC7-60SAIN05-1760	3xIR11	1807	9x350 MCM	LCAX350-12-6	500 MCM	3/M8	12/M10
iC7-60SAIN05-1960		1 940	9x350 MCM	LCAX350-12-6	500 MCM	3/M8	12/M10
iC7-60SAIN05-2150		2 083	12x250 MCM	LCAX250-12-X	500 MCM	3/M8	12/M10
iC7-60SAIN05-2510		2 389	12x300 MCM	LCAX300-12-6	500 MCM	3/M8	12/M10
iC7-60SAIN05-2640	4xIR11	2 532	12x350 MCM	LCAX350-12-6	500 MCM	4/M8	16/M12
iC7-60SAIN05-2880		2 685	16x250 MCM	LCAX250-12-X	500 MCM	4/M8	16/M12
iC7-60SAIN05-3280		3 114	16x300 MCM	LCAX300-12-6	500 MCM	4/M8	16/M12
iC7-60SAIN05-3600	5xIR11	3 573	20x250 MCM	LCAX250-12-X	500 MCM	5/M8	20/M12
iC7-60SAIN05-4060		3 859	20x300 MCM	LCAX300-12-6	500 MCM	5/M8	20/M12
iC7-60SAIN05-4320	6xIR11	4 176	24x250 MCM	LCAX250-12-X	500 MCM	6/M8	24/M12
iC7-60SAIN05-4870		4 625	24x300 MCM	LCAX300-12-6	500 MCM	6/M8	24/M12

10.4.10 Mains Cable Size Recommendations for NFE Modules, UL 600 V

Table 54: Mains Cable Size Recommendations for NFE Modules, UL 600 V

Model code	Frame	I_N [A]	Mains cable Cu	Mains cable termination, Panduit terminal part number
iC7-60SA3N07-504A	NR11	515	2 x 250 MCM	LCAX250-12-X
iC7-60SA3N07-605A		618	3x 350 MCM	LCAX350-12-6
iC7-60SA3N07-806A		823	4x 350 MCM	LCAX350-12-6
iC7-60SA3N07-1007		1028	6x 250 MCM	LCAX250-12-X
iC7-60SA3N07-1100	2 x NR11	1174	6x 300 MCM	LCAX300-12-6
iC7-60SA3N07-1500		1532	8x 300 MCM	LCAX300-12-6
iC7-60SA3N07-1960		2001	12x 250 MCM	LCAX250-12-X
iC7-60SA3N07-2300	3 x NR11	2348	12x 300 MCM	LCAX300-12-6
iC7-60SA3N07-2900		2961	15x 300 MCM	LCAX300-12-6
iC7-60SA3N07-3850	4 x NR11	3931	20x 300 MCM	LCAX300-12-6
iC7-60SA3N07-4800	5 x NR11	4900	20x 500 MCM	LCAX500-12-6
iC7-60SA3N07-5750	6 x NR11	5870	24x 500 MCM	LCAX500-12-6

10.4.11 Mains Cable Size Recommendations for AFE Modules, UL 600 V

Table 55: Mains Cable Size Recommendations for AFE Modules, UL 600 V

Model code[1]	Frame	I_N [A]	Mains cable Cu	Mains cable termination, Panduit terminal part number
iC7-60SA3x07-236A	AM10	241	2x 3/0 AWG	LCAX3/0-12-X
iC7-60SA3x07-300A	AM10	307	2x 4/0 AWG	LCAX4/0-12-X
iC7-60SA3x07-334A	AM10	341	2 x 250 MCM	LCAX250-12-X
iC7-60SA3x07-380A	AM10	388	2 x 300 MCM	LCAX300-12-6
iC7-60SA3x07-425A	AM11	434	3x 4/0 AWG	LCAX4/0-12-X
iC7-60SA3x07-475A	AM11	485	3 x 250 MCM	LCAX250-12-X
iC7-60SA3x07-530A	AM11	542	3 x 300 MCM	LCAX300-12-6
iC7-60SA3x07-595A	2xAM10	608	4x 4/0 AWG	LCAX4/0-12-X
iC7-60SA3x07-670A	2xAM10	684	4 x 250 MCM	LCAX250-12-X
iC7-60SA3x07-760A	2xAM10	776	4 x 300 MCM	LCAX300-12-6
iC7-60SA3x07-850A	2xAM11	868	6x 4/0 AWG	LCAX4/0-12-X
iC7-60SA3x07-945A	2xAM11	965	6 x 250 MCM	LCAX250-12-X
iC7-60SA3x07-1060A	2xAM11	1083	6 x 300 MCM	LCAX300-12-6
iC7-60SA3x07-1190A	3xAM11	1215	9x 3/0 AWG	LCAX3/0-12-X
iC7-60SA3x07-1325A	3xAM11	1353	9x 4/0 AWG	LCAX4/0-12-X
iC7-60SA3x07-1590A	3xAM11	1624	9 x 300 MCM	LCAX300-12-6
iC7-60SA3x07-1780A	4xAM11	1817	12x 4/0 AWG	LCAX4/0-12-X
iC7-60SA3x07-2120A	4xAM11	2165	12 x 300 MCM	LCAX300-12-6
iC7-60SA3x07-2380A	5xAM11	2430	15 x 250 MCM	LCAX250-12-X
iC7-60SA3x07-2650A	5xAM11	2706	15 x 300 MCM	LCAX300-12-6
iC7-60SA3x07-2970A	6xAM11	3032	18 x 250 MCM	LCAX250-12-X
iC7-60SA3x07-3180A	6xAM11	3247	18 x 300 MCM	LCAX300-12-6
iC7-60SA3x07-3350A	7xAM11	3420	21 x 250 MCM	LCAX250-12-X
iC7-60SA3x07-3710A	7xAM11	3788	21 x 300 MCM	LCAX300-12-6
iC7-60SA3x07-4000A	8xAM11	4084	24 x 250 MCM	LCAX250-12-X
iC7-60SA3x07-4240A	8xAM11	4329	24 x 300 MCM	LCAX300-12-6

1) Model codes starting with iC7-60SA3A07 or iC7-60SA3H07

Danfoss Drives Oy © 2026.09

10.4.12 Motor Cable Sizes Recommendation for Inverter Modules, UL 575 V

Table 56: Motor Cable Sizes Recommendation for Inverter Modules, UL 575 V

Model code	Frame	I_N [A]	Motor cable Cu	Motor cable termination, Panduit terminal part number	Maximum terminal cable size	Number of grounding terminals/ bolt size	Maximum number of cables/ bolt size
iC7-60SAIN07-261A	IM10	267	2x 3/0 AWG	LCAX3/0-12-X	350 MCM	1/M8	3/M10
iC7-60SAIN07-325A		332	2 x 250 MCM	LCAX250-12-X	350 MCM	1/M8	3/M10
iC7-60SAIN07-365A		373	2 x 300 MCM	LCAX300-12-6	350 MCM	1/M8	3/M10
iC7-60SAIN07-416A		425	3x 4/0 AWG	LCAX4/0-12-X	350 MCM	1/M8	3/M10
iC7-60SAIN07-465A	IM11	475	3x 4/0 AWG	LCAX4/0-12-X	350 MCM	1/M8	4/M12
iC7-60SAIN07-525A		536	4x 3/0 AWG	LCAX3/0-12-X	350 MCM	1/M8	4/M12
iC7-60SAIN07-590A		603	4x 4/0 AWG	LCAX4/0-12-X	350 MCM	1/M8	4/M12
iC7-60SAIN07-650A	2 x IM10	664	4 x 250 MCM	LCAX250-12-X	350 MCM	2/M8	6/M10
iC7-60SAIN07-730A		746	4 x 300 MCM	LCAX300-12-6	350 MCM	2/M8	6/M10
iC7-60SAIN07-820A		838	4 x 350 MCM	LCAN350-12-6	350 MCM	2/M8	6/M10
iC7-60SAIN07-945A	2 x IM11	965	6 x 250 MCM	LCAX250-12-X	350 MCM	2/M8	8/M12
iC7-60SAIN07-1060		1083	6 x 300 MCM	LCAX300-12-X	350 MCM	2/M8	8/M12
iC7-60SAIN07-1180		1205	6 x 350 MCM	LCAN350-12-X	350 MCM	2/M8	8/M12
iC7-60SAIN07-1300	3 x IM11	1328	9x 4/0 AWG	LCAX4/0-12-X	350 MCM	3/M8	12/M12
iC7-60SAIN07-1500		1532	9 x 250 MCM	LCAX250-12-X	350 MCM	3/M8	12/M12
iC7-60SAIN07-1770		1807	12x 4/0 AWG	LCAX4/0-12-X	350 MCM	3/M8	12/M12
iC7-60SAIN07-1950	4 x IM11	1991	12 x 250 MCM	LCAX250-12-X	350 MCM	4/M8	16/M12
iC7-60SAIN07-2360		2410	12 x 350 MCM	LCAN350-12-X	350 MCM	4/M8	16/M12
iC7-60SAIN07-2600	5 x IM11	2655	15 x 300 MCM	LCAX300-12-6	350 MCM	5/M8	20/M12
iC7-60SAIN07-2950		3012	15 x 350 MCM	LCAN350-12-X	350 MCM	5/M8	20/M12
iC7-60SAIN07-3250	6 x IM11	3318	18 x 300 MCM	LCAX300-12-6	350 MCM	6/M8	24/M12
iC7-60SAIN07-3540		3614	18 x 350 MCM	LCAN350-12-X	350 MCM	6/M8	24/M12
iC7-60SAIN07-3800	7 x IM11	3879	21 x 300 MCM	LCAX300-12-6	350 MCM	7/M8	28/M12
iC7-60SAIN07-4130		4216	21 x 350 MCM	LCAN350-12-X	350 MCM	7/M8	28/M12
iC7-60SAIN07-4400	8 x IM11	4492	24 x 300 MCM	LCAX300-12-6	350 MCM	8/M8	32/M12
iC7-60SAIN07-4720		4819	24 x 350 MCM	LCAN350-12-X	350 MCM	8/M8	32/M12

10.4.13 Motor Cable Sizes Recommendation for Inverter Modules with Integration Units, UL 575 V

Table 57: Motor Cable Sizes Recommendation for Inverter Modules with Integration Units, UL 575 V

Model code	Frame	I_N [A]	Motor cable Cu	Motor cable termination, Panduit terminal part number	Maximum terminal cable size	Number of grounding terminals/ bolt size	Maximum number of cables/ bolt size
iC7-60SAIN07-261A	IR10	267	2x 3/0 AWG	LCAX3/0-12-X	500 MCM	1/M8	4/M10
iC7-60SAIN07-325A		332	2 x 250 MCM	LCAX250-12-X	500 MCM	1/M8	4/M10
iC7-60SAIN07-365A		373	2 x 300 MCM	LCAX300-12-6	500 MCM	1/M8	4/M10
iC7-60SAIN07-416A		425	3x 4/0 AWG	LCAX4/0-12-X	500 MCM	1/M8	4/M10
iC7-60SAIN07-465A	IR11	475	3x 4/0 AWG	LCAX4/0-12-X	500 MCM	1/M8	4/M10
iC7-60SAIN07-525A		536	4x 3/0 AWG	LCAX3/0-12-X	500 MCM	1/M8	4/M10
iC7-60SAIN07-590A		603	4x 4/0 AWG	LCAX4/0-12-X	500 MCM	1/M8	4/M10
iC7-60SAIN07-650A	2 x IR10	664	4 x 250 MCM	LCAX250-12-X	500 MCM	2/M8	8/M10
iC7-60SAIN07-730A		746	4 x 300 MCM	LCAX300-12-6	500 MCM	2/M8	8/M10
iC7-60SAIN07-820A		838	4 x 350 MCM	LCAX350-12-6	500 MCM	2/M8	8/M10
iC7-60SAIN07-945A	2 x IR11	965	6 x 250 MCM	LCAX250-12-X	500 MCM	2/M8	8/M10
iC7-60SAIN07-1060		1083	6 x 300 MCM	LCAX300-12-6	500 MCM	2/M8	8/M10
iC7-60SAIN07-1180		1205	6 x 350 MCM	LCAX350-12-6	500 MCM	2/M8	8/M10
iC7-60SAIN07-1300	3xIR11	1328	9x 4/0 AWG	LCAX4/0-12-X	500 MCM	3/M8	12/M10
iC7-60SAIN07-1500		1532	9 x 250 MCM	LCAX250-12-X	500 MCM	3/M8	12/M10
iC7-60SAIN07-1770		1807	12x 4/0 AWG	LCAX4/0-12-X	500 MCM	3/M8	12/M10
iC7-60SAIN07-1950	4 x IR11	1991	12 x 250 MCM	LCAX250-12-X	500 MCM	4/M8	16/M10
iC7-60SAIN07-2360		2410	12 x 350 MCM	LCAX350-12-6	500 MCM	4/M8	16/M10
iC7-60SAIN07-2600	5 x IR11	2655	15 x 300 MCM	LCAX300-12-6	500 MCM	5/M8	20/M10
iC7-60SAIN07-2950		3012	15 x 350 MCM	LCAX350-12-6	500 MCM	5/M8	20/M10
iC7-60SAIN07-3250	6 x IR11	3318	18 x 300 MCM	LCAX300-12-6	500 MCM	6/M8	24/M10
iC7-60SAIN07-3540		3614	18 x 350 MCM	LCAX350-12-6	500 MCM	6/M8	24/M10
iC7-60SAIN07-3800	7 x IR11	3879	21 x 300 MCM	LCAX300-12-6	500 MCM	7/M8	28/M10
iC7-60SAIN07-4130		4216	21 x 350 MCM	LCAX350-12-6	500 MCM	7/M8	28/M10
iC7-60SAIN07-4400	8 x IR11	4492	24 x 300 MCM	LCAX300-12-6	500 MCM	8/M8	32/M10
iC7-60SAIN07-4720		4819	24 x 350 MCM	LCAX350-12-6	500 MCM	8/M8	32/M10

Danfoss Drives Oy © 2026.09

10.4.14 Mains Cable Size Recommendations for NFE Modules, 525–690 V

Table 58: Mains Cable Size Recommendations for NFE Modules, 525–690 V

Model code	Frame	I_N [A]	Mains cable Cu [mm^2]	Mains cable Al [mm^2]
iC7-60SA3N07-504A	NR11	515	2x (3 x 185+ 95)	2x (3 x 240 + 72)
iC7-60SA3N07-605A		618	3x (3 x 150 + 70)	3x (3 x 185 + 57)
iC7-60SA3N07-806A		823	3x (3 x 185 + 95)	4x (3 x 185 + 57)
iC7-60SA3N07-1007		1028	4x (3 x 185 + 95)	4x (3 x 240 + 72)
iC7-60SA3N07-1150	2 x NR11	1174	4x (3 x 185 + 95)	6x (3 x 150 + 41)
iC7-60SA3N07-1500		1532	6x (3 x 185 + 95)	8x (3 x 150 + 41)
iC7-60SA3N07-1960		2001	8x (3 x 150 + 70)	8x (3 x 240 + 72)
iC7-60SA3N07-2300	3 x NR11	2348	9x (3 x 185 + 95)	12x (3 x 185+ 72)
iC7-60SA3N07-2900		2961	12x (3 x 150 + 70)	12x (3 x 240 + 72)
iC7-60SA3N07-3850	4 x NR11	3931	16x (3 x 150 + 70)	16x (3 x 240 + 72)
iC7-60SA3N07-4800	5 x NR11	4900	20x (3 x 150 + 70)	20x (3 x 240 + 72)
iC7-60SA3N07-5750	6 x NR11	5870	24x (3 x 150 + 70)	24x (3 x 240 + 72)

10.4.15 Mains Cable Size Recommendations for AFE Modules, 525–690 V

Table 59: Mains Cable Size Recommendations for AFE Modules, 525–690 V

Model code[(1)]	Frame	I_N [A]	Mains cable Cu [mm^2]	Mains cable Al [mm^2]
iC7-60SA3x07-236A	AM10	241	1x(3 x 95 + 50)	1x(3 x 150 + 41)
iC7-60SA3x07-300A	AM10	307	1x(3 x 150 + 70)	2x(3 x 95 + 29)
iC7-60SA3x07-334A	AM10	341	1x(3 x 150 + 70)	2x(3 x 120 + 41)
iC7-60SA3x07-380A	AM10	388	2x(3 x 95 + 50)	2x(3 x 120 + 41)
iC7-60SA3x07-425A	AM11	434	2x(3 x 95 + 50)	2x(3 x 150 + 41)
iC7-60SA3x07-475A	AM11	485	2x(3 x 120 + 70)	3x(3 x 120 + 41)
iC7-60SA3x07-530A	AM11	542	2x(3 x 150 + 70)	3x(3 x 120 + 41)
iC7-60SA3x07-595A	2xAM10	608	4x(3 x 70 + 35)	4x(3 x 120 + 41)
iC7-60SA3x07-670A	2xAM10	684	4x(3 x 95 + 50)	4x(3 x 120 + 41)
iC7-60SA3x07-760A	2xAM10	776	4x(3 x 95 + 50)	4x(3 x 150 + 41)
iC7-60SA3x07-850A	2xAM11	868	4x(3 x 120 + 70)	6x(3 x 95 + 29)
iC7-60SA3x07-945A	2xAM11	965	4x(3 x 150 + 70)	6x(3 x 120 + 41)
iC7-60SA3x07-1060	2xAM11	1083	6x(3 x 95 + 50)	6x(3 x 150 + 41)
iC7-60SA3x07-1190	3xAM11	1215	6x(3 x 120 + 70)	9x(3 x 95 + 29)
iC7-60SA3x07-1325	3xAM11	1353	6x(3 x 150 + 70)	9x(3 x 120 + 41)
iC7-60SA3x07-1590	3xAM11	1624	9x(3 x 95 + 50)	9x(3 x 150 + 41)
iC7-60SA3x07-1780	4xAM11	1817	8x(3 x 150 + 70)	12x(3 x 120 + 41)
iC7-60SA3x07-2120	4xAM11	2165	8x(3 x 185 + 95)	12x(3 x 150 + 41)
iC7-60SA3x07-2380	5xAM11	2430	10x(3 x 150 + 70)	15x(3 x 120 + 41)

Table 59: Mains Cable Size Recommendations for AFE Modules, 525–690 V - (continued)

Model code[1]	Frame	I_N [A]	Mains cable Cu [mm²]	Mains cable Al [mm²]
iC7-60SA3x07-2650	5xAM11	2706	10x(3 x 185 + 95)	15x(3 x 150 + 41)
iC7-60SA3x07-2970	6xAM11	3032	12x(3 x 185 + 95)	18x(3 x 150 + 41)
iC7-60SA3x07-3180	6xAM11	3247	12x(3 x 185 + 95)	18x(3 x 150 + 41)
iC7-60SA3x07-3350	7xAM11	3420	14x(3 x 150 + 70)	21x(3 x 150 + 41)
iC7-60SA3x07-3710	7xAM11	3788	14x(3 x 185 + 95)	21x(3 x 150 + 41)
iC7-60SA3x07-4000	8xAM11	4084	16x(3 x 185 + 95)	24x(3 x 150 + 41)
iC7-60SA3x07-4240	8xAM11	4329	16x(3 x 185 + 95)	24x(3 x 150 + 41)

1) Model codes starting with iC7-60SA3A07 or iC7-60SA3H07

10.4.16 Motor Cable Sizes Recommendation for Inverter Modules, 525–690 V

Table 60: Motor Cable Sizes Recommendation for Inverter Modules, 525–690 V

Model code	Frame	I_N [A]	Motor cable Cu [mm²]	Motor cable Al [mm²]	Maximum terminal cable size [mm²]	Number of grounding terminals/ bolt size	Maximum number of cables/ bolt size
iC7-60SAIN07-261A	IM10	267	2x(3 x 50 + 25)	1x(3 x 185 + 57)	240Cu/Al	1/M8	3/M10
iC7-60SAIN07-325A	IM10	332	1x(3 x 150 + 70)	2x(3 x 95 + 29)	240Cu/Al	1/M8	3/M10
iC7-60SAIN07-365A	IM10	373	1x(3 x 185 + 95)	2x(3 x 120 + 41)	240Cu/Al	1/M8	3/M10
iC7-60SAIN07-416A	IM10	425	2x(3 x 95 + 50)	2x(3 x 150 + 41)	240Cu/Al	1/M8	3/M10
iC7-60SAIN07-465A	IM11	475	2x(3 x 120 + 70)	3x(3 x 120 + 41)	300Cu/Al	1/M8	4/M12
iC7-60SAIN07-525A	IM11	536	2x(3 x 150 + 70)	3x(3 x 120 + 41)	300Cu/Al	1/M8	4/M12
iC7-60SAIN07-590A	IM11	603	3x(3 x 95 + 50)	2x(3 x 150 + 41)	300Cu/Al	1/M8	4/M12
iC7-60SAIN07-650A	2xIM10	664	6x(3 x 50 + 50)	4x(3 x 120 + 41)	240Cu/Al	2/M8	6/M10
iC7-60SAIN07-730A	2xIM10	746	4x(3 x 95 + 50)	4x(3 x 150 + 41)	240Cu/Al	2/M8	6/M10
iC7-60SAIN07-820A	2xIM10	838	4x(3 x 120 + 70)	4x(3 x 185 + 57)	240Cu/Al	2/M8	6/M10
iC7-60SAIN07-945A	2xIM11	965	4x(3 x 150 + 70)	6x(3 x 120 + 41)	300Cu/Al	2/M8	8/M12
iC7-60SAIN07-1060	2xIM11	1083	6x(3 x 95 + 50)	6x(3 x 150 + 41)	300Cu/Al	2/M8	8/M12
iC7-60SAIN07-1180	2xIM11	1205	6x(3 x 120 + 70)	6x(3 x 185 + 57)	300Cu/Al	2/M8	8/M12
iC7-60SAIN07-1300	3xIM11	1328	6x(3 x 150 + 70)	9x(3 x 120 + 41)	300Cu/Al	3/M8	12/M12
iC7-60SAIN07-1500	3xIM11	1532	9x(3 x 95 + 50)	9x(3 x 150 + 41)	300Cu/Al	3/M8	12/M12
iC7-60SAIN07-1770	3xIM11	1807	9x(3 x 120 + 70)	9x(3 x 185 + 57)	300Cu/Al	3/M8	12/M12
iC7-60SAIN07-1950	4xIM11	1991	8x(3 x 185+ 95)	12x(3 x 150 + 41)	300Cu/Al	4/M8	16/M12
iC7-60SAIN07-2360	4xIM11	2410	12x(3 x 120 + 70)	12x(3 x 185 + 57)	300Cu/Al	4/M8	16/M12
iC7-60SAIN07-2600	5xIM11	2655	10x(3 x 185+ 95)	15x(3 x 150 + 41)	300Cu/Al	5/M8	20/M12
iC7-60SAIN07-2950	5xIM11	3012	15x(3 x 120 + 70)	15x(3 x 185 + 57)	300Cu/Al	5/M8	20/M12
iC7-60SAIN07-3250	6xIM11	3318	12x(3 x 185+ 95)	18x(3 x 150 + 41)	300Cu/Al	6/M8	24/M12
iC7-60SAIN07-3540	6xIM11	3614	18x(3 x 120 + 70)	18x(3 x 185 + 57)	300Cu/Al	6/M8	24/M12
iC7-60SAIN07-3800	7xIM11	3879	14x(3 x 185 + 95)	21x(3 x 150 + 41)	300Cu/Al	7/M8	28/M12

Danfoss Drives Oy © 2026.09

Table 60: Motor Cable Sizes Recommendation for Inverter Modules, 525–690 V - (continued)

Model code	Frame	I_N [A]	Motor cable Cu [mm^2]	Motor cable Al [mm^2]	Maximum terminal cable size [mm^2]	Number of grounding terminals/ bolt size	Maximum number of cables/ bolt size
iC7-60SAIN07-4130	7xIM11	4216	14x(3 x 240 + 120)	21x(3 x 185 + 57)	300Cu/Al	7/M8	28/M12
iC7-60SAIN07-4400	8xIM11	4492	16x(3 x 185+ 95)	24x(3 x 150 + 41)	300Cu/Al	8/M8	32/M12
iC7-60SAIN07-4720	8xIM11	4819	16x(3 x 240+ 120)	24x(3 x 185 + 57)	300Cu/Al	8/M8	32/M12

10.4.17 Motor Cable Sizes Recommendation for Inverter Modules with Integration Units, 525–690 V

Table 61: Motor Cable Sizes Recommendation for Inverter Modules with Integration Units, 525–690 V

Model code	Frame	I_N [A]	Motor cable Cu [mm^2]	Motor cable Al [mm^2]	Maximum terminal cable size [mm^2]	Number of grounding terminals/ bolt size	Maximum number of cables/ bolt size
iC7-60SAIN07-261A	IR10	267	2x(3 x 50 + 25)	1x(3 x 185 + 57)	240Cu/Al	1/M8	4/M10
iC7-60SAIN07-325A		332	1x(3 x 150 + 70)	2x(3 x 95 + 29)	240Cu/Al	1/M8	4/M10
iC7-60SAIN07-365A		373	1x(3 x 185 + 95)	2x(3 x 120 + 41)	240Cu/Al	1/M8	4/M10
iC7-60SAIN07-416A		425	2x(3 x 95 + 50)	2x(3 x 150 + 41)	240Cu/Al	1/M8	4/M10
iC7-60SAIN07-465A	IR11	475	2x(3 x 120 + 70)	3x(3 x 120 + 41)	300Cu/Al	1/M8	4/M10
iC7-60SAIN07-525A		536	2x(3 x 150 + 70)	3x(3 x 120 + 41)	300Cu/Al	1/M8	4/M10
iC7-60SAIN07-590A		603	3x(3 x 95 + 50)	2x(3 x 150 + 41)	300Cu/Al	1/M8	4/M10
iC7-60SAIN07-650A	2 x IR10	664	6x(3 x 50 + 50)	4x(3 x 120 + 41)	240Cu/Al	2/M8	8/M10
iC7-60SAIN07-730A		746	4x(3 x 95 + 50)	4x(3 x 150 + 41)	240Cu/Al	2/M8	8/M10
iC7-60SAIN07-820A		838	4x(3 x 120 + 70)	4x(3 x 185 + 57)	240Cu/Al	2/M8	8/M10
iC7-60SAIN07-945A	2 x IR11	965	4x(3 x 150 + 70)	6x(3 x 120 + 41)	300Cu/Al	2/M8	8/M10
iC7-60SAIN07-1060		1083	6x(3 x 95 + 50)	6x(3 x 150 + 41)	300Cu/Al	2/M8	8/M10
iC7-60SAIN07-1180		1205	6x(3 x 120 + 70)	6x(3 x 185 + 57)	300Cu/Al	2/M8	8/M10
iC7-60SAIN07-1300	3 x IR11	1328	6x(3 x 150 + 70)	9x(3 x 120 + 41)	300Cu/Al	3/M8	12/M10
iC7-60SAIN07-1500		1532	9x(3 x 95 + 50)	9x(3 x 150 + 41)	300Cu/Al	3/M8	12/M10
iC7-60SAIN07-1770		1807	9x(3 x 120 + 70)	9x(3 x 185 + 57)	300Cu/Al	3/M8	12/M10
iC7-60SAIN07-1950	4 x IR11	1991	8x(3 x 185+ 95)	12x(3 x 150 + 41)	300Cu/Al	4/M8	16/M10
iC7-60SAIN07-2360		2410	12x(3 x 120 + 70)	12x(3 x 185 + 57)	300Cu/Al	4/M8	16/M10
iC7-60SAIN07-2600	5 x IR11	2655	10x(3 x 185+ 95)	15x(3 x 150 + 41)	300Cu/Al	5/M8	20/M10
iC7-60SAIN07-2950		3012	15x(3 x 120 + 70)	15x(3 x 185 + 57)	300Cu/Al	5/M8	20/M10
iC7-60SAIN07-3250	6 x IR11	3318	12x(3 x 185+ 95)	18x(3 x 150 + 41)	300Cu/Al	6/M8	24/M10
iC7-60SAIN07-3540		3614	18x(3 x 120 + 70)	18x(3 x 185 + 57)	300Cu/Al	6/M8	24/M10
iC7-60SAIN07-3800	7 x IR11	3879	14x(3 x 185 + 95)	21x(3 x 150 + 41)	300Cu/Al	7/M8	28/M10
iC7-60SAIN07-4130		4216	14x(3 x 240 + 120)	21x(3 x 185 + 57)	300Cu/Al	7/M8	28/M10

Table 61: Motor Cable Sizes Recommendation for Inverter Modules with Integration Units, 525–690 V - (continued)

Model code	Frame	I_N [A]	Motor cable Cu [mm^2]	Motor cable Al [mm^2]	Maximum terminal cable size [mm^2]	Number of grounding terminals/ bolt size	Maximum number of cables/ bolt size
iC7-60SAIN07-4400	8 x IR11	4492	16x(3 x 185+ 95)	24x(3 x 150 + 41)	300Cu/Al	8/M8	32/M10
iC7-60SAIN07-4720		4819	16x(3 x 240+ 120)	24x(3 x 185 + 57)	300Cu/Al	8/M8	32/M10

10.5 Fuses

10.5.1 List of Fuse Size Information

The fuse size tables for the air-cooled system modules can be found with these links.

- 10.5.2 AC Fuses for NFE, 380–500 V AC
- 10.5.3 DC Fuses for NFE, 465–740 V DC
- 10.5.4 AC Fuses for NFE, 525–690 V AC
- 10.5.5 DC Fuses for NFE, 640–1100 V DC
- 10.5.6 AC Fuses for AFE or GC, 380–500 V AC
- 10.5.7 DC Fuses for AFE or GC, 465–740 V DC
- 10.5.8 AC Fuses for AFE, 525–690 V AC
- 10.5.9 DC Fuses for AFE, 640–1100 V DC
- 10.5.10 DC Fuses for Inverter Modules, 465–740 V DC
- 10.5.11 DC Fuses for Inverter Modules, 640–1100 V DC

10.5.2 AC Fuses for NFE, 380–500 V AC

Table 62: AC Fuses for NFE, 380–500 V AC

Model code	Frame	Rated current I_L [A]	Number of fuses	Fuse size	Mersen part number[1]	Fuse U_n [V]	Fuse I_n [A]	Minimum $I_{cp,mr}$ [A]
iC7-60SA3N05-730A	NR11	730	6	33	PC33UD69V550TF	690	550	6600
iC7-60SA3N05-869A		869			PC33UD69V700TF	690	700	9600
iC7-60SA3N05-1094		1094			PC33UD69V800TF	690	800	12300
iC7-60SA3N05-1420A	2 x NR11	1420	12	33	PC33UD69V550TF	690	550	–
iC7-60SA3N05-1600		1600			PC33UD69V700TF	690	700	–
iC7-60SA3N05-2090		2090			PC33UD69V800TF	690	800	–
iC7-60SA3N05-2450	3 x NR11	2450	18	33	PC33UD69V700TF	690	700	–
iC7-60SA3N05-3130		3130			PC33UD69V800TF	690	800	–
iC7-60SA3N05-4170	4 x NR11	4170	24	33	PC33UD69V800TF	690	800	–

Danfoss Drives Oy © 2026.09

Table 62: AC Fuses for NFE, 380–500 V AC - (continued)

Model code	Frame	Rated current I_L [A]	Number of fuses	Fuse size	Mersen part number[1]	Fuse U_n [V]	Fuse I_n [A]	Minimum $I_{cp,mr}$ [A]
iC7-60SA3N05-5210	5 x NR11	5210	30	33	PC33UD69V800TF	690	800	–
iC7-60SA3N05-6260	6 x NR11	6260	36	33	PC33UD69V800TF	690	800	–

1) Available as option +AJFX

10.5.3 DC Fuses for NFE, 465–740 V DC

Table 63: DC Fuses for NFE, 465–740 V DC

Model code	Frame	Rated current I_L [A]	Number of fuses	Fuse size	Mersen part number[1]	Fuse U_n [V]	Fuse I_n [A]
iC7-60SA3N05-730A	NR11	730	4	73	PC73UD13C630TF	1250	630
iC7-60SA3N05-869A		869			PC73UD13C800TF	1250	800
iC7-60SA3N05-1094		1094			PC73UD10C1000TF	1000	1000
iC7-60SA3N05-1420	2 x NR11	1420	8	73	PC73UD13C630TF	1250	630
iC7-60SA3N05-1600		1600			PC73UD13C700TF	1250	700
iC7-60SA3N05-2090		2090			PC73UD10C1000TF	1000	1000
iC7-60SA3N05-2450	3 x NR11	2450	12	73	PC73UD13C700TF	1250	700
iC7-60SA3N05-3130		3130			PC73UD10C1000TF	1000	1000
iC7-60SA3N05-4170	4 x NR11	4170	16	73	PC73UD10C1000TF	1000	1000
iC7-60SA3N05-5210	5 x NR11	5210	20	73	PC73UD10C1000TF	1000	1000
iC7-60SA3N05-6260	6 x NR11	6260	24	73	PC73UD10C1000TF	1000	1000

1) Available as option +AKFX

10.5.4 AC Fuses for NFE, 525–690 V AC

Table 64: AC Fuses for NFE, 525–690 V AC

Model code	Frame	Rated current I_L [A]	Number of fuses	Fuse size	Mersen part number[1]	Fuse U_n [V]	Fuse I_n [A]	Minimum $I_{cp,mr}$ [A]
iC7-60SA3N07-504A	NR11	504	6	33	PC33UD69V550TF	690	550	6600
iC7-60SA3N07-605A		605			PC33UD69V550TF	690	550	6600
iC7-60SA3N07-806A		806			PC33UD69V700TF	690	700	9600
iC7-60SA3N07-1007		1007			PC33UD69V800TF	690	800	12300
iC7-60SA3N07-1150	2 x NR11	1150	12	33	PC33UD69V550TF	690	550	–
iC7-60SA3N07-1500		1500			PC33UD69V700TF	690	700	–
iC7-60SA3N07-1960		1960			PC33UD69V800TF	690	800	–
iC7-60SA3N07-2300	3 x NR11	2300	18	33	PC33UD69V700TF	690	700	–
iC7-60SA3N07-2900		2900			PC33UD69V800TF	690	800	–

Table 64: AC Fuses for NFE, 525–690 V AC - (continued)

Model code	Frame	Rated current I_L [A]	Number of fuses	Fuse size	Mersen part number[1]	Fuse U_n [V]	Fuse I_n [A]	Minimum $I_{cp,mr}$ [A]
iC7-60SA3N07-3850	4 x NR11	3850	24	33	PC33UD69V800TF	690	800	–
iC7-60SA3N07-4800	5 x NR11	4800	30	33	PC33UD69V800TF	690	800	–
iC7-60SA3N07-5750	6 x NR11	5750	36	33	PC33UD69V800TF	690	800	–

1) Available as option +AJFX

10.5.5 DC Fuses for NFE, 640–1100 V DC

Table 65: DC Fuses for NFE, 640–1100 V DC

Model code	Frame	Rated current I_L [A]	Number of fuses	Fuse size	Mersen part number[1]	Fuse U_n [V]	Fuse I_n [A]
iC7-60SA3N07-504A	NR11	504	4	73	PC73UD13C630TF	1250	630
iC7-60SA3N07-605A		605			PC73UD13C630TF	1250	630
iC7-60SA3N07-806A		806			PC73UD13C700TF	1250	700
iC7-60SA3N07-1007		1007			PC73UD12C900TF	1200	900
iC7-60SA3N07-1150	2 x NR11	1150	8	73	PC73UD13C630TF	1250	630
iC7-60SA3N07-1500		1500			PC73UD13C700TF	1250	700
iC7-60SA3N07-1960		1960			PC73UD12C900TF	1200	900
iC7-60SA3N07-2300	3 x NR11	2300	12	73	PC73UD13C700TF	1250	700
iC7-60SA3N07-2900		2900			PC73UD12C900TF	1200	900
iC7-60SA3N07-3850	4 x NR11	3850	16	73	PC73UD12C900TF	1200	900
iC7-60SA3N07-4800	5 x NR11	4800	20	73	PC73UD12C900TF	1200	900
iC7-60SA3N07-5750	6 x NR11	5750	24	73	PC73UD12C900TF	1200	900

1) Available as option +AKFX

10.5.6 AC Fuses for AFE or GC, 380–500 V AC

Table 66: AC Fuses for AFE or GC, 380–500 V AC

Model code[1]	Frame	Rated current I_L [A]	Number of fuses	Fuse size	Mersen part number[2]	Fuse U_n [V]	Fuse I_n [A]	Minimum $I_{cp,mr}$ [A]
iC7-60SAxx05-317AE00	AM10/ AR10	317	3	33	PC33UD69V550TF	690	550	3300
iC7-60SAxx05-400AE00		400			PC33UD69V550TF	690	550	3300
iC7-60SAxx05-514AE00		514			PC33UD69V700TF	690	700	4800

Danfoss Drives Oy © 2026.09

Table 66: AC Fuses for AFE or GC, 380–500 V AC - (continued)

Model code[1]	Frame	Rated current I_L [A]	Number of fuses	Fuse size	Mersen part number[2]	Fuse U_n [V]	Fuse I_n [A]	Minimum $I_{cp,mr}$ [A]
iC7-60SAxx05-580AE00	AM11/ AR11	580	6	33	PC33UD69V550TF	690	550	6600
iC7-60SAxx05-650AE00		650			PC33UD69V550TF	690	550	6600
iC7-60SAxx05-730AE00		730			PC33UD69V550TF	690	550	6600
iC7-60SAxx05-816AE00		816			PC33UD69V550TF	690	550	6600
iC7-60SAxx05-920E00	2 x AM10/ 2 x AR10	920	6	33	PC33UD69V700TF	690	700	–
iC7-60SAxx05-1030E00		1030			PC33UD69V700TF	690	700	–
iC7-60SAxx05-1210E00	2 x AM11/ 2 x AR11	1210	12	33	PC33UD69V550TF	690	550	–
iC7-60SAxx05-1410E00		1410			PC33UD69V550TF	690	550	–
iC7-60SAxx05-1630E00		1630			PC33UD69V550TF	690	550	–
iC7-60SAxx05-1860E00	3 x AM11/ 3 x AR11	1860	18	33	PC33UD69V550TF	690	550	–
iC7-60SAxx05-2120E00		2120			PC33UD69V550TF	690	550	–
iC7-60SAxx05-2450E00		2450			PC33UD69V550TF	690	550	–
iC7-60SAxx05-2800E00	4 x AM11/ 4 x AR11	2800	24	33	PC33UD69V550TF	690	550	–
iC7-60SAxx05-3270E00		3270			PC33UD69V550TF	690	550	–
iC7-60SAxx05-3650E00	5 x AM11/ 5 x AR11	3650	30	33	PC33UD69V550TF	690	550	–
iC7-60SAxx05-4080E00		4080			PC33UD69V550TF	690	550	–
iC7-60SAxx05-4500E00	6 x AM11/ 6 x AR11	4500	36	33	PC33UD69V550TF	690	550	–
iC7-60SAxx05-4900E00		4900			PC33UD69V550TF	690	550	–

1) Model codes starting with iC7-60SA3A05, iC7-60SA3H05, or iC7-60SAGC05

2) Available as option +AJFX

10.5.7 DC Fuses for AFE or GC, 465–740 V DC

Table 67: DC Fuses for AFE or GC, 465–740 V DC

Model code[1]	Frame	Rated current I_L [A]	Number of fuses	Fuse size	Mersen part number[2]	Fuse U_n [V]	Fuse I_n [A]
iC7-60SAxx05-317AE00	AM10/AR10	317	2	73	PC73UD13C630TF	1250	630
iC7-60SAxx05-400AE00		400			PC73UD13C800TF	1250	800
iC7-60SAxx05-514AE00		514			PC73UD10C1000TF	1000	1000
iC7-60SAxx05-580AE00	AM11/AR11	580	2	73	PC73UD90V13CTF	900	1250
iC7-60SAxx05-650AE00		650			PC73UD90V13CTF	900	1250
iC7-60SAxx05-730AE00		730			PC73UD85V14CTF	850	1400
iC7-60SAxx05-816AE00		816			PC73UD85V14CTF	850	1400

Table 67: DC Fuses for AFE or GC, 465–740 V DC - (continued)

Model code[1]	Frame	Rated current I_L [A]	Number of fuses	Fuse size	Mersen part number[2]	Fuse U_n [V]	Fuse I_n [A]
iC7-60SAxx05-920E00	2 x AM10/ 2 x AR10	920	4	73	PC73UD13C800TF	1250	800
iC7-60SAxx05-1030E00		1030			PC73UD10C1000TF	1000	1000
iC7-60SAxx05-1210E00	2 x AM11/ 2 x AR11	1210	4	73	PC73UD90V13CTF	900	1250
iC7-60SAxx05-1410E00		1410			PC73UD85V14CTF	850	1250
iC7-60SAxx05-1630E00		1630			PC73UD85V14CTF	850	1400
iC7-60SAxx05-1860E00	3 x AM11/ 3 x AR11	1860	6	73	PC73UD90V13CTF	900	1250
iC7-60SAxx05-2120E00		2120			PC73UD90V13CTF	900	1250
iC7-60SAxx05-2450E00		2450			PC73UD85V14CTF	850	1400
iC7-60SAxx05-2800E00	4 x AM11/ 4 x AR11	2800	8	73	PC73UD90V13CTF	900	1250
iC7-60SAxx05-3270E00		3270			PC73UD85V14CTF	850	1400
iC7-60SAxx05-3650E00	5 x AM11/ 5 x AR11	3650	10	73	PC73UD85V14CTF	850	1250
iC7-60SAxx05-4080E00		4080			PC73UD85V14CTF	850	1400
iC7-60SAxx05-4500E00	6 x AM11/ 6 x AR11	4500	12	73	PC73UD85V14CTF	850	1250
iC7-60SAxx05-4900E00		4900			PC73UD85V14CTF	850	1400

1) Model codes starting with iC7-60SA3A05, iC7-60SA3H05, or iC7-60SAGC05

2) Available as option +AKFX

10.5.8 AC Fuses for AFE, 525–690 V AC

Table 68: AC Fuses for AFE, 525–690 V AC

Model code[1]	Frame	Rated current I_L [A]	Number of fuses	Fuse size	Mersen part number[2]	Fuse U_n [V]	Fuse I_n [A]	Minimum Icp,mr [A]
iC7-60SA3x07-236AE00	AM10/ AR10	236	3	33	PC33UD69V550TF	690	550	3300
iC7-60SA3x07-300AE00		300			PC33UD69V550TF	690	550	3300
iC7-60SA3x07-334AE00		334			PC33UD69V550TF	690	550	3300
iC7-60SA3x07-380AE00		380			PC33UD69V630TF	690	630	4000
iC7-60SA3x07-425AE00	AM11/ AR11	425	3	33	PC33UD69V700TF	690	700	4800
iC7-60SA3x07-475AE00		475			PC33UD69V700TF	690	700	4800
iC7-60SA3x07-530AE00		530			PC33UD69V800TF	690	800	6100
iC7-60SA3x07-595AE00	2 x AM10/2 x AR10	595	6	33	PC33UD69V550TF	690	550	–
iC7-60SA3x07-670AE00		670			PC33UD69V550TF	690	550	–
iC7-60SA3x07-760AE00		760			PC33UD69V630TF	690	630	–
iC7-60SA3x07-850AE00	2 x AM11/2 x AR11	850	6	33	PC33UD69V630TF	690	630	–
iC7-60SA3x07-945AE00		945			PC33UD69V700TF	690	700	–
iC7-60SA3x07-1060AE00		1060			PC33UD69V800TF	690	800	–

Danfoss Drives Oy © 2026.09

Table 68: AC Fuses for AFE, 525–690 V AC - (continued)

Model code[1]	Frame	Rated current I_L [A]	Number of fuses	Fuse size	Mersen part number[2]	Fuse U_n [V]	Fuse I_n [A]	Minimum Icp,mr [A]
iC7-60SA3x07-1190AE00	3 x AM11/3 x AR11	1190	9	33	PC33UD69V630TF	690	630	–
iC7-60SA3x07-1325AE00		1325			PC33UD69V630TF	690	630	–
iC7-60SA3x07-1590AE00		1590			PC33UD69V800TF	690	800	–
iC7-60SA3x07-1780AE00	4 x AM11/4 x AR11	1780	12	33	PC33UD69V630TF	690	630	–
iC7-60SA3x07-2120AE00		2120			PC33UD69V800TF	690	800	–
iC7-60SA3x07-2380AE00	5 x AM11/5 x AR11	2380	15	33	PC33UD69V700TF	690	700	–
iC7-60SA3x07-2650AE00		2650			PC33UD69V800TF	690	800	–
iC7-60SA3x07-2970AE00	6 x AM11/6 x AR11	2970	18	33	PC33UD69V700TF	690	700	–
iC7-60SA3x07-3180AE00		3180			PC33UD69V800TF	690	800	–
iC7-60SA3x07-3350AE00	7 x AM11/7 x AR11	3350	21	33	PC33UD69V700TF	690	700	–
iC7-60SA3x07-3710AE00		3710			PC33UD69V800TF	690	800	–
iC7-60SA3x07-4000AE00	8 x AM11/8 x AR11	4000	24	33	PC33UD69V700TF	690	700	–
iC7-60SA3x07-4240AE00		4240			PC33UD69V800TF	690	800	–

1) Model codes starting with iC7-60SA3A07 or iC7-60SA3H07

2) Available as option +AJFX

10.5.9 DC Fuses for AFE, 640–1100 V DC

Table 69: DC Fuses for AFE, 640–1100 V DC

Model code[1]	Frame	Rated current I_L [A]	Number of fuses	Fuse size	Mersen part number[2]	Fuse U_n [V]	Fuse I_n [A]
iC7-60SA3x07-236AE00	AM10/ AR10	236	2	73	PC73UD13C500TF	1250	500
iC7-60SA3x07-300AE00		300			PC73UD13C500TF	1250	500
iC7-60SA3x07-334AE00		334			PC73UD13C700TF	1250	700
iC7-60SA3x07-380AE00		380			PC73UD13C700TF	1250	700
iC7-60SA3x07-425AE00	AM11/ AR11	425	2	73	PC73UD13C800TF	1250	800
iC7-60SA3x07-475AE00		475			PC73UD12C900TF	1200	900
iC7-60SA3x07-530AE00		530			PC73UD12C900TF	1200	900
iC7-60SA3x07-595AE00	2 x AM10/2 x AR10	595	4	73	PC73UD13C500TF	1250	500
iC7-60SA3x07-670AE00		670			PC73UD13C700TF	1250	700
iC7-60SA3x07-760AE00		760			PC73UD13C700TF	1250	700
iC7-60SA3x07-850AE00	2 x AM11/2 x AR11	850	4	73	PC73UD13C800TF	1250	800
iC7-60SA3x07-945AE00		945			PC73UD12C900TF	1200	900
iC7-60SA3x07-1060AE00		1060			PC73UD12C900TF	1200	900

Table 69: DC Fuses for AFE, 640–1100 V DC - (continued)

Model code[1]	Frame	Rated current I_L [A]	Number of fuses	Fuse size	Mersen part number[2]	Fuse U_n [V]	Fuse I_n [A]
iC7-60SA3x07-1190AE00	3 x AM11/3 x AR11	1190	6	73	PC73UD13C700TF	1250	700
iC7-60SA3x07-1325AE00		1325			PC73UD12C900TF	1200	900
iC7-60SA3x07-1590AE00		1590			PC73UD12C900TF	1200	900
iC7-60SA3x07-1780AE00	4 x AM11/4 x AR11	1780	8	73	PC73UD13C800TF	1250	800
iC7-60SA3x07-2120AE00		2120			PC73UD12C900TF	1200	900
iC7-60SA3x07-2380AE00	5 x AM11/5 x AR11	2380	10	73	PC73UD12C900TF	1200	900
iC7-60SA3x07-2650AE00		2650			PC73UD12C900TF	1200	900
iC7-60SA3x07-2970AE00	6 x AM11/6 x AR11	2970	12	73	PC73UD12C900TF	1200	900
iC7-60SA3x07-3180AE00		3180			PC73UD12C900TF	1200	900
iC7-60SA3x07-3350AE00	7 x AM11/7 x AR11	3350	14	73	PC73UD12C900TF	1200	900
iC7-60SA3x07-3710AE00		3710			PC73UD12C900TF	1200	900
iC7-60SA3x07-4000AE00	8 x AM11/8 x AR11	4000	16	73	PC73UD12C900TF	1200	900
iC7-60SA3x07-4240AE00		4240			PC73UD12C900TF	1200	900

1) Model codes starting with iC7-60SA3A07 or iC7-60SA3H07

2) Available as option +AKFX

10.5.10 DC Fuses for Inverter Modules, 465–740 V DC

Table 70: DC Fuses for Inverter Modules, 465–740 V DC

Model code	Frame	Rated current I_L [A]	Number of fuses	Fuse size	Mersen part number[1]	Fuse U_n [V]	Fuse I_n [A]
iC7-60SAIN05-385AE00	IM10/IR10	385	2	73	PC73UD13C630TF	1250	630
iC7-60SAIN05-480AE00		480			PC73UD13C800TF	1250	800
iC7-60SAIN05-590AE00		590			PC73UD10C1000TF	1000	1000
iC7-60SAIN05-658AE00	IM11/IR11	658	2	73	PC73UD90V13CTF	900	1250
iC7-60SAIN05-730AE00		730			PC73UD90V13CTF	900	1250
iC7-60SAIN05-820AE00		820			PC73UD85V14CTF	850	1400
iC7-60SAIN05-880AE00		880			PC73UD85V14CTF	850	1400
iC7-60SAIN05-1000E00	2 x IM10/2 x IR10	1000	4	73	PC73UD13C800TF	1250	800
iC7-60SAIN05-1100E00		1100			PC73UD10C1000TF	1000	1000
iC7-60SAIN05-1260E00	2 x IM11/2 x IR11	1260	4	73	PC73UD90V13CTF	900	1250
iC7-60SAIN05-1450E00		1450			PC73UD90V13CTF	900	1250
iC7-60SAIN05-1710E00		1710			PC73UD85V14CTF	850	1400

Danfoss Drives Oy © 2026.09

Table 70: DC Fuses for Inverter Modules, 465–740 V DC - (continued)

Model code	Frame	Rated current I_L [A]	Number of fuses	Fuse size	Mersen part number[1]	Fuse U_n [V]	Fuse I_n [A]
iC7-60SAIN05-1760E00	3 x IM11/3 x IR11	1760	6	73	PC73UD90V13CTF	900	1250
iC7-60SAIN05-1960E00		1960			PC73UD90V13CTF	900	1250
iC7-60SAIN05-2150E00		2150			PC73UD90V13CTF	900	1250
iC7-60SAIN05-2510E00		2510			PC73UD85V14CTF	850	1400
iC7-60SAIN05-2640E00	4 x IM11/4 x IR11	2640	8	73	PC73UD90V13CTF	900	1250
iC7-60SAIN05-2880E00		2880			PC73UD90V13CTF	900	1250
iC7-60SAIN05-3280E00		3280			PC73UD85V14CTF	850	1400
iC7-60SAIN05-3600E00	5 x IM11/5 x IR11	3600	10	73	PC73UD90V13CTF	900	1250
iC7-60SAIN05-4060E00		4060			PC73UD85V14CTF	850	1400
iC7-60SAIN05-4320E00	6 x IM11/6 x IR11	4320	12	73	PC73UD90V13CTF	900	1250
iC7-60SAIN05-4870E00		4870			PC73UD85V14CTF	850	1400

1) Available as option +AKFX

10.5.11 DC Fuses for Inverter Modules, 640–1100 V DC

Table 71: DC Fuses for Inverter Modules, 640–1100 V DC

Model code	Frame	Rated current I_L [A]	Number of fuses	Fuse size	Mersen part number[1]	Fuse U_n [V]	Fuse I_n [A]
iC7-60SAIN07-261AE00	IM10/IR10	261	2	73	PC73UD13C500TF	1250	500
iC7-60SAIN07-325AE00		325			PC73UD13C500TF	1250	500
iC7-60SAIN07-365AE00		365			PC73UD13C700TF	1250	700
iC7-60SAIN07-416AE00		416			PC73UD13C700TF	1250	700
iC7-60SAIN07-465AE00	IM11/IR11	465	2	73	PC73UD13C800TF	1250	800
iC7-60SAIN07-525AE00		525			PC73UD12C900TF	1200	900
iC7-60SAIN07-590AE00		590			PC73UD12C900TF	1200	900
iC7-60SAIN07-650AE00	2 x IM10/2 x IR10	650	4	73	PC73UD13C500TF	1250	500
iC7-60SAIN07-730AE00		730			PC73UD13C700TF	1250	700
iC7-60SAIN07-820AE00		820			PC73UD13C700TF	1250	700
iC7-60SAIN07-945AE00	2 x IM11/2 x IR11	945	4	73	PC73UD13C800TF	1250	800
iC7-60SAIN07-1060E00		1060			PC73UD12C900TF	1200	900
iC7-60SAIN07-1180E00		1180			PC73UD12C900TF	1200	900
iC7-60SAIN07-1300E00	3 x IM11/3 x IR11	1300	6	73	PC73UD13C700TF	1250	700
iC7-60SAIN07-1500E00		1500			PC73UD12C900TF	1200	900
iC7-60SAIN07-1770E00		1770			PC73UD12C900TF	1200	900
iC7-60SAIN07-1950E00	4 x IM11/4 x IR11	1950	8	73	PC73UD13C800TF	1250	800
iC7-60SAIN07-2360E00		2360			PC73UD12C900TF	1200	900

Table 71: DC Fuses for Inverter Modules, 640–1100 V DC - (continued)

Model code	Frame	Rated current I_L [A]	Number of fuses	Fuse size	Mersen part number[1]	Fuse U_n [V]	Fuse I_n [A]
iC7-60SAIN07-2600E00	5 x IM11/5 x IR11	2600	10	73	PC73UD12C900TF	1200	900
iC7-60SAIN07-2950E00		2950			PC73UD12C900TF	1200	900
iC7-60SAIN07-3250E00	6 x IM11/6 x IR11	3250	12	73	PC73UD12C900TF	1200	900
iC7-60SAIN07-3540E00		3540			PC73UD12C900TF	1200	900
iC7-60SAIN07-3800E00	7 x IM11/7 x IR11	3800	14	73	PC73UD12C900TF	1200	900
iC7-60SAIN07-4130E00		4130			PC73UD12C900TF	1200	900
iC7-60SAIN07-4400E00	8 x IM11/8 x IR11	4400	16	73	PC73UD12C900TF	1200	900
iC7-60SAIN07-4720E00		4720			PC73UD12C900TF	1200	900

1) Available as option +AKFX

10.6 Current Ratings

10.6.1 General Current Rating Information

The current rating tables show the ratings of the system modules at relevant voltage ratings. The power rating tables for the different products can be found with these links.

- 10.6.2 Current Ratings for NFE Module, 400 V AC
- 10.6.3 Current Ratings for NFE Module, UL 480 V AC
- 10.6.4 Current Ratings for NFE Module, 500 V AC
- 10.6.5 Current Ratings for NFE Module, 525 V AC
- 10.6.6 Current Ratings for NFE Module, UL 600 V AC
- 10.6.7 Current Ratings for NFE Module, 690 V AC
- 10.6.8 Current Ratings for Regenerative AFE Module, 400 V AC (465–650 V DC)
- 10.6.9 Current Ratings for Regenerative AFE Module, UL 480 V AC (650–740 V DC)
- 10.6.10 Current Ratings for Regenerative AFE Module, 500 V AC (650–740 V DC)
- 10.6.11 Current Ratings for Regenerative AFE Module, 525 V AC (640–900 V DC)
- 10.6.12 Current Ratings for Regenerative AFE Module, UL 600 V AC (640–980 V DC)
- 10.6.13 Current Ratings for Regenerative AFE Module, 690 V AC (690–1100 V DC)
- 10.6.14 Current Ratings for Low-harmonic AFE Module, 400 V AC (465–650 V DC)
- 10.6.15 Current Ratings for Low-harmonic AFE Module, UL 480 V AC (650–740 V DC)
- 10.6.16 Current Ratings for Low-harmonic AFE Module, 500 V AC (650–740 V DC)
- 10.6.17 Current Ratings for Low-harmonic AFE Module, 525 V AC (640–900 V DC)
- 10.6.18 Current Ratings for Low-harmonic AFE Module, UL 600 V AC (640–980 V DC)
- 10.6.19 Current Ratings for Low-harmonic AFE Module, 690 V AC (690–1100 V DC)
- 10.6.20 Current Ratings for Inverter Module, 400 V AC (465–650 V DC)
- 10.6.21 Current Ratings for Inverter Module, UL 460 V AC (650–740 V DC)
- 10.6.22 Current Ratings for Inverter Module, 500 V AC (650–740 V DC)
- 10.6.23 Current Ratings for Inverter Module, 525 V AC (640–900 V DC)

Danfoss Drives Oy © 2026.09

- 10.6.24 Current Ratings for Inverter Module, UL 575 V AC (640–980 V DC)
- 10.6.25 Current Ratings for Inverter Module, 690 V AC (690–1100 V DC)
- 10.6.26 Current Ratings for Grid Converter Module, 400 V AC (465–650 V DC)
- 10.6.27 Current Ratings for Grid Converter Module, 500 V AC (650–740 V DC)

Table 72: Abbreviations Used in the Rating Tables

Abbreviation	Description
I_N	Nominal current. If the process does not require any overloadability or the process does not include any load variation or margin for overloadability, the dimensioning can be done according to this current.
I_L	Nominal current with low overload (110%). Allows a +10% load variation for 1 minute every 5 minutes.
I_{L-OL}	Short-term low overload current
I_H	Nominal current with high overload (150%). Allows a +50% load variation for 1 minute every 5 minutes.
I_{H-OL}	Short-term high-overload current
I_{max}	Start current. Available for 3 s at start, then as long as the system module temperature allows. Relevant for inverter modules.
I_{S1}	Short-term current injection available for 1 s. Applicable for the grid converter control mode in grid forming in the event of short-circuit current feed.
I_{S2}	Short-term current injection available for 3 s. Applicable for the grid converter in the grid forming control mode in the event of short-circuit current feed.
I_{N-DC}	DC current
S_L	Apparent power at low overload
P_L	Output power at low overload
P_H	Output power at high overload

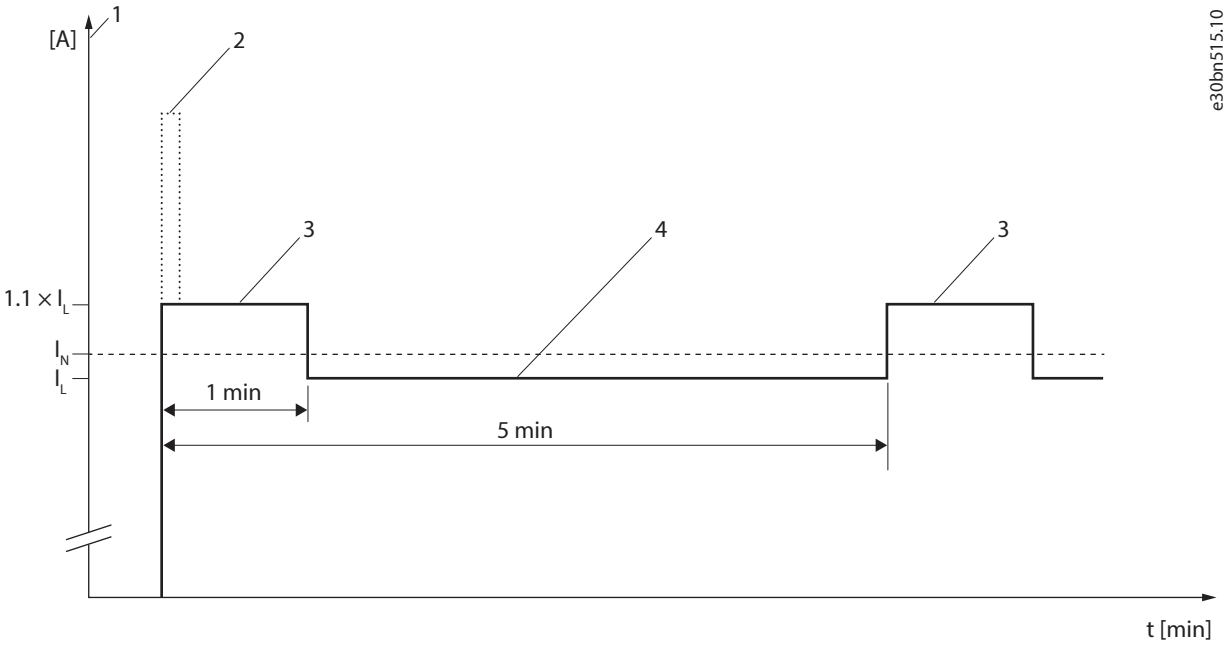

Figure 146: Low Overload in the System Modules

1	Drive current	2	Start current, I_{max}
3	Short-term low overload current, I_{L-OL}	4	Nominal current with low overload (110%), I_L

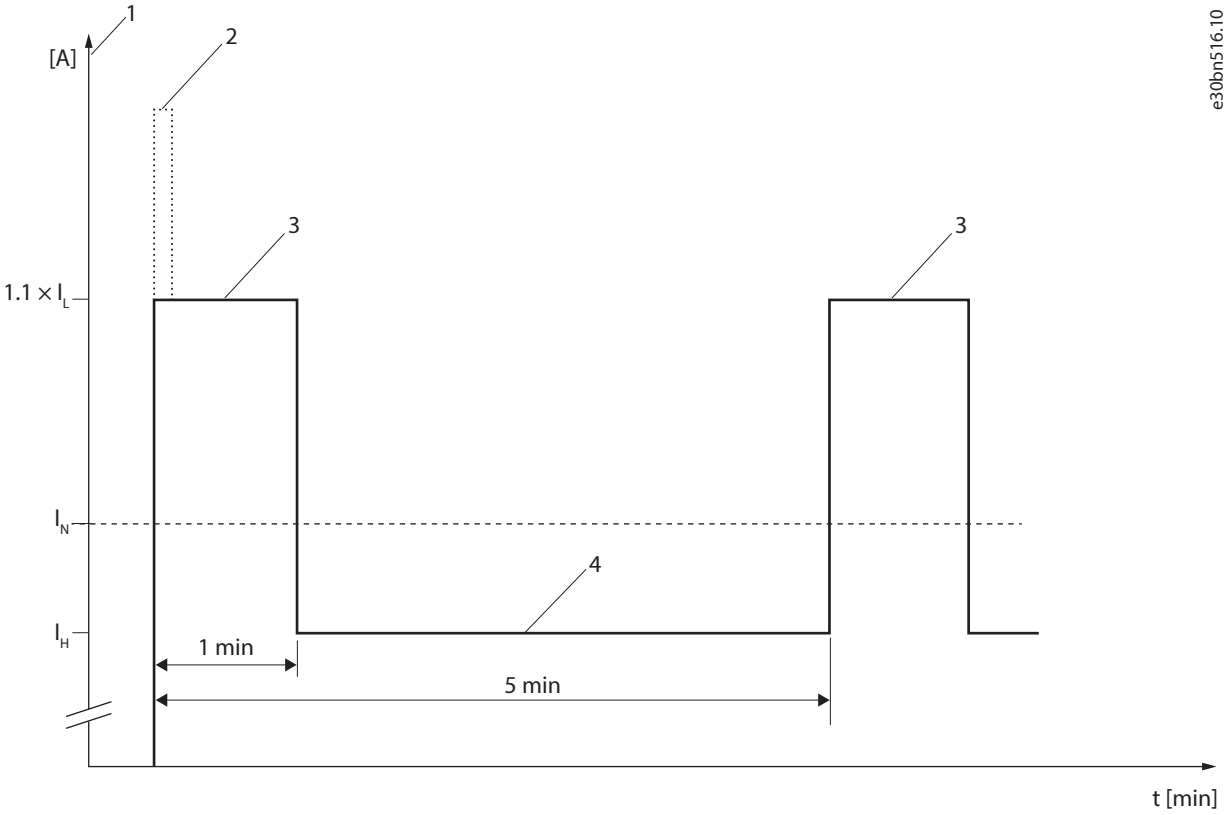

Figure 147: High Overload in the System Modules

1	Drive current	2	Start current, I_{max}
3	Short-term low overload current, I_{H-OL}	4	Nominal current with high overload (150%), I_H

10.6.2 Current Ratings for NFE Module, 400 V AC

Table 73: Current Ratings for NFE Module, 400 V AC

Model code	Frame	AC ratings				DC ratings		
		S_L [kVA]	I_N [A]	I_L [A]	I_H [A]	I_{N-DC} [A]	P_L [kW]	P_H [kW]
iC7-60SA3N05-730A	NR11	506	746	730	605	854	451	374
iC7-60SA3N05-869A	NR11	603	886	869	720	1013	537	445
iC7-60SA3N05-1094	NR11	758	1117	1094	908	1280	676	562
iC7-60SA3N05-1420	2xNR11	984	1450	1420	1180	1660	877	730
iC7-60SA3N05-1600	2xNR11	1109	1634	1600	1330	1871	989	822
iC7-60SA3N05-2090	2xNR11	1448	2134	2090	1730	2443	1291	1070
iC7-60SA3N05-2450	3xNR11	1698	2501	2450	2030	2863	1514	1255
iC7-60SA3N05-3130	3xNR11	2169	3196	3130	2600	3658	1934	1607
iC7-60SA3N05-4170	4xNR11	2890	4257	4170	3460	4873	2577	2139

Danfoss Drives Oy © 2026.09

Table 73: Current Ratings for NFE Module, 400 V AC - (continued)

Model code	Frame	AC ratings				DC ratings		
		S_L [kVA]	I_N [A]	I_L [A]	I_H [A]	I_{N-DC} [A]	P_L [kW]	P_H [kW]
iC7-60SA3N05-5210	5xNR11	3610	5319	5210	4330	6088	3219	2676
iC7-60SA3N05-6260	6xNR11	4338	6391	6260	5200	7313	3868	3214

10.6.3 Current Ratings for NFE Module, UL 480 V AC

Table 74: Current Ratings for NFE Module, UL 480 V AC

Model code	Frame	AC ratings				DC ratings		
		S_L [kVA]	I_N [A]	I_L [A]	I_H [A]	I_{N-DC} [A]	P_L [kW]	P_H[kW]
iC7-60SA3N05-730A	NR11	607	746	730	605	854	541	449
iC7-60SA3N05-869A	NR11	723	886	869	720	1014	644	534
iC7-60SA3N05-1094	NR11	910	1117	1094	908	1280	811	674
iC7-60SA3N05-1420	2xNR11	1181	1450	1420	1180	1659	1053	875
iC7-60SA3N05-1600	2xNR11	1331	1637	1600	1330	1874	1186	987
iC7-60SA3N05-2090	2xNR11	1738	2134	2090	1730	2442	1550	1283
iC7-60SA3N05-2450	3xNR11	2037	2501	2450	2030	2863	1817	1506
iC7-60SA3N05-3130	3xNR11	2603	3196	3130	2600	3658	2321	1928
iC7-60SA3N05-4170	4xNR11	3467	4257	4170	3460	4872	3092	2566
iC7-60SA3N05-5210	5xNR11	4332	5319	5210	4330	6087	3863	3211
iC7-60SA3N05-6260	6xNR11	5205	6391	6260	5200	7314	4642	3856

10.6.4 Current Ratings for NFE Module, 500 V AC

Table 75: Current Ratings for NFE Module, 500 V AC

Model code	Frame	AC ratings				DC ratings		
		S_L [kVA]	I_N [A]	I_L [A]	I_H [A]	I_{N-DC} [A]	P_L [kW]	P_H[kW]
iC7-60SA3N05-730A	NR11	633	746	730	605	854	564	468
iC7-60SA3N05-869A	NR11	753	886	869	720	1014	671	557
iC7-60SA3N05-1094	NR11	948	1117	1094	908	1279	845	702
iC7-60SA3N05-1420	2xNR11	1230	1447	1420	1180	1657	1097	912
iC7-60SA3N05-1600	2xNR11	1386	1634	1600	1330	1870	1236	1028
iC7-60SA3N05-2090	2xNR11	1810	2134	2090	1730	2442	1614	1337
iC7-60SA3N05-2450	3xNR11	2122	2501	2450	2030	2863	1892	1568
iC7-60SA3N05-3130	3xNR11	2711	3196	3130	2600	3657	2418	2009
iC7-60SA3N05-4170	4xNR11	3612	4257	4170	3460	4872	3221	2673
iC7-60SA3N05-5210	5xNR11	4512	5319	5210	4330	6086	4024	3345
iC7-60SA3N05-6260	6xNR11	5422	6391	6260	5200	7313	4835	4017

10.6.5 Current Ratings for NFE Module, 525 V AC

Table 76: Current Ratings for NFE Module, 525 V AC

Model code	Frame	AC ratings				DC ratings		
		S_L [kVA]	I_N [A]	I_L [A]	I_H [A]	I_{N-DC} [A]	P_L [kW]	P_H[kW]
iC7-60SA3N07-504A	NR11	459	515	504	420	590	409	341
iC7-60SA3N07-605A	NR11	551	618	605	500	707	491	406
iC7-60SA3N07-806A	NR11	733	823	806	670	943	654	544
iC7-60SA3N07-1007	NR11	916	1028	1007	840	1177	817	682
iC7-60SA3N07-1150	2xNR11	1046	1174	1150	950	1345	933	771
iC7-60SA3N07-1500	2xNR11	1364	1532	1500	1250	1753	1217	1014
iC7-60SA3N07-1960	2xNR11	1783	2001	1960	1630	2290	1590	1322
iC7-60SA3N07-2300	3xNR11	2092	2348	2300	1900	2688	1866	1541
iC7-60SA3N07-2900	3xNR11	2638	2961	2900	2400	3388	2352	1947
iC7-60SA3N07-3850	4xNR11	3501	3931	3850	3200	4499	3123	2596
iC7-60SA3N07-4800	5xNR11	4365	4900	4800	4000	5608	3893	3245
iC7-60SA3N07-5750	6xNR11	5229	5870	5750	4750	6718	4664	3853

10.6.6 Current Ratings for NFE Module, UL 600 V AC

Table 77: Current Ratings for NFE Module, UL 600 V AC

Model code	Frame	AC ratings				DC ratings		
		S_L [kVA]	I_N [A]	I_L [A]	I_H [A]	I_{N-DC} [A]	P_L [kW]	P_H[kW]
iC7-60SA3N07-504A	NR11	524	515	504	420	589	468	390
iC7-60SA3N07-605A	NR11	629	618	605	500	708	561	464
iC7-60SA3N07-806A	NR11	838	823	806	670	942	748	622
iC7-60SA3N07-1007	NR11	1047	1028	1007	840	1177	934	779
iC7-60SA3N07-1150	2xNR11	1196	1174	1150	950	1345	1066	881
iC7-60SA3N07-1500	2xNR11	1559	1532	1500	1250	1754	1391	1159
iC7-60SA3N07-1960	2xNR11	2037	2001	1960	1630	2291	1817	1511
iC7-60SA3N07-2300	3xNR11	2391	2348	2300	1900	2688	2132	1762
iC7-60SA3N07-2900	3xNR11	3014	2961	2900	2400	3388	2688	2225
iC7-60SA3N07-3850	4xNR11	4002	3931	3850	3200	4498	3569	2967
iC7-60SA3N07-4800	5xNR11	4989	4900	4800	4000	5608	4450	3708
iC7-60SA3N07-5750	6xNR11	5976	5870	5750	4750	6718	5330	4403

Danfoss Drives Oy © 2026.09

10.6.7 Current Ratings for NFE Module, 690 V AC

Table 78: Current Ratings for NFE Module, 690 V AC

Model code	Frame	AC ratings				DC ratings		
		S_L [kVA]	I_N [A]	I_L [A]	I_H [A]	I_{N-DC} [A]	P_L [kW]	P_H[kW]
iC7-60SA3N07-504A	NR11	603	515	504	420	590	538	448
iC7-60SA3N07-605A	NR11	724	618	605	500	708	645	533
iC7-60SA3N07-806A	NR11	964	823	806	670	942	860	715
iC7-60SA3N07-1007	NR11	1204	1028	1007	840	1177	1074	896
iC7-60SA3N07-1150	2xNR11	1375	1174	1150	950	1345	1226	1013
iC7-60SA3N07-1500	2xNR11	1793	1532	1500	1250	1754	1599	1333
iC7-60SA3N07-1960	2xNR11	2343	2001	1960	1630	2290	2090	1738
iC7-60SA3N07-2300	3xNR11	2749	2348	2300	1900	2688	2452	2026
iC7-60SA3N07-2900	3xNR11	3466	2961	2900	2400	3389	3092	2559
iC7-60SA3N07-3850	4xNR11	4602	3931	3850	3200	4499	4104	3411
iC7-60SA3N07-4800	5xNR11	5737	4900	4800	4000	5608	5117	4264
iC7-60SA3N07-5750	6xNR11	6872	5870	5750	4750	6718	6130	5064

10.6.8 Current Ratings for Regenerative AFE Module, 400 V AC (465–650 V DC)

Table 79: Current Ratings for Regenerative AFE Module, 400 V AC (at Nominal DC Voltage)

Model code	Frame	AC ratings				DC ratings		
		S_L [kVA]	I_N [A]	I_L [A]	I_H [A]	I_{N-DC} [A]	P_L [kW]	P_H [kW]
iC7-60SA3A05-317A	AM10/ AR10	220	324	317	263	371	216	179
iC7-60SA3A05-400A		278	409	400	327	469	272	223
iC7-60SA3A05-514A		357	525	514	426	602	349	290
iC7-60SA3A05-580A	AM11/ AR11	402	593	580	464	677	394	316
iC7-60SA3A05-650A		451	664	650	525	760	442	357
iC7-60SA3A05-730A		506	746	730	591	852	496	402
iC7-60SA3A05-816A		566	833	816	678	953	555	461
iC7-60SA3A05-920A	2 x AM10/ AR10	638	940	920	735	1075	625	500
iC7-60SA3A05-1030		714	1052	1030	850	1203	700	578
iC7-60SA3A05-1210	2 x AM11/ AR11	839	1236	1210	980	1413	822	666
iC7-60SA3A05-1410		977	1440	1410	1140	1647	958	775
iC7-60SA3A05-1630		1130	1664	1630	1360	1903	1107	924
iC7-60SA3A05-1860	3 x AM11/ AR11	1289	1899	1860	1575	2172	1263	1070
iC7-60SA3A05-2120		1469	2165	2120	1838	2475	1440	1248
iC7-60SA3A05-2450		1698	2501	2450	2030	2861	1664	1379
iC7-60SA3A05-2800	4 x AM11/ AR11	1940	2859	2800	2231	3268	1902	1515
iC7-60SA3A05-3270		2266	3338	3270	2710	3817	2221	1840

Table 79: Current Ratings for Regenerative AFE Module, 400 V AC (at Nominal DC Voltage) - (continued)

Model code	Frame	AC ratings				DC ratings		
		S_L [kVA]	I_N [A]	I_L [A]	I_H [A]	I_{N-DC} [A]	P_L [kW]	P_H [kW]
iC7-60SA3A05-3650	5 x AM11/ AR11	2529	3726	3650	2888	4260	2479	1961
iC7-60SA3A05-4080		2827	4165	4080	3390	4761	2771	2302
iC7-60SA3A05-4500	6 x AM11/ AR11	3118	4594	4500	3544	5251	3056	2407
iC7-60SA3A05-4900		3395	5002	4900	4070	5719	3327	2764

10.6.9 Current Ratings for Regenerative AFE Module, UL 480 V AC (650–740 V DC)

Table 80: Current Ratings for Regenerative AFE Module, UL 480 V AC (at Nominal DC Voltage)

Model code	Frame	AC ratings				DC ratings		
		S_L [kVA]	I_N [A]	I_L [A]	I_H [A]	I_{N-DC} [A]	P_L [kW]	P_H [kW]
iC7-60SA3A05-317A	AM10/ AR10	257	316	309	256	361	252	209
iC7-60SA3A05-400A		316	388	380	298	445	310	243
iC7-60SA3A05-514A		385	473	463	385	542	378	314
iC7-60SA3A05-580A	AM11/ AR11	433	531	520	424	608	424	346
iC7-60SA3A05-650A		487	598	585	470	684	477	383
iC7-60SA3A05-730A		541	664	650	511	759	530	417
iC7-60SA3A05-816A		608	747	731	607	853	596	495
iC7-60SA3A05-920A	2 x AM10/ AR10	686	843	825	639	964	673	521
iC7-60SA3A05-1030		774	950	930	770	1086	758	628
iC7-60SA3A05-1210	2 x AM11/ AR11	898	1103	1080	880	1262	880	717
iC7-60SA3A05-1410		1040	1276	1250	1030	1460	1019	840
iC7-60SA3A05-1630		1214	1491	1460	1210	1705	1190	986
iC7-60SA3A05-1860	3 x AM11/ AR11	1389	1705	1670	1363	1949	1361	1111
iC7-60SA3A05-2120		1588	1950	1910	1533	2230	1557	1250
iC7-60SA3A05-2450		1821	2236	2190	1820	2557	1785	1483
iC7-60SA3A05-2800	4 x AM11/ AR11	2087	2563	2510	1874	2930	2046	1527
iC7-60SA3A05-3270		2428	2981	2920	2430	3408	2380	1980
iC7-60SA3A05-3650	5 x AM11/ AR11	2736	3359	3290	2726	3840	2681	2222
iC7-60SA3A05-4080		3035	3726	3650	3030	4260	2974	2469
iC7-60SA3A05-4500	6 x AM11/ AR11	3334	4094	4010	3152	4681	3268	2569
iC7-60SA3A05-4900		3650	4482	4390	3640	5124	3577	2966

Danfoss Drives Oy © 2026.09

10.6.10 Current Ratings for Regenerative AFE Module, 500 V AC (650–740 V DC)

Table 81: Current Ratings for Regenerative AFE Module, 500 V AC (at Nominal DC Voltage)

Model code	Frame	AC ratings				DC ratings		
		S_L [kVA]	I_N [A]	I_L [A]	I_H [A]	I_{N-DC} [A]	P_L [kW]	P_H [kW]
iC7-60SA3A05-317A	AM10/ AR10	268	316	309	256	361	263	218
iC7-60SA3A05-400A		330	388	380	298	445	323	253
iC7-60SA3A05-514A		401	473	463	385	542	393	327
iC7-60SA3A05-580A	AM11/ AR11	451	531	520	424	608	442	360
iC7-60SA3A05-650A		507	598	585	470	683	497	399
iC7-60SA3A05-730A		563	664	650	511	760	552	434
iC7-60SA3A05-816A		634	747	731	607	854	621	516
iC7-60SA3A05-920A	2 x AM10/ AR10	715	843	825	639	963	701	543
iC7-60SA3A05-1030		806	950	930	770	1086	790	654
iC7-60SA3A05-1210	2 x AM11/ AR11	936	1103	1080	880	1261	917	747
iC7-60SA3A05-1410		1083	1276	1250	1030	1459	1061	875
iC7-60SA3A05-1630		1265	1491	1460	1210	1704	1240	1027
iC7-60SA3A05-1860	3 x AM11/ AR11	1447	1705	1670	1363	1949	1418	1157
iC7-60SA3A05-2120		1655	1950	1910	1533	2229	1622	1302
iC7-60SA3A05-2450		1897	2236	2190	1820	2557	1859	1545
iC7-60SA3A05-2800	4 x AM11/ AR11	2174	2563	2510	1874	2930	2131	1591
iC7-60SA3A05-3270		2529	2981	2920	2430	3408	2479	2063
iC7-60SA3A05-3650	5 x AM11/ AR11	2850	3359	3290	2726	3840	2793	2314
iC7-60SA3A05-4080		3161	3726	3650	3030	4260	3098	2572
iC7-60SA3A05-4500	6 x AM11/ AR11	3473	4094	4010	3152	4681	3404	2676
iC7-60SA3A05-4900		3802	4482	4390	3640	5124	3726	3090

10.6.11 Current Ratings for Regenerative AFE Module, 525 V AC (640–900 V DC)

Table 82: Current Ratings for Regenerative AFE Module, 525 V AC (at Nominal DC Voltage)

Model code	Frame	AC ratings				DC ratings		
		S_L [kVA]	I_N [A]	I_L [A]	I_H [A]	I_{N-DC} [A]	P_L [kW]	P_H [kW]
iC7-60SA3A07-236A	AM10/ AR10	215	241	236	196	276	211	175
iC7-60SA3A07-300A		273	307	300	249	351	268	222
iC7-60SA3A07-334A		304	341	334	278	390	298	248
iC7-60SA3A07-380A		346	388	380	316	444	339	282
iC7-60SA3A07-425A	AM11/ AR11	387	434	425	353	497	379	315
iC7-60SA3A07-475A		432	485	475	394	556	424	352
iC7-60SA3A07-530A		482	542	530	440	620	473	393

Table 82: Current Ratings for Regenerative AFE Module, 525 V AC (at Nominal DC Voltage) - (continued)

Model code	Frame	AC ratings				DC ratings		
		S_L [kVA]	I_N [A]	I_L [A]	I_H [A]	I_{N-DC} [A]	P_L [kW]	P_H [kW]
iC7-60SA3A07-595A	2 x AM10/ AR10	542	608	595	494	696	531	441
iC7-60SA3A07-670A		610	684	670	556	783	598	496
iC7-60SA3A07-760A		692	776	760	631	888	678	563
iC7-60SA3A07-850A	2 x AM11/ AR11	773	868	850	706	993	758	630
iC7-60SA3A07-945A		860	965	945	784	1104	843	699
iC7-60SA3A07-1060		964	1083	1060	863	1238	945	770
iC7-60SA3A07-1190	3 x AM11/ AR11	1083	1215	1190	988	1390	1061	881
iC7-60SA3A07-1325		1205	1353	1325	1100	1547	1181	981
iC7-60SA3A07-1590		1446	1624	1590	1295	1857	1417	1155
iC7-60SA3A07-1780	4 x AM11/ AR11	1619	1817	1780	1477	2078	1587	1317
iC7-60SA3A07-2120		1928	2165	2120	1725	2475	1890	1538
iC7-60SA3A07-2380	5 x AM11/ AR11	2165	2430	2380	1975	2777	2121	1761
iC7-60SA3A07-2650		2410	2706	2650	2160	3093	2362	1925
iC7-60SA3A07-2970	6 x AM11/ AR11	2701	3032	2970	2465	3466	2647	2197
iC7-60SA3A07-3180		2892	3247	3180	2590	3711	2834	2309
iC7-60SA3A07-3350	7 x AM11/ AR11	3047	3420	3350	2781	3910	2986	2479
iC7-60SA3A07-3710		3374	3788	3710	2988	4330	3307	2663
iC7-60SA3A07-4000	8 x AM11/ AR11	3638	4084	4000	3320	4668	3565	2959
iC7-60SA3A07-4240		3856	4329	4240	3403	4948	3779	3033

10.6.12 Current Ratings for Regenerative AFE Module, UL 600 V AC (640–980 V DC)

Table 83: Current Ratings for Regenerative AFE Module, UL 600 V AC (at Nominal DC Voltage)

Model code	Frame	AC ratings				DC ratings		
		S_L [kVA]	I_N [A]	I_L [A]	I_H [A]	I_{N-DC} [A]	P_L [kW]	P_H [kW]
iC7-60SA3A07-236A	AM10/ AR10	246	241	236	196	277	241	200
iC7-60SA3A07-300A		312	307	300	249	351	306	254
iC7-60SA3A07-334A		348	341	334	278	391	341	284
iC7-60SA3A07-380A		395	388	380	316	445	388	322
iC7-60SA3A07-425A	AM11/ AR11	442	434	425	353	497	433	360
iC7-60SA3A07-475A		494	485	475	394	555	484	402
iC7-60SA3A07-530A		551	542	530	440	619	540	449
iC7-60SA3A07-595A	2 x AM10/ AR10	619	608	595	494	695	606	504
iC7-60SA3A07-670A		697	684	670	556	783	683	567
iC7-60SA3A07-760A		790	776	760	631	888	775	643

Danfoss Drives Oy © 2026.09

Table 83: Current Ratings for Regenerative AFE Module, UL 600 V AC (at Nominal DC Voltage) - (continued)

Model code	Frame	AC ratings				DC ratings		
		S_L [kVA]	I_N [A]	I_L [A]	I_H [A]	I_{N-DC} [A]	P_L [kW]	P_H [kW]
iC7-60SA3A07-850A	2 x AM11/ AR11	884	868	850	706	993	866	720
iC7-60SA3A07-945A		983	965	945	784	1104	963	799
iC7-60SA3A07-1060		1102	1083	1060	863	1237	1080	879
iC7-60SA3A07-1190	3 x AM11/ AR11	1237	1215	1190	988	1390	1212	1007
iC7-60SA3A07-1325		1377	1353	1325	1100	1547	1350	1121
iC7-60SA3A07-1590		1653	1624	1590	1295	1856	1620	1319
iC7-60SA3A07-1780	4 x AM11/ AR11	1850	1817	1780	1477	2078	1813	1505
iC7-60SA3A07-2120		2204	2165	2120	1725	2474	2160	1757
iC7-60SA3A07-2380	5 x AM11/ AR11	2474	2430	2380	1975	2778	2424	2012
iC7-60SA3A07-2650		2754	2706	2650	2160	3093	2699	2200
iC7-60SA3A07-2970	6 x AM11/ AR11	3087	3032	2970	2465	3466	3025	2511
iC7-60SA3A07-3180		3305	3247	3180	2590	3711	3239	2638
iC7-60SA3A07-3350	7 x AM11/ AR11	3482	3420	3350	2781	3910	3412	2833
iC7-60SA3A07-3710		3856	3788	3710	2988	4329	3779	3044
iC7-60SA3A07-4000	8 x AM11/ AR11	4157	4084	4000	3320	4668	4074	3382
iC7-60SA3A07-4240		4407	4329	4240	3403	4948	4319	3466

10.6.13 Current Ratings for Regenerative AFE Module, 690 V AC (690–1100 V DC)

Table 84: Current Ratings for Regenerative AFE Module, 690 V AC (at Nominal DC Voltage)

Model code	Frame	AC ratings				DC ratings		
		S_L [kVA]	I_N [A]	I_L [A]	I_H [A]	I_{N-DC} [A]	P_L [kW]	P_H [kW]
iC7-60SA3A07-236A	AM10/ AR10	283	241	236	196	277	277	230
iC7-60SA3A07-300A		359	307	300	249	351	352	292
iC7-60SA3A07-334A		400	341	334	278	391	392	326
iC7-60SA3A07-380A		455	388	380	316	445	446	371
iC7-60SA3A07-425A	AM11/ AR11	508	434	425	353	497	498	414
iC7-60SA3A07-475A		568	485	475	394	555	557	462
iC7-60SA3A07-530A		634	542	530	440	619	621	516
iC7-60SA3A07-595A	2 x AM10/ AR10	712	608	595	494	695	697	579
iC7-60SA3A07-670A		801	684	670	556	783	785	652
iC7-60SA3A07-760A		909	776	760	631	888	891	740
iC7-60SA3A07-850A	2 x AM11/ AR11	1016	868	850	706	993	996	827
iC7-60SA3A07-945A		1130	965	945	784	1103	1107	919
iC7-60SA3A07-1060		1267	1083	1060	863	1238	1242	1011

Table 84: Current Ratings for Regenerative AFE Module, 690 V AC (at Nominal DC Voltage) - (continued)

Model code	Frame	AC ratings				DC ratings		
		S_L [kVA]	I_N [A]	I_L [A]	I_H [A]	I_{N-DC} [A]	P_L [kW]	P_H [kW]
iC7-60SA3A07-1190	3 x AM11/ AR11	1423	1215	1190	988	1389	1394	1158
iC7-60SA3A07-1325		1584	1353	1325	1100	1547	1552	1289
iC7-60SA3A07-1590		1901	1624	1590	1295	1856	1863	1517
iC7-60SA3A07-1780	4 x AM11/ AR11	2128	1817	1780	1477	2078	2085	1730
iC7-60SA3A07-2120		2534	2165	2120	1725	2475	2483	2021
iC7-60SA3A07-2380	5 x AM11/ AR11	2845	2430	2380	1975	2778	2788	2314
iC7-60SA3A07-2650		3168	2706	2650	2160	3093	3104	2530
iC7-60SA3A07-2970	6 x AM11/ AR11	3550	3032	2970	2465	3466	3479	2888
iC7-60SA3A07-3180		3801	3247	3180	2590	3711	3725	3034
iC7-60SA3A07-3350	7 x AM11/ AR11	4004	3420	3350	2781	3910	3924	3258
iC7-60SA3A07-3710		4434	3788	3710	2988	4330	4346	3500
iC7-60SA3A07-4000	8 x AM11/ AR11	4781	4084	4000	3320	4668	4685	3889
iC7-60SA3A07-4240		5068	4329	4240	3403	4949	4966	3986

10.6.14 Current Ratings for Low-harmonic AFE Module, 400 V AC (465–650 V DC)

Table 85: Current Ratings for Low-harmonic AFE Module, 400 V AC (at Nominal DC Voltage)

Model code	Frame	AC ratings				DC ratings		
		S_L [kVA]	I_N [A]	I_L [A]	I_H [A]	I_{N-DC} [A]	P_L [kW]	P_H [kW]
iC7-60SA3H05-317A	AM10/ AR10	220	324	317	263	371	216	179
iC7-60SA3H05-400A		278	409	400	327	469	272	223
iC7-60SA3H05-514A		357	525	514	426	602	349	290
iC7-60SA3H05-580A	AM11/ AR11	402	593	580	464	677	394	316
iC7-60SA3H05-650A		451	664	650	525	760	442	357
iC7-60SA3H05-730A		506	746	730	591	852	496	402
iC7-60SA3H05-816A		566	833	816	678	953	555	461
iC7-60SA3H05-920A	2 x AM10/ AR10	638	940	920	735	1075	625	500
iC7-60SA3H05-1030		714	1052	1030	850	1203	700	578
iC7-60SA3H05-1210	2 x AM11/ AR11	839	1236	1210	980	1413	822	666
iC7-60SA3H05-1410		977	1440	1410	1140	1647	958	775
iC7-60SA3H05-1630		1130	1664	1630	1360	1903	1107	924
iC7-60SA3H05-1860	3 x AM11/ AR11	1289	1899	1860	1575	2172	1263	1070
iC7-60SA3H05-2120		1469	2165	2120	1838	2475	1440	1248
iC7-60SA3H05-2450		1698	2501	2450	2030	2861	1664	1379
iC7-60SA3H05-2800	4 x AM11/ AR11	1940	2859	2800	2231	3268	1902	1515
iC7-60SA3H05-3270		2266	3338	3270	2710	3817	2221	1840

Danfoss Drives Oy © 2026.09

Table 85: Current Ratings for Low-harmonic AFE Module, 400 V AC (at Nominal DC Voltage) - (continued)

Model code	Frame	AC ratings				DC ratings		
		S_L [kVA]	I_N [A]	I_L [A]	I_H [A]	I_{N-DC} [A]	P_L [kW]	P_H [kW]
iC7-60SA3H05-3650	5 x AM11/ AR11	2529	3726	3650	2888	4260	2479	1961
iC7-60SA3H05-4080		2827	4165	4080	3390	4761	2771	2302
iC7-60SA3H05-4500	6 x AM11/ AR11	3118	4594	4500	3544	5251	3056	2407
iC7-60SA3H05-4900		3395	5002	4900	4070	5719	3327	2764

10.6.15 Current Ratings for Low-harmonic AFE Module, UL 480 V AC (650–740 V DC)

Table 86: Current Ratings for Low-harmonic AFE Module, UL 480 V AC (at Nominal DC Voltage)

Model code	Frame	AC ratings				DC ratings		
		S_L [kVA]	I_N [A]	I_L [A]	I_H [A]	I_{N-DC} [A]	P_L [kW]	P_H [kW]
iC7-60SA3H05-317A	AM10/ AR10	257	316	309	256	361	252	209
iC7-60SA3H05-400A		316	388	380	298	445	310	243
iC7-60SA3H05-514A		385	473	463	385	542	378	314
iC7-60SA3H05-580A	AM11/ AR11	433	531	520	424	608	424	346
iC7-60SA3H05-650A		487	598	585	470	684	477	383
iC7-60SA3H05-730A		541	664	650	511	759	530	417
iC7-60SA3H05-816A		608	747	731	607	853	596	495
iC7-60SA3H05-920A	2 x AM10/ AR10	686	843	825	639	964	673	521
iC7-60SA3H05-1030		774	950	930	770	1086	758	628
iC7-60SA3H05-1210	2 x AM11/ AR11	898	1103	1080	880	1262	880	717
iC7-60SA3H05-1410		1040	1276	1250	1030	1460	1019	840
iC7-60SA3H05-1630		1214	1491	1460	1210	1705	1190	986
iC7-60SA3H05-1860	3 x AM11/ AR11	1389	1705	1670	1363	1949	1361	1111
iC7-60SA3H05-2120		1588	1950	1910	1533	2230	1557	1250
iC7-60SA3H05-2450		1821	2236	2190	1820	2557	1785	1483
iC7-60SA3H05-2800	4 x AM11/ AR11	2087	2563	2510	1874	2930	2046	1527
iC7-60SA3H05-3270		2428	2981	2920	2430	3408	2380	1980
iC7-60SA3H05-3650	5 x AM11/ AR11	2736	3359	3290	2726	3840	2681	2222
iC7-60SA3H05-4080		3035	3726	3650	3030	4260	2974	2469
iC7-60SA3H05-4500	6 x AM11/ AR11	3334	4094	4010	3152	4681	3268	2569
iC7-60SA3H05-4900		3650	4482	4390	3640	5124	3577	2966

10.6.16 Current Ratings for Low-harmonic AFE Module, 500 V AC (650–740 V DC)

Table 87: Current Ratings for Low-harmonic AFE Module, 500 V AC (at Nominal DC Voltage)

Model code	Frame	AC ratings				DC ratings		
		S_L [kVA]	I_N [A]	I_L [A]	I_H [A]	I_{N-DC} [A]	P_L [kW]	P_H [kW]
iC7-60SA3H05-317A	AM10/ AR10	268	316	309	256	361	263	218
iC7-60SA3H05-400A		330	388	380	298	445	323	253
iC7-60SA3H05-514A		401	473	463	385	542	393	327
iC7-60SA3H05-580A	AM11/ AR11	451	531	520	424	608	442	360
iC7-60SA3H05-650A		507	598	585	470	683	497	399
iC7-60SA3H05-730A		563	664	650	511	760	552	434
iC7-60SA3H05-816A		634	747	731	607	854	621	516
iC7-60SA3H05-920A	2 x AM10/ AR10	715	843	825	639	963	701	543
iC7-60SA3H05-1030		806	950	930	770	1086	790	654
iC7-60SA3H05-1210	2 x AM11/ AR11	936	1103	1080	880	1261	917	747
iC7-60SA3H05-1410		1083	1276	1250	1030	1459	1061	875
iC7-60SA3H05-1630		1265	1491	1460	1210	1704	1240	1027
iC7-60SA3H05-1860	3 x AM11/ AR11	1447	1705	1670	1363	1949	1418	1157
iC7-60SA3H05-2120		1655	1950	1910	1533	2229	1622	1302
iC7-60SA3H05-2450		1897	2236	2190	1820	2557	1859	1545
iC7-60SA3H05-2800	4 x AM11/ AR11	2174	2563	2510	1874	2930	2131	1591
iC7-60SA3H05-3270		2529	2981	2920	2430	3408	2479	2063
iC7-60SA3H05-3650	5 x AM11/ AR11	2850	3359	3290	2726	3840	2793	2314
iC7-60SA3H05-4080		3161	3726	3650	3030	4260	3098	2572
iC7-60SA3H05-4500	6 x AM11/ AR11	3473	4094	4010	3152	4681	3404	2676
iC7-60SA3H05-4900		3802	4482	4390	3640	5124	3726	3090

10.6.17 Current Ratings for Low-harmonic AFE Module, 525 V AC (640–900 V DC)

Table 88: Current Ratings for Low-harmonic AFE Module, 525 V AC (at Nominal DC Voltage)

Model code	Frame	AC ratings				DC ratings		
		S_L [kVA]	I_N [A]	I_L [A]	I_H [A]	I_{N-DC} [A]	P_L [kW]	P_H [kW]
iC7-60SA3H07-236A	AM10/ AR10	215	241	236	196	276	211	175
iC7-60SA3H07-300A		273	307	300	249	351	268	222
iC7-60SA3H07-334A		304	341	334	278	390	298	248
iC7-60SA3H07-380A		346	388	380	316	444	339	282
iC7-60SA3H07-425A	AM11/ AR11	387	434	425	353	497	379	315
iC7-60SA3H07-475A		432	485	475	394	556	424	352
iC7-60SA3H07-530A		482	542	530	440	620	473	393

Danfoss Drives Oy © 2026.09

Table 88: Current Ratings for Low-harmonic AFE Module, 525 V AC (at Nominal DC Voltage) - (continued)

Model code	Frame	AC ratings				DC ratings		
		S_L [kVA]	I_N [A]	I_L [A]	I_H [A]	I_{N-DC} [A]	P_L [kW]	P_H [kW]
iC7-60SA3H07-595A	2 x AM10/ AR10	542	608	595	494	696	531	441
iC7-60SA3H07-670A		610	684	670	556	783	598	496
iC7-60SA3H07-760A		692	776	760	631	888	678	563
iC7-60SA3H07-850A	2 x AM11/ AR11	773	868	850	706	993	758	630
iC7-60SA3H07-945A		860	965	945	784	1104	843	699
iC7-60SA3H07-1060		964	1083	1060	863	1238	945	770
iC7-60SA3H07-1190	3 x AM11/ AR11	1083	1215	1190	988	1390	1061	881
iC7-60SA3H07-1325		1205	1353	1325	1100	1547	1181	981
iC7-60SA3H07-1590		1446	1624	1590	1295	1857	1417	1155
iC7-60SA3H07-1780	4 x AM11/ AR11	1619	1817	1780	1477	2078	1587	1317
iC7-60SA3H07-2120		1928	2165	2120	1725	2475	1890	1538
iC7-60SA3H07-2380	5 x AM11/ AR11	2165	2430	2380	1975	2777	2121	1761
iC7-60SA3H07-2650		2410	2706	2650	2160	3093	2362	1925
iC7-60SA3H07-2970	6 x AM11/ AR11	2701	3032	2970	2465	3466	2647	2197
iC7-60SA3H07-3180		2892	3247	3180	2590	3711	2834	2309
iC7-60SA3H07-3350	7 x AM11/ AR11	3047	3420	3350	2781	3910	2986	2479
iC7-60SA3H07-3710		3374	3788	3710	2988	4330	3307	2663
iC7-60SA3H07-4000	8 x AM11/ AR11	3638	4084	4000	3320	4668	3565	2959
iC7-60SA3H07-4240		3856	4329	4240	3403	4948	3779	3033

10.6.18 Current Ratings for Low-harmonic AFE Module, UL 600 V AC (640–980 V DC)

Table 89: Current Ratings for Low-harmonic AFE Module, UL 600 V AC (at Nominal DC Voltage)

Model code	Frame	AC ratings				DC ratings		
		S_L [kVA]	I_N [A]	I_L [A]	I_H [A]	I_{N-DC} [A]	P_L [kW]	P_H [kW]
iC7-60SA3H07-236A	AM10/ AR10	246	241	236	196	277	241	200
iC7-60SA3H07-300A		312	307	300	249	351	306	254
iC7-60SA3H07-334A		348	341	334	278	391	341	284
iC7-60SA3H07-380A		395	388	380	316	445	388	322
iC7-60SA3H07-425A	AM11/ AR11	442	434	425	353	497	433	360
iC7-60SA3H07-475A		494	485	475	394	555	484	402
iC7-60SA3H07-530A		551	542	530	440	619	540	449
iC7-60SA3H07-595A	2 x AM10/ AR10	619	608	595	494	695	606	504
iC7-60SA3H07-670A		697	684	670	556	783	683	567
iC7-60SA3H07-760A		790	776	760	631	888	775	643

Table 89: Current Ratings for Low-harmonic AFE Module, UL 600 V AC (at Nominal DC Voltage) - (continued)

Model code	Frame	AC ratings				DC ratings		
		S_L [kVA]	I_N [A]	I_L [A]	I_H [A]	I_{N-DC} [A]	P_L [kW]	P_H [kW]
iC7-60SA3H07-850A	2 x AM11/ AR11	884	868	850	706	993	866	720
iC7-60SA3H07-945A		983	965	945	784	1104	963	799
iC7-60SA3H07-1060		1102	1083	1060	863	1237	1080	879
iC7-60SA3H07-1190	3 x AM11/ AR11	1237	1215	1190	988	1390	1212	1007
iC7-60SA3H07-1325		1377	1353	1325	1100	1547	1350	1121
iC7-60SA3H07-1590		1653	1624	1590	1295	1856	1620	1319
iC7-60SA3H07-1780	4 x AM11/ AR11	1850	1817	1780	1477	2078	1813	1505
iC7-60SA3H07-2120		2204	2165	2120	1725	2474	2160	1757
iC7-60SA3H07-2380	5 x AM11/ AR11	2474	2430	2380	1975	2778	2424	2012
iC7-60SA3H07-2650		2754	2706	2650	2160	3093	2699	2200
iC7-60SA3H07-2970	6 x AM11/ AR11	3087	3032	2970	2465	3466	3025	2511
iC7-60SA3H07-3180		3305	3247	3180	2590	3711	3239	2638
iC7-60SA3H07-3350	7 x AM11/ AR11	3482	3420	3350	2781	3910	3412	2833
iC7-60SA3H07-3710		3856	3788	3710	2988	4329	3779	3044
iC7-60SA3H07-4000	8 x AM11/ AR11	4157	4084	4000	3320	4668	4074	3382
iC7-60SA3H07-4240		4407	4329	4240	3403	4948	4319	3466

10.6.19 Current Ratings for Low-harmonic AFE Module, 690 V AC (690–1100 V DC)

Table 90: Current Ratings for Low-harmonic AFE Module, 690 V AC (at Nominal DC Voltage)

Model code	Frame	AC ratings				DC ratings		
		S_L [kVA]	I_N [A]	I_L [A]	I_H [A]	I_{N-DC} [A]	P_L [kW]	P_H [kW]
iC7-60SA3H07-236A	AM10/ AR10	283	241	236	196	277	277	230
iC7-60SA3H07-300A		359	307	300	249	351	352	292
iC7-60SA3H07-334A		400	341	334	278	391	392	326
iC7-60SA3H07-380A		455	388	380	316	445	446	371
iC7-60SA3H07-425A	AM11/ AR11	508	434	425	353	497	498	414
iC7-60SA3H07-475A		568	485	475	394	555	557	462
iC7-60SA3H07-530A		634	542	530	440	619	621	516
iC7-60SA3H07-595A	2 x AM10/ AR10	712	608	595	494	695	697	579
iC7-60SA3H07-670A		801	684	670	556	783	785	652
iC7-60SA3H07-760A		909	776	760	631	888	891	740
iC7-60SA3H07-850A	2 x AM11/ AR11	1016	868	850	706	993	996	827
iC7-60SA3H07-945A		1130	965	945	784	1103	1107	919
iC7-60SA3H07-1060		1267	1083	1060	863	1238	1242	1011

Danfoss Drives Oy © 2026.09

Table 90: Current Ratings for Low-harmonic AFE Module, 690 V AC (at Nominal DC Voltage) - (continued)

Model code	Frame	AC ratings				DC ratings		
		S_L [kVA]	I_N [A]	I_L [A]	I_H [A]	I_{N-DC} [A]	P_L [kW]	P_H [kW]
iC7-60SA3H07-1190	3 x AM11/ AR11	1423	1215	1190	988	1389	1394	1158
iC7-60SA3H07-1325		1584	1353	1325	1100	1547	1552	1289
iC7-60SA3H07-1590		1901	1624	1590	1295	1856	1863	1517
iC7-60SA3H07-1780	4 x AM11/ AR11	2128	1817	1780	1477	2078	2085	1730
iC7-60SA3H07-2120		2534	2165	2120	1725	2475	2483	2021
iC7-60SA3H07-2380	5 x AM11/ AR11	2845	2430	2380	1975	2778	2788	2314
iC7-60SA3H07-2650		3168	2706	2650	2160	3093	3104	2530
iC7-60SA3H07-2970	6 x AM11/ AR11	3550	3032	2970	2465	3466	3479	2888
iC7-60SA3H07-3180		3801	3247	3180	2590	3711	3725	3034
iC7-60SA3H07-3350	7 x AM11/ AR11	4004	3420	3350	2781	3910	3924	3258
iC7-60SA3H07-3710		4434	3788	3710	2988	4330	4346	3500
iC7-60SA3H07-4000	8 x AM11/ AR11	4781	4084	4000	3320	4668	4685	3889
iC7-60SA3H07-4240		5068	4329	4240	3403	4949	4966	3986

10.6.20 Current Ratings for Inverter Module, 400 V AC (465–650 V DC)

Table 91: Current Ratings for Inverter Module, 400 V AC (at Nominal DC Voltage)

Model code	Frame	AC current						Typical motor power, 400 V AC		DC current
		I_N [A]	$I_{L(1/5)}$ [A]	$I_{L\text{-}OL\ (1/5)}$ [A]	$I_{H\ (1/5)}$ [A]	$I_{H\text{-}OL\ (1/5)}$ [A]	I_{max} [A]	P_L [kW]	P_H [kW]	I_{N-DC} [A]
iC7-60SAIN05-385A	IM/IR10	394	385	424	320	480	544	200	160	410
iC7-60SAIN05-480A	IM/IR10	490	480	528	399	599	679	250	200	510
iC7-60SAIN05-590A	IM/IR10	603	590	649	490	735	833	315	250	641
iC7-60SAIN05-658A	IM/IR11	672	658	724	547	821	930	355	250	721
iC7-60SAIN05-730A	IM/IR11	746	730	803	606	909	1031	400	315	813
iC7-60SAIN05-820A	IM/IR11	838	820	902	681	1022	1158	450	355	913
iC7-60SAIN05-880A	IM/IR11	899	880	968	731	1097	1243	500	400	1015
iC7-60SAIN05-1000	2xIM/ IR10	1021	1000	1100	830	1245	1411	560	450	1138
iC7-60SAIN05-1100	2xIM/ IR10	1123	1100	1210	913	1370	1553	630	500	1280
iC7-60SAIN05-1260	2xIM/ IR11	1287	1260	1386	1050	1575	1785	710	560	1441
iC7-60SAIN05-1450	2xIM/ IR11	1481	1450	1595	1210	1815	2057	800	630	1625
iC7-60SAIN05-1710[(1)]	2xIM/ IR11	1746	1710	1881	1420	2130	2414	900	710	1826

Table 91: Current Ratings for Inverter Module, 400 V AC (at Nominal DC Voltage) - (continued)

Model code	Frame	AC current						Typical motor power, 400 V AC		DC current
		I_N [A]	$I_{L(1/5)}$ [A]	$I_{L\text{-}OL\ (1/5)}$ [A]	$I_{H\ (1/5)}$ [A]	$I_{H\text{-}OL\ (1/5)}$ [A]	I_{max} [A]	P_L [kW]	P_H [kW]	$I_{N\text{-}DC}$ [A]
iC7-60SAIN05-1760	3xIM/ IR11	1797	1760	1936	1470	2205	2499	1000	800	2030
iC7-60SAIN05-1960	3xIM/ IR11	2001	1960	2156	1630	2445	2771	1100	900	2234
iC7-60SAIN05-2150	3xIM/ IR11	2195	2150	2365	1790	2685	3043	1200	1000	2436
iC7-60SAIN05-2510(1)	3xIM/ IR11	2563	2510	2761	2090	3135	3553	1400	1100	2841
iC7-60SAIN05-2640	4xIM/ IR11	2695	2640	2904	2200	3300	3740	1500	1200	3045
iC7-60SAIN05-2880	4xIM/ IR11	2940	2880	3168	2400	3600	4080	1600	1300	3247
iC7-60SAIN05-3280(1)	4xIM/ IR11	3349	3280	3608	2730	4095	4641	1800	1500	3652
iC7-60SAIN05-3600	5xIM/ IR11	3675	3600	3960	2990	4485	5083	2000	1600	4058
iC7-60SAIN05-4060	5xIM/ IR11	4145	4060	4466	3370	5055	5729	2200	1800	4465
iC7-60SAIN05-4320	6xIM/ IR11	4410	4320	4752	3590	5385	6103	2400	1900	4871
iC7-60SAIN05-4870	6xIM/ IR11	4972	4870	5357	4050	6075	6885	2700	2200	5478

1) For high overload ratings, derating starts from 35 °C (95 °F) in combinations with +AEU1, +AEU2.

10.6.21 Current Ratings for Inverter Module, UL 460 V AC (650–740 V DC)

Table 92: Current Ratings for Inverter Module, UL 460 V AC (at Nominal DC Voltage)

Model code	Frame	AC current						Typical motor power, 460 V AC		DC current
		I_N [A]	$I_{L(1/5)}$ [A]	$I_{L\text{-}OL\ (1/5)}$ [A]	I_H [A]	$I_{H\text{-}OL\ (1/5)}$	I_{max} [A]	P_L [Hp]	P_H [Hp]	$I_{N\text{-}DC}$ [A]
iC7-60SAIN05-385A	IM/IR10	394	385	424	320	480	544	300	250	380
iC7-60SAIN05-480A		490	480	528	399	599	679	350	300	443
iC7-60SAIN05-590A		543	531	585	441	662	750	450	350	570
iC7-60SAIN05-658A	IM/IR11	603	590	649	490	735	833	500	350	632
iC7-60SAIN05-730A		672	658	724	547	821	930	550	450	695
iC7-60SAIN05-820A		746	730	803	606	909	1031	600	500	758
iC7-60SAIN05-880A		838	820	902	681	1022	1158	700	550	883

Danfoss Drives Oy © 2026.09

Table 92: Current Ratings for Inverter Module, UL 460 V AC (at Nominal DC Voltage) - (continued)

Model code	Frame	AC current						Typical motor power, 460 V AC		DC current
		I_N [A]	$I_{L(1/5)}$ [A]	$I_{L\text{-}OL\ (1/5)}$ [A]	I_H [A]	$I_{H\text{-}OL\ (1/5)}$	I_{max} [A]	P_L [Hp]	P_H [Hp]	$I_{N\text{-}DC}$ [A]
iC7-60SAIN05-1000	2xIM/ IR10	940	920	1012	764	1146	1299	750	550	948
iC7-60SAIN05-1100		1052	1030	1133	855	1283	1454	850	650	1073
iC7-60SAIN05-1260	2xIM/ IR11	1174	1150	1265	960	1440	1632	950	750	1200
iC7-60SAIN05-1450		1328	1300	1430	1080	1620	1836	1100	850	1389
iC7-60SAIN05-1710		1603	1570	1727	1310	1965	2227	1300	1100	1641
iC7-60SAIN05-1760	3xIM/ IR11	1787	1750	1925	1470	2205	2499	1500	1200	1892
iC7-60SAIN05-1960		1940	1900	2090	1580	2370	2686	1600	1300	2021
iC7-60SAIN05-2150		2083	2040	2244	1700	2550	2890	1700	1300	2146
iC7-60SAIN05-2510		2389	2340	2574	1950	2925	3315	1900	1600	2397
iC7-60SAIN05-2640	4xIM/ IR11	2532	2480	2728	2060	3090	3502	2100	1700	2650
iC7-60SAIN05-2880		2685	2630	2893	2190	3285	3723	2200	1800	2775
iC7-60SAIN05-3280		3114	3050	3355	2540	3810	4318	2500	2100	3155
iC7-60SAIN05-3600	5xIM/ IR11	3573	3500	3850	2910	4365	4947	2900	2300	3658
iC7-60SAIN05-4060		3859	3780	4158	3140	4710	5338	3200	2500	4036
iC7-60SAIN05-4320	6xIM/ IR11	4176	4090	4499	3400	5100	5780	3400	2700	4289
iC7-60SAIN05-4870		4625	4530	4983	3760	5640	6392	3700	2900	4667

10.6.22 Current Ratings for Inverter Module, 500 V AC (650–740 V DC)

Table 93: Current Ratings for Inverter Module, 500 V AC (at Nominal DC Voltage)

Model code	Frame	AC current						Typical motor power, 500 V AC		DC current
		I_N [A]	$I_{L(1/5)}$ [A]	$I_{L\text{-}OL\ (1/5)}$ [A]	$I_{H\ (1/5)}$ [A]	$I_{H\text{-}OL\ (1/5)}$ [A]	I_{max} [A]	P_L [kW]	P_H [kW]	$I_{N\text{-}DC}$ [A]
iC7-60SAIN05-385A	IM/IR10	394	385	424	320	480	544	250	200	408
iC7-60SAIN05-480A		490	480	528	399	599	679	315	250	513
iC7-60SAIN05-590A		543	531	585	441	662	750	355	250	577
iC7-60SAIN05-658A	IM/IR11	603	590	649	490	735	833	400	315	651
iC7-60SAIN05-730A		672	658	724	547	821	930	450	355	731
iC7-60SAIN05-820A		746	730	803	606	909	1031	500	400	812
iC7-60SAIN05-880A		838	820	902	681	1022	1158	560	450	910
iC7-60SAIN05-1000	2xIM/ IR10	940	920	1012	764	1146	1299	630	500	1024
iC7-60SAIN05-1100		1052	1030	1133	855	1283	1454	710	560	1153

Table 93: Current Ratings for Inverter Module, 500 V AC (at Nominal DC Voltage) - (continued)

Model code	Frame	AC current						Typical motor power, 500 V AC		DC current
		I_N [A]	$I_{L(1/5)}$ [A]	$I_{L\text{-}OL\ (1/5)}$ [A]	$I_{H\ (1/5)}$ [A]	$I_{H\text{-}OL\ (1/5)}$ [A]	I_{max} [A]	P_L [kW]	P_H [kW]	$I_{N\text{-}DC}$ [A]
iC7-60SAIN05-1260	2xIM/ IR11	1174	1150	1265	960	1440	1632	800	630	1300
iC7-60SAIN05-1450		1328	1300	1430	1080	1620	1836	900	710	1461
iC7-60SAIN05-1710		1603	1570	1727	1310	1965	2227	1100	900	1787
iC7-60SAIN05-1760	3xIM/ IR11	1787	1750	1925	1470	2205	2499	1200	1000	1949
iC7-60SAIN05-1960		1940	1900	2090	1580	2370	2686	1300	1100	2112
iC7-60SAIN05-2150		2083	2040	2244	1700	2550	2890	1400	1100	2273
iC7-60SAIN05-2510		2389	2340	2574	1950	2925	3315	1600	1300	2598
iC7-60SAIN05-2640	4xIM/ IR11	2532	2480	2728	2060	3090	3502	1700	1400	2760
iC7-60SAIN05-2880		2685	2630	2893	2190	3285	3723	1800	1500	2922
iC7-60SAIN05-3280		3114	3050	3355	2540	3810	4318	2000	1700	3246
iC7-60SAIN05-3600	5xIM/ IR11	3573	3500	3850	2910	4365	4947	2400	1900	3897
iC7-60SAIN05-4060		3859	3780	4158	3140	4710	5338	2600	2100	4221
iC7-60SAIN05-4320	6xIM/ IR11	4176	4090	4499	3400	5100	5780	2800	2300	4546
iC7-60SAIN05-4870		4625	4530	4983	3760	5640	6392	3100	2600	5033

10.6.23 Current Ratings for Inverter Module, 525 V AC (640–900 V DC)

Table 94: Current Ratings for Inverter Module, 525 V AC (at Nominal DC Voltage)

Model code	Frame	AC current						Typical motor power, 525 V AC		DC current
		I_N [A]	$I_{L(1/5)}$ [A]	$I_{L\text{-}OL\ (1/5)}$ [A]	$I_{H\ (1/5)}$ [A]	$I_{H\text{-}OL\ (1/5)}$ [A]	I_{max} [A]	P_L [kW]	P_H [kW]	$I_{N\text{-}DC}$ [A]
iC7-60SAIN07-261A	IM/IR10	267	261	288	217	326	369	160	132	249
iC7-60SAIN07-325A		332	325	358	270	405	459	200	160	311
iC7-60SAIN07-365A		373	365	402	300	450	510	250	200	387
iC7-60SAIN07-416A		425	416	458	345	518	587	315	250	489
iC7-60SAIN07-465A	IM/IR11	475	465	512	386	579	657	315	250	489
iC7-60SAIN07-525A		536	525	578	436	654	742	355	315	549
iC7-60SAIN07-590A		603	590	649	490	735	833	400	355	620
iC7-60SAIN07-650A	2xIM/ IR10	664	650	715	540	810	918	450	400	696
iC7-60SAIN07-730A		746	730	803	605	908	1029	500	450	774
iC7-60SAIN07-820A		838	820	902	680	1020	1156	560	500	867
iC7-60SAIN07-945A	2xIM/ IR11	965	945	1040	785	1178	1335	710	560	1098
iC7-60SAIN07-1060		1083	1060	1166	880	1320	1496	800	630	1238
iC7-60SAIN07-1180		1205	1180	1298	980	1470	1666	900	710	1392

Danfoss Drives Oy © 2026.09

Table 94: Current Ratings for Inverter Module, 525 V AC (at Nominal DC Voltage) - (continued)

Model code	Frame	AC current						Typical motor power, 525 V AC		DC current
		I_N [A]	$I_{L(1/5)}$ [A]	$I_{L\text{-}OL\ (1/5)}$ [A]	$I_{H\ (1/5)}$ [A]	$I_{H\text{-}OL\ (1/5)}$ [A]	I_{max} [A]	P_L [kW]	P_H [kW]	$I_{N\text{-}DC}$ [A]
iC7-60SAIN07-1300	3xIM/ IR11	1328	1300	1430	1080	1620	1836	1000	800	1547
iC7-60SAIN07-1500		1532	1500	1650	1245	1868	2117	1100	900	1702
iC7-60SAIN07-1770		1807	1770	1947	1470	2205	2499	1300	1100	2011
iC7-60SAIN07-1950	4xIM/ IR11	1991	1950	2145	1620	2430	2754	1400	1200	2165
iC7-60SAIN07-2360		2410	2360	2596	1960	2940	3332	1700	1400	2629
iC7-60SAIN07-2600	5xIM/ IR11	2655	2600	2860	2160	3240	3672	1900	1600	2938
iC7-60SAIN07-2950		3012	2950	3245	2450	3675	4165	2200	1800	3402
iC7-60SAIN07-3250	6xIM/ IR11	3318	3250	3575	2700	4050	4590	2400	2000	3711
iC7-60SAIN07-3540		3614	3540	3894	2940	4410	4998	2600	2200	4020
iC7-60SAIN07-3800	7xIM/ IR11	3879	3800	4180	3150	4725	5355	2800	2300	4329
iC7-60SAIN07-4130		4216	4130	4543	3430	5145	5831	3100	2500	4793
iC7-60SAIN07-4400	8xIM/ IR11	4492	4400	4840	3650	5475	6205	3300	2700	5102
iC7-60SAIN07-4720		4819	4720	5192	3920	5880	6664	3500	2900	5411

10.6.24 Current Ratings for Inverter Module, UL 575 V AC (640–980 V DC)

Table 95: Current Ratings for Inverter Module, UL 575 V AC (at Nominal DC Voltage)

Model code	Frame	AC current						Typical motor power, 575 V AC		DC current
		I_N [A]	$I_{L(1/5)}$ [A]	$I_{L\text{-}OL\ (1/5)}$ [A]	$I_{H\ (1/5)}$ [A]	$I_{H\text{-}OL\ (1/5)}$ [A]	I_{max} [A]	P_L [Hp]	P_H [Hp]	$I_{N\text{-}DC}$ [A]
iC7-60SAIN07-261A	IM/IR10	267	261	288	217	326	369	250	200	255
iC7-60SAIN07-325A		332	325	358	270	405	459	300	250	304
iC7-60SAIN07-365A		373	365	402	300	450	510	350	300	354
iC7-60SAIN07-416A		425	416	458	345	518	587	400	350	404
iC7-60SAIN07-465A	IM/IR11	475	465	512	386	579	657	450	400	456
iC7-60SAIN07-525A		536	525	578	436	654	742	500	450	505
iC7-60SAIN07-590A		603	590	649	490	735	833	600	500	607
iC7-60SAIN07-650A	2xIM/ IR10	664	650	715	540	810	918	650	550	657
iC7-60SAIN07-730A		746	730	803	605	908	1029	750	600	759
iC7-60SAIN07-820A		838	820	902	680	1020	1156	800	700	809
iC7-60SAIN07-945A	2xIM/ IR11	965	945	1040	785	1178	1335	950	800	960
iC7-60SAIN07-1060		1083	1060	1166	880	1320	1496	1100	900	1112
iC7-60SAIN07-1180		1205	1180	1298	980	1470	1666	1200	1000	1212

Table 95: Current Ratings for Inverter Module, UL 575 V AC (at Nominal DC Voltage) - (continued)

Model code	Frame	AC current						Typical motor power, 575 V AC		DC current
		I_N [A]	$I_{L(1/5)}$ [A]	$I_{L\text{-}OL\ (1/5)}$ [A]	$I_{H\ (1/5)}$ [A]	$I_{H\text{-}OL\ (1/5)}$ [A]	I_{max} [A]	P_L [Hp]	P_H [Hp]	$I_{N\text{-}DC}$ [A]
iC7-60SAIN07-1300	3xIM/ IR11	1328	1300	1430	1080	1620	1836	1300	1100	1313
iC7-60SAIN07-1500		1532	1500	1650	1245	1868	2117	1500	1300	1514
iC7-60SAIN07-1770		1807	1770	1947	1470	2205	2499	1800	1500	1818
iC7-60SAIN07-1950	4xIM/ IR11	1991	1950	2145	1620	2430	2754	2000	1700	2019
iC7-60SAIN07-2360		2410	2360	2596	1960	2940	3332	2400	2000	2421
iC7-60SAIN07-2600	5xIM/ IR11	2655	2600	2860	2160	3240	3672	2700	2200	2725
iC7-60SAIN07-2950		3012	2950	3245	2450	3675	4165	3100	2600	3129
iC7-60SAIN07-3250	6xIM/ IR11	3318	3250	3575	2700	4050	4590	3400	2800	3431
iC7-60SAIN07-3540		3614	3540	3894	2940	4410	4998	3700	3100	3734
iC7-60SAIN07-3800	7xIM/ IR11	3879	3800	4180	3150	4725	5355	4000	3300	4036
iC7-60SAIN07-4130		4216	4130	4543	3430	5145	5831	4300	3600	4340
iC7-60SAIN07-4400	8xIM/ IR11	4492	4400	4840	3650	5475	6205	4600	3800	4642
iC7-60SAIN07-4720		4819	4720	5192	3920	5880	6664	5000	4100	5046

10.6.25 Current Ratings for Inverter Module, 690 V AC (690–1100 V DC)

Table 96: Current Ratings for Inverter Module, 690 V AC (at Nominal DC Voltage)

Model code	Frame	AC current						Typical motor power, 690 V AC		DC current
		I_N [A]	$I_{L(1/5)}$ [A]	$I_{L\text{-}OL\ (1/5)}$ [A]	$I_{H\ (1/5)}$ [A]	$I_{H\text{-}OL\ (1/5)}$ [A]	I_{max} [A]	P_L [kW]	P_H [kW]	$I_{N\text{-}DC}$ [A]
iC7-60SAIN07-261A	IM/IR10	267	261	288	217	326	369	250	200	296
iC7-60SAIN07-325A		332	325	358	270	405	459	315	250	372
iC7-60SAIN07-365A		373	365	402	300	450	510	355	250	418
iC7-60SAIN07-416A		425	416	458	345	518	587	400	315	472
iC7-60SAIN07-465A	IM/IR11	475	465	512	386	579	657	450	355	530
iC7-60SAIN07-525A		536	525	578	436	654	742	500	400	589
iC7-60SAIN07-590A		603	590	649	490	735	833	560	450	660
iC7-60SAIN07-650A	2xIM/ IR10	664	650	715	540	810	918	630	500	742
iC7-60SAIN07-730A		746	730	803	605	908	1029	710	560	836
iC7-60SAIN07-820A		838	820	902	680	1020	1156	800	630	942
iC7-60SAIN07-945A	2xIM/ IR11	965	945	1040	785	1178	1335	900	710	1059
iC7-60SAIN07-1060		1083	1060	1166	880	1320	1496	1000	800	1177
iC7-60SAIN07-1180		1205	1180	1298	980	1470	1666	1100	900	1295

Danfoss Drives Oy © 2026.09

Table 96: Current Ratings for Inverter Module, 690 V AC (at Nominal DC Voltage) - (continued)

Model code	Frame	AC current						Typical motor power, 690 V AC		DC current
		I_N [A]	$I_{L(1/5)}$ [A]	$I_{L\text{-}OL\ (1/5)}$ [A]	$I_{H\ (1/5)}$ [A]	$I_{H\text{-}OL\ (1/5)}$ [A]	I_{max} [A]	P_L [kW]	P_H [kW]	$I_{N\text{-}DC}$ [A]
iC7-60SAIN07-1300	3xIM/ IR11	1328	1300	1430	1080	1620	1836	1200	1000	1412
iC7-60SAIN07-1500		1532	1500	1650	1245	1868	2117	1400	1200	1647
iC7-60SAIN07-1770		1807	1770	1947	1470	2205	2499	1600	1400	1882
iC7-60SAIN07-1950	4xIM/ IR11	1991	1950	2145	1620	2430	2754	1800	1500	2118
iC7-60SAIN07-2360		2410	2360	2596	1960	2940	3332	2200	1800	2589
iC7-60SAIN07-2600	5xIM/ IR11	2655	2600	2860	2160	3240	3672	2400	2000	2824
iC7-60SAIN07-2950		3012	2950	3245	2450	3675	4165	2800	2300	3294
iC7-60SAIN07-3250	6xIM/ IR11	3318	3250	3575	2700	4050	4590	3000	2600	3529
iC7-60SAIN07-3540		3614	3540	3894	2940	4410	4998	3300	2800	3882
iC7-60SAIN07-3800	7xIM/ IR11	3879	3800	4180	3150	4725	5355	3600	3000	4235
iC7-60SAIN07-4130		4216	4130	4543	3430	5145	5831	3900	3300	4588
iC7-60SAIN07-4400	8xIM/ IR11	4492	4400	4840	3650	5475	6205	4200	3500	4941
iC7-60SAIN07-4720		4819	4720	5192	3920	5880	6664	4500	3700	5293

10.6.26 Current Ratings for Grid Converter Module, 400 V AC (465–650 V DC)

Table 97: Current Ratings for Grid Converter Module, 400 V AC (at Nominal DC Voltage)

Model code	Frame	AC ratings					DC ratings		
		S_L [kVA]	I_N [A]	I_L [A]	I_H [A]	I_{S2} [A] (1)	$I_{N\text{-}DC}$ [A]	$P_{L\text{-}DC}$ [kW]	$P_{H\text{-}DC}$ [kW]
iC7-60SAGC05-317A	AM10/ AR10	220	324	317	263	492	371	216	179
iC7-60SAGC05-400A		278	409	400	327	620	469	272	223
iC7-60SAGC05-514A		357	525	514	426	797	602	349	290
iC7-60SAGC05-580A	AM11/ AR11	402	593	580	464	899	677	394	316
iC7-60SAGC05-650A		451	664	650	525	1008	760	442	357
iC7-60SAGC05-730A		506	746	730	591	1132	852	496	402
iC7-60SAGC05-816A		566	833	816	678	1265	953	555	461
iC7-60SAGC05-920A	2 x AM10/ AR10	638	940	920	735	1426	1075	625	500
iC7-60SAGC05-1030		714	1052	1030	850	1597	1203	700	578
iC7-60SAGC05-1210	2 x AM11/ AR11	839	1236	1210	980	1876	1413	822	666
iC7-60SAGC05-1410		977	1440	1410	1140	2186	1647	958	775
iC7-60SAGC05-1630		1130	1664	1630	1360	2527	1903	1107	924
iC7-60SAGC05-1860	3 x AM11/ AR11	1289	1899	1860	1575	2883	2172	1263	1070
iC7-60SAGC05-2120		1469	2165	2120	1838	3286	2475	1440	1248
iC7-60SAGC05-2450		1698	2501	2450	2030	3798	2861	1664	1379

Table 97: Current Ratings for Grid Converter Module, 400 V AC (at Nominal DC Voltage) - (continued)

Model code	Frame	AC ratings					DC ratings		
		S_L [kVA]	I_N [A]	I_L [A]	I_H [A]	I_{S2} [1] [A]	I_{N-DC} [A]	P_{L-DC} [kW]	P_{H-DC} [kW]
iC7-60SAGC05-2800	4 x AM11/ AR11	1940	2859	2800	2231	4340	3268	1902	1515
iC7-60SAGC05-3270		2266	3338	3270	2710	5069	3817	2221	1840
iC7-60SAGC05-3650	5 x AM11/ AR11	2529	3726	3650	2888	5658	4260	2479	1961
iC7-60SAGC05-4080		2827	4165	4080	3390	6324	4761	2771	2302
iC7-60SAGC05-4500	6 x AM11/ AR11	3118	4594	4500	3544	6975	5251	3056	2407
iC7-60SAGC05-4900		3395	5002	4900	4070	7595	5719	3327	2764

1) Pending validation.

10.6.27 Current Ratings for Grid Converter Module, 500 V AC (650–740 V DC)

Table 98: Current Ratings for Grid Converter Module, 500 V AC (at Nominal DC Voltage)

Model code	Frame	AC ratings					DC ratings		
		S_L [kVA]	I_N [A]	I_L [A]	I_H [A]	I_{S2} [1] [A]	I_{N-DC} [A]	P_{L-DC} [kW]	P_{H-DC} [kW]
iC7-60SAGC05-317A	AM10/ AR10	268	316	309	256	479	361	263	218
iC7-60SAGC05-400A		330	388	380	298	589	445	323	253
iC7-60SAGC05-514A		401	473	463	385	718	542	393	327
iC7-60SAGC05-580A	AM11/ AR11	451	531	520	424	806	608	442	360
iC7-60SAGC05-650A		507	598	585	470	907	683	497	399
iC7-60SAGC05-730A		563	664	650	511	1008	760	552	434
iC7-60SAGC05-816A		634	747	731	607	1134	854	621	516
iC7-60SAGC05-920A	2 x AM10/ AR10	715	843	825	639	1279	963	701	543
iC7-60SAGC05-1030		806	950	930	770	1442	1086	790	654
iC7-60SAGC05-1210	2 x AM11/ AR11	936	1103	1080	880	1674	1261	917	747
iC7-60SAGC05-1410		1083	1276	1250	1030	1938	1459	1061	875
iC7-60SAGC05-1630		1265	1491	1460	1210	2263	1704	1240	1027
iC7-60SAGC05-1860	3 x AM11/ AR11	1447	1705	1670	1363	2589	1949	1418	1157
iC7-60SAGC05-2120		1655	1950	1910	1533	2961	2229	1622	1302
iC7-60SAGC05-2450		1897	2236	2190	1820	3395	2557	1859	1545
iC7-60SAGC05-2800	4 x AM11/ AR11	2174	2563	2510	1874	3891	2930	2131	1591
iC7-60SAGC05-3270		2529	2981	2920	2430	4526	3408	2479	2063
iC7-60SAGC05-3650	5 x AM11/ AR11	2850	3359	3290	2726	5100	3840	2793	2314
iC7-60SAGC05-4080		3161	3726	3650	3030	5658	4260	3098	2572
iC7-60SAGC05-4500	6 x AM11/ AR11	3473	4094	4010	3152	6216	4681	3404	2676
iC7-60SAGC05-4900		3802	4482	4390	3640	6805	5124	3726	3090

1) Pending validation.

Danfoss Drives Oy © 2026.09

10.7 Output Current Derating

10.7.1 Derating the Output Current, 380–500 V AC

The output current must be derated in the following cases.

- When the ambient temperature is above 40 °C (104 °F).
- When the installation altitude is higher than 1000 m (3300 ft).
- For inverter modules, derating is required when the switching frequency is higher than 3 kHz. The default switching frequency for AFE/GC modules is 4 kHz.

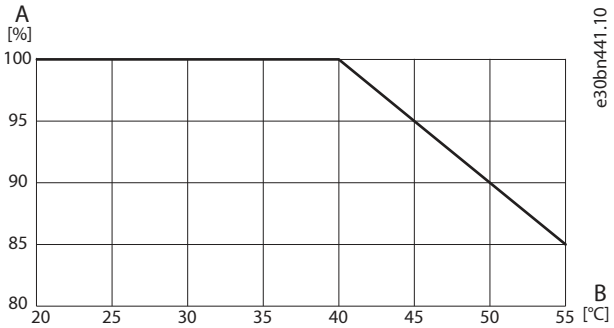

Figure 148: Output Current Derating vs. Ambient Temperature, 380–500 V AC

A	Allowed output current	B	Ambient temperature

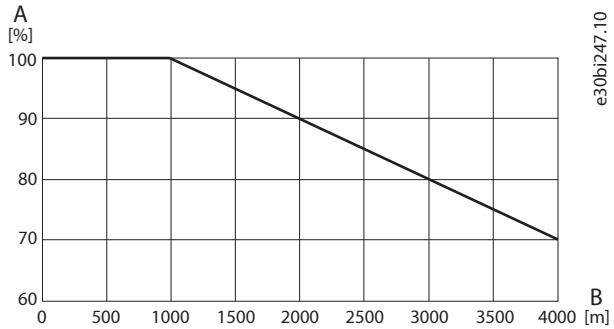

Figure 149: Output Current Derating vs. Installation Altitude, 380–500 V AC

A	Allowed output current	B	Installation altitude, above sea level



Figure 150: Output Current Derating vs. Switching Frequency (Inverter), 380–500 V AC

A	Allowed output current	B	Switching frequency

10.7.2 Derating the Output Current, 525–690 V AC

The output current must be derated in the following cases.

- When the ambient temperature is above 40 °C (104 °F).
- When the installation altitude is higher than 1000 m (3300 ft).
- For inverter modules, derating is required when the switching frequency is higher than 2 kHz. The default switching frequency for AFE/GC modules is 3 kHz.

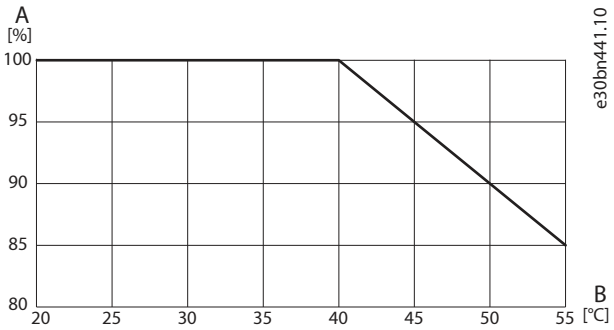

Figure 151: Output Current Derating vs. Ambient Temperature, 525–690 V AC

A	Allowed output current	B	Ambient temperature

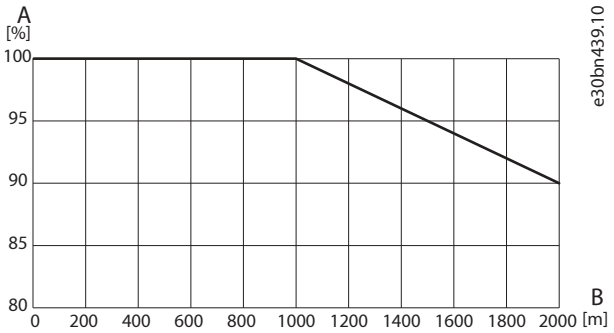

Figure 152: Output Current Derating vs. Installation Altitude, 525–690 V AC

A	Allowed output current	B	Installation altitude, above sea level

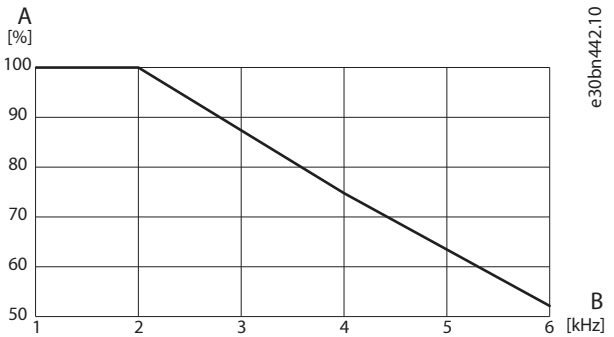

Figure 153: Output Current Derating vs. Switching Frequency (Inverter), 525–690 V AC

A	Allowed output current	B	Switching frequency

Danfoss Drives Oy © 2026.09

10.8 Power Losses

10.8.1 General Power Loss Information

The power loss values have been calculated in worst-case scenarios. Use MyDrive® Energy for case-specific power losses.

The power loss tables for the air-cooled system modules can be found with these links.

- 10.8.2 Power Losses of NFE Modules without Options, 380–500 V
- 10.8.3 Power Losses of NFE Modules without Options, 525–690 V
- 10.8.4 Power Losses of AFE Modules without Options, 380–440 V
- 10.8.5 Power Losses of AFE Modules without Options, 440–500 V
- 10.8.6 Power Losses of AFE Modules without Options, 525–690 V
- 10.8.7 Power Losses of LCL Filter at Drive Nominal Parameters, 380–500 V
- 10.8.8 Power Losses of LCL Filter at Drive Nominal Parameters, 525–690 V
- 10.8.9 Power Losses of Inverter Modules without Options, 380–440 V
- 10.8.10 Power Losses of Inverter Modules with dU/dt Filter, 150 m (492 ft) Motor Cables, 380–440 V
- 10.8.11 Power Losses of Inverter Modules without Options, 440–500 V
- 10.8.12 Power Losses of Inverter Modules with dU/dt Filter, 150 m (492 ft) Motor Cables, 440–500 V
- 10.8.13 Power Losses of Inverter Modules without Options, 525–690 V
- 10.8.14 Power Losses of Inverter Modules with dU/dt Filter, 150 m (492 ft) Motor Cables, 525-690 V

10.8.2 Power Losses of NFE Modules without Options, 380–500 V

The specifications for the values in the table:

- Non-regenerative front-end module
- 380–500 V AC
- Losses calculated with 500 V AC and 675 V DC
- With AC choke

Table 99: Power Losses of NFE Modules without Options, 380–500 V

Model code	Frame	Rated current I_L[A]	Total power losses [kW]	Main cooling channel power losses [kW]	AC choke losses [kW]
iC7-60SA3N05-730A	NR11	730	3.4	3.2	1.04
iC7-60SA3N05-869A		869	3.0	2.8	1.23
iC7-60SA3N05-1094		1094	3.6	3.3	1.44
iC7-60SA3N05-1420	2 x NR11	1420	4.5	4.2	1.96
iC7-60SA3N05-1600		1600	5.3	4.9	2.02
iC7-60SA3N05-2090		2090	6.8	6.2	2.60
iC7-60SA3N05-2450	3 x NR11	2450	8.2	7.6	3.19
iC7-60SA3N05-3130		3130	10.3	9.3	3.88
iC7-60SA3N05-4170	4 x NR11	4170	13.7	12.4	5.17
iC7-60SA3N05-5210	5 x NR11	5210	17.1	15.5	6.46
iC7-60SA3N05-6260	6 x NR11	6260	20.5	18.6	7.76

10.8.3 Power Losses of NFE Modules without Options, 525–690 V

The specifications for the values in the table:

- Non-regenerative front-end module
- 525–690 V AC
- Losses calculated with 690 V AC and 932 V DC
- With AC choke

Table 100: Power Losses of NFE Modules without Options, 525–690 V

Model code	Frame	Rated current I_L[A]	Total power losses [kW]	Main cooling channel power losses [kW]	AC choke losses [kW]
iC7-60SA3N07-504A	NR11	504	1.9	1.8	0.5
iC7-60SA3N07-605A		605	2.6	2.4	0.7
iC7-60SA3N07-806A		806	4.1	3.9	1.3
iC7-60SA3N07-1007		1007	4.7	4.4	1.3
iC7-60SA3N07-1150	2 x NR11	1150	4.9	4.6	1.4
iC7-60SA3N07-1500		1500	7.2	6.8	2.2
iC7-60SA3N07-1960		1960	9.0	8.5	2.3
iC7-60SA3N07-2300	3 x NR11	2300	11.1	10.6	3.5
iC7-60SA3N07-2900		2900	13.2	12.5	3.4
iC7-60SA3N07-3850	4 x NR11	3850	17.5	16.5	4.5
iC7-60SA3N07-4800	5 x NR11	4800	21.8	20.5	5.6
iC7-60SA3N07-5750	6 x NR11	5750	26.1	24.5	6.7

10.8.4 Power Losses of AFE Modules without Options, 380–440 V

The specifications for the values in the table:

- Active front-end module
- 380–440 V AC (465–740 V DC)
- Losses calculated with 400 V AC and 594 V DC
- No input filters
- Switching frequency 4 kHz
- CMRPWM modulator

Table 101: Power Losses of AFE Modules without Options, 380–440 V

Model code[(1)]	Frame	Rated current I_L [A]	4 kHz	
			Total power losses [kW]	Main cooling channel power losses [kW]
iC7-60SA3x05-317A	AM10	317	2.1	1.9
iC7-60SA3x05-400A		400	2.7	2.5
iC7-60SA3x05-514A		514	3.9	3.5

Danfoss Drives Oy © 2026.09

Table 101: Power Losses of AFE Modules without Options, 380–440 V - (continued)

Model code[1]	Frame	Rated current I_L [A]	4 kHz	
			Total power losses [kW]	Main cooling channel power losses [kW]
iC7-60SA3x05-580A	AM11	580	3.8	3.5
iC7-60SA3x05-650A		650	4.5	4.1
iC7-60SA3x05-730A		730	5.2	4.8
iC7-60SA3x05-816A		816	6.2	5.7
iC7-60SA3x05-920A	2 x AM10	920	6.6	5.9
iC7-60SA3x05-1030		1030	7.8	7.1
iC7-60SA3x05-1210	2 x AM11	1210	8.1	7.4
iC7-60SA3x05-1410		1410	10.0	9.1
iC7-60SA3x05-1630		1630	12.4	11.3
iC7-60SA3x05-1860	3 x AM11	1860	12.7	11.5
iC7-60SA3x05-2120		2120	15.1	13.7
iC7-60SA3x05-2450		2450	18.7	17.0
iC7-60SA3x05-2800	4 x AM11	2800	19.9	18.1
iC7-60SA3x05-3270		3270	24.9	22.7
iC7-60SA3x05-3650	5 x AM11	3650	26.2	23.8
iC7-60SA3x05-4080		4080	31.1	28.3
iC7-60SA3x05-4500	6 x AM11	4500	33.0	30.0
iC7-60SA3x05-4900		4900	37.4	33.9

1) Model codes starting with iC7-60SA3A05 or iC7-60SA3H05

10.8.5 Power Losses of AFE Modules without Options, 440–500 V

The specifications for the values in the table:

- Active front-end module
- 440–500 V AC (465–740 V DC)
- Losses calculated with 500 V AC and 740 V DC
- No input filters
- Switching frequency 4 kHz
- CMRPWM modulator

Table 102: Power Losses of AFE Modules without Options, 441–500 V

Model code[1]	Frame	Rated current I_L [A]	4 kHz	
			Total power losses [kW]	Main cooling channel power losses [kW]
iC7-60SA3x05-317A	AM10	309	2.2	2.1
iC7-60SA3x05-400A		380	2.9	2.6
iC7-60SA3x05-514A		463	3.8	3.5

Table 102: Power Losses of AFE Modules without Options, 441–500 V - (continued)

Model code[1]	Frame	Rated current I_L [A]	4 kHz	
			Total power losses [kW]	Main cooling channel power losses [kW]
iC7-60SA3x05-580A	AM11	520	3.7	3.4
iC7-60SA3x05-650A		585	4.4	4.0
iC7-60SA3x05-730A		650	5.0	4.6
iC7-60SA3x05-816A		731	5.9	5.5
iC7-60SA3x05-920A	2 x AM10	825	6.4	5.8
iC7-60SA3x05-1030		930	7.6	7.0
iC7-60SA3x05-1210	2 x AM11	1080	7.8	7.2
iC7-60SA3x05-1410		1250	9.5	8.7
iC7-60SA3x05-1630		1460	11.8	10.9
iC7-60SA3x05-1860	3 x AM11	1670	12.2	11.3
iC7-60SA3x05-2120		1910	14.6	13.4
iC7-60SA3x05-2450		2190	17.8	16.3
iC7-60SA3x05-2800	4 x AM11	2510	19.1	17.6
iC7-60SA3x05-3270		2920	23.7	21.8
iC7-60SA3x05-3650	5 x AM11	3290	25.3	23.2
iC7-60SA3x05-4080		3650	29.6	27.2
iC7-60SA3x05-4500	6 x AM11	4010	31.1	28.6
iC7-60SA3x05-4900		4390	35.6	32.8

1) Model codes starting with iC7-60SA3A05 or iC7-60SA3H05

10.8.6 Power Losses of AFE Modules without Options, 525–690 V

The specifications for the values in the table:

- Active front-end module
- 525–690 V AC (640–1100 V DC)
- Losses calculated with 690 V AC and 1025 V DC
- No input filters
- Switching frequency 3 kHz
- CMRPWM modulator

Danfoss Drives Oy © 2026.09

Table 103: Power Losses of AFE Modules without Options, 525–690 V

Model code[1]	Frame	Rated current IL [A]	3 kHz	
			Total power losses [kW]	Main cooling channel power losses [kW]
iC7-60SA3x07-236A	AM10	236	3.0	2.8
iC7-60SA3x07-300A		300	3.8	3.6
iC7-60SA3x07-334A		334	4.3	4.1
iC7-60SA3x07-380A		380	5.0	4.7
iC7-60SA3x07-425A	AM11	425	4.7	4.5
iC7-60SA3x07-475A		475	5.4	5.2
iC7-60SA3x07-530A		530	6.2	6.0
iC7-60SA3x07-595A	2 x AM10	595	7.6	7.2
iC7-60SA3x07-670A		670	8.6	8.2
iC7-60SA3x07-760A		760	10.0	9.5
iC7-60SA3x07-850A	2 x AM11	850	9.5	9.1
iC7-60SA3x07-945A		945	10.8	10.3
iC7-60SA3x07-1060		1060	12.5	11.9
iC7-60SA3x07-1190	3 x AM11	1190	13.1	12.5
iC7-60SA3x07-1325		1325	14.9	14.2
iC7-60SA3x07-1590		1590	18.7	17.9
iC7-60SA3x07-1780	4 x AM11	1780	20.1	19.2
iC7-60SA3x07-2120		2120	25.0	23.8
iC7-60SA3x07-2380	5 x AM11	2380	27.3	26.0
iC7-60SA3x07-2650		2650	31.2	29.8
iC7-60SA3x07-2970	6 x AM11	2970	34.4	32.8
iC7-60SA3x07-3180		3180	37.4	35.7
iC7-60SA3x07-3350	7 x AM11	3350	38.4	36.7
iC7-60SA3x07-3710		3710	43.7	41.7
iC7-60SA3x07-4000	8 x AM11	4000	46.4	44.3
iC7-60SA3x07-4240		4240	49.9	47.6

1) Model codes starting with iC7-60SA3A05 or iC7-60SA3H05

10.8.7 Power Losses of LCL Filter at Drive Nominal Parameters, 380–500 V

Table 104: Power Losses of LCL Filter, 380–500 V

Protection rating	Frame	Voltage [V]	Rated current [A]	Rated total power losses [kW]
IP00	LCL10	380–500	514	4.5
IP00 with an IP54 segregated cooling channel		380–500	514	4.5

Table 104: Power Losses of LCL Filter, 380–500 V - (continued)

Protection rating	Frame	Voltage [V]	Rated current [A]	Rated total power losses [kW]
IP00	LCL11	380–500	816	5.9
IP00 with an IP54 segregated cooling channel		380–500	816	5.1
IP00 with an IP54 segregated cooling channel	LCL11W	380–500	820	5.5
IP00 with an IP54 segregated cooling channel	LC11W	380–500	820	4.4

Approximately 95% of the power losses exit through the main cooling channel and 5% through the auxiliary cooling channel.

10.8.8 Power Losses of LCL Filter at Drive Nominal Parameters, 525–690 V

Table 105: Power Losses of LCL Filter, 525–690 V

Protection rating	Frame	Voltage [V]	Rated current [A]	Rated total power losses [kW]
IP00	LCL10	525–690	380	5.8
IP00 with an IP54 segregated cooling channel		525–690	380	4.7
IP00	LCL11	525–690	530	7.5
IP00 with an IP54 segregated cooling channel		525–690	530	6.9

Approximately 95% of the power losses exit through the main cooling channel and 5% through the auxiliary cooling channel.

10.8.9 Power Losses of Inverter Modules without Options, 380–440 V

The specifications for the values in the table:

- Inverter module
- 380–440 V AC (465–740 V DC)
- Losses calculated with 400 V AC and 594 V DC
- No output filters
- Switching frequency 2 kHz with SVPWM modulator or 3 kHz with DPWM modulator

Table 106: Power Losses of Inverter Modules without Options, 380–440 V

Model code	Frame	Rated current I_L [A]	3 kHz DPWM	
			Total power losses [kW]	Main cooling channel power losses [kW]
iC7-60SAIN05-385A	IM10	385	2.3	2.1
iC7-60SAIN05-480A		480	3.1	2.7
iC7-60SAIN05-590A		590	4.3	3.8
iC7-60SAIN05-658A	IM11	658	4.1	3.7
iC7-60SAIN05-730A		730	4.8	4.4
iC7-60SAIN05-820A		820	5.8	5.2
iC7-60SAIN05-880A		880	6.5	5.8
iC7-60SAIN05-1000	2 x IM10	1000	6.5	5.8
iC7-60SAIN05-1100		1100	7.6	6.8

Danfoss Drives Oy © 2026.09

Table 106: Power Losses of Inverter Modules without Options, 380–440 V - (continued)

Model code	Frame	Rated current I_L [A]	3 kHz DPWM	
			Total power losses [kW]	Main cooling channel power losses [kW]
iC7-60SAIN05-1260	2 x IM11	1260	7.7	7.0
iC7-60SAIN05-1450		1450	9.6	8.6
iC7-60SAIN05-1710		1710	12.4	11.2
iC7-60SAIN05-1760	3 x IM11	1760	10.5	9.5
iC7-60SAIN05-1960		1960	12.3	11.1
iC7-60SAIN05-2150		2150	14.1	12.8
iC7-60SAIN05-2510		2510	18.1	16.3
iC7-60SAIN05-2640	4 x IM11	2640	16.6	15.0
iC7-60SAIN05-2880		2880	19.0	17.1
iC7-60SAIN05-3280		3280	23.2	20.9
iC7-60SAIN05-3600	5 x IM11	3600	23.7	21.4
iC7-60SAIN05-4060		4060	28.4	25.6
iC7-60SAIN05-4320	6 x IM11	4320	28.5	25.7
iC7-60SAIN05-4870		4870	34.1	30.7

10.8.10 Power Losses of Inverter Modules with dU/dt Filter, 150 m (492 ft) Motor Cables, 380–440 V

The specifications for the values in the table:

- Inverter module
- 380–440 V AC (465–740 V DC)
- Losses calculated with 400 V AC and 594 V DC
- With dU/dt filter
- Switching frequency 3 kHz
- DPWM modulator
- Motor cable length is a maximum of 150 m (492 ft)

Table 107: Power Losses of Inverter Modules with dU/dt Filter, 150 m (492 ft) Motor Cables, 380–440 V

Model code	Frame	Rated current I_L [A]	3 kHz DPWM	
			Total power losses [kW]	Main cooling channel power losses [kW]
iC7-60SAIN05-385A	IR10	385	2.9	2.6
iC7-60SAIN05-480A		480	3.8	3.4
iC7-60SAIN05-590A		590	5.1	4.7
iC7-60SAIN05-658A	IR11	658	5.1	4.7
iC7-60SAIN05-730A		730	5.9	5.4
iC7-60SAIN05-820A		820	7.0	6.5
iC7-60SAIN05-880A		880	7.8	7.2

Table 107: Power Losses of Inverter Modules with dU/dt Filter, 150 m (492 ft) Motor Cables, 380–440 V - (continued)

Model code	Frame	Rated current I_L [A]	3 kHz DPWM	
			Total power losses [kW]	Main cooling channel power losses [kW]
iC7-60SAIN05-1000	2 x IR10	1000	8.0	7.3
iC7-60SAIN05-1100		1100	9.2	8.4
iC7-60SAIN05-1260	2 x IR11	1260	9.6	8.9
iC7-60SAIN05-1450		1450	11.7	10.8
iC7-60SAIN05-1710		1710	15.1	13.8
iC7-60SAIN05-1760	3 x IR11	1760	13.1	12.1
iC7-60SAIN05-1960		1960	15.2	14.0
iC7-60SAIN05-2150		2150	17.3	15.9
iC7-60SAIN05-2510		2510	21.9	20.2
iC7-60SAIN05-2640	4 x IR11	2640	20.5	18.9
iC7-60SAIN05-2880		2880	23.2	21.4
iC7-60SAIN05-3280		3280	28.2	25.9
iC7-60SAIN05-3600	5 x IR11	3600	29.0	26.7
iC7-60SAIN05-4060		4060	34.5	31.7
iC7-60SAIN05-4320	6 x IR11	4320	34.9	32.1
iC7-60SAIN05-4870		4870	41.4	38.0

10.8.11 Power Losses of Inverter Modules without Options, 440–500 V

The specifications for the values in the table:

- Inverter module
- 440–500 V AC (465–740 V DC)
- Losses calculated with 500 V AC and 740 V DC
- No output filters
- Switching frequency 2 kHz with SVPWM modulator or 3 kHz with DPWM modulator

Table 108: Power Losses of Inverter Modules without Options, 440–500 V

Model code	Frame	Rated current I_L [A]	3 kHz DPWM	
			Total power losses [kW]	Main cooling channel power losses [kW]
iC7-60SAIN05-385A	IM10	385	2.5	2.3
iC7-60SAIN05-480A		480	3.4	3.1
iC7-60SAIN05-590A		531	4.0	3.6
iC7-60SAIN05-658A	IM11	590	3.9	3.5
iC7-60SAIN05-730A		658	4.5	4.1
iC7-60SAIN05-820A		730	5.2	4.8
iC7-60SAIN05-880A		820	6.3	5.7

Danfoss Drives Oy © 2026.09

Table 108: Power Losses of Inverter Modules without Options, 440–500 V - (continued)

Model code	Frame	Rated current I_L [A]	3 kHz DPWM	
			Total power losses [kW]	Main cooling channel power losses [kW]
iC7-60SAIN05-1000	2 x IM10	920	6.4	5.8
iC7-60SAIN05-1100		1030	7.7	7.0
iC7-60SAIN05-1260	2 x IM11	1150	7.4	6.7
iC7-60SAIN05-1450		1300	8.9	8.1
iC7-60SAIN05-1710		1570	11.9	10.9
iC7-60SAIN05-1760	3 x IM11	1750	11.4	10.3
iC7-60SAIN05-1960		1900	12.9	11.7
iC7-60SAIN05-2150		2040	14.3	13.0
iC7-60SAIN05-2510		2340	17.7	16.2
iC7-60SAIN05-2640	4 x IM11	2480	16.7	15.2
iC7-60SAIN05-2880		2630	18.2	16.6
iC7-60SAIN05-3280		3050	22.6	20.6
iC7-60SAIN05-3600	5 x IM11	3500	24.7	22.5
iC7-60SAIN05-4060		3780	27.8	25.3
iC7-60SAIN05-4320	6 x IM11	4090	28.6	26.1
iC7-60SAIN05-4870		4530	33.3	30.3

10.8.12 Power Losses of Inverter Modules with dU/dt Filter, 150 m (492 ft) Motor Cables, 440–500 V

The specifications for the values in the table:

- Inverter module
- 440–500 V AC (465–740 V DC)
- Losses calculated with 500 V AC and 740 V DC
- With dU/dt filter
- Switching frequency 3 kHz
- DPWM modulator
- Motor cable length is a maximum of 150 m (492 ft)

Table 109: Power Losses of Inverter Modules with dU/dt Filter, 150 m (492 ft) Motor Cables, 440–500 V

Model code	Frame	Rated current I_L [A]	3 kHz DPWM	
			Total power losses [kW]	Main cooling channel power losses [kW]
iC7-60SAIN05-385A	IR10	385	3.3	3.1
iC7-60SAIN05-480A		480	4.3	4.0
iC7-60SAIN05-590A		531	5.0	4.7

Table 109: Power Losses of Inverter Modules with dU/dt Filter, 150 m (492 ft) Motor Cables, 440–500 V - (continued)

Model code	Frame	Rated current I_L [A]	3 kHz DPWM	
			Total power losses [kW]	Main cooling channel power losses [kW]
iC7-60SAIN05-658A	IR11	590	5.0	4.6
iC7-60SAIN05-730A		658	5.7	5.3
iC7-60SAIN05-820A		730	6.5	6.1
iC7-60SAIN05-880A		820	7.8	7.2
iC7-60SAIN05-1000	2 x IR10	920	8.2	7.6
iC7-60SAIN05-1100		1030	9.7	8.9
iC7-60SAIN05-1260	2 x IR11	1150	9.6	8.9
iC7-60SAIN05-1450		1300	11.3	10.5
iC7-60SAIN05-1710		1570	14.7	13.7
iC7-60SAIN05-1760	3 x IR11	1750	14.6	13.6
iC7-60SAIN05-1960		1900	16.4	15.2
iC7-60SAIN05-2150		2040	18.0	16.7
iC7-60SAIN05-2510		2340	21.9	20.4
iC7-60SAIN05-2640	4 x IR11	2480	21.2	19.8
iC7-60SAIN05-2880		2630	23.0	21.4
iC7-60SAIN05-3280		3050	28.1	26.1
iC7-60SAIN05-3600	5 x IM11	3500	31.0	28.8
iC7-60SAIN05-4060		3780	34.6	32.1
iC7-60SAIN05-4320	6 x IM11	4090	36.0	33.4
iC7-60SAIN05-4870		4530	41.4	38.4

10.8.13 Power Losses of Inverter Modules without Options, 525–690 V

The specifications for the values in the table:

- Inverter module
- 525–690 V AC (640–1100 V DC)
- Losses calculated with 690 V AC and 1025 V DC
- No output filters
- Switching frequency 1.33 kHz with SVPWM modulator or 2 kHz with DPWM modulator

Danfoss Drives Oy © 2026.09

Table 110: Power Losses of Inverter Modules without Options, 525–690 V

Model code	Frame	Rated current I_L [A]	2 kHz DPWM	
			Total power losses [kW]	Main cooling channel power losses [kW]
iC7-60SAIN07-261A	IM10	261	2.6	2.4
iC7-60SAIN07-325A		325	3.3	3.1
iC7-60SAIN07-365A		365	3.8	3.6
iC7-60SAIN07-416A		416	4.5	4.2
iC7-60SAIN07-465A	IM11	465	4.0	3.7
iC7-60SAIN07-525A		525	4.7	4.4
iC7-60SAIN07-590A		590	5.4	5.1
iC7-60SAIN07-650A	2 x IM10	650	6.6	6.2
iC7-60SAIN07-730A		730	7.6	7.2
iC7-60SAIN07-820A		820	8.8	8.3
iC7-60SAIN07-945A	2 x IM11	945	8.1	7.7
iC7-60SAIN07-1060		1060	9.4	8.9
iC7-60SAIN07-1180		1180	10.9	10.2
iC7-60SAIN07-1300	3 x IM11	1300	11.0	10.3
iC7-60SAIN07-1500		1500	13.1	12.3
iC7-60SAIN07-1770		1770	16.3	15.3
iC7-60SAIN07-1950	4 x IM11	1950	16.9	15.9
iC7-60SAIN07-2360		2360	21.7	20.4
iC7-60SAIN07-2600	5 x IM11	2600	23.0	21.6
iC7-60SAIN07-2950		2950	27.2	25.5
iC7-60SAIN07-3250	6 x IM11	3250	29.1	27.3
iC7-60SAIN07-3540		3540	32.6	30.6
iC7-60SAIN07-3800	7 x IM11	3800	34.1	32.0
iC7-60SAIN07-4130		4130	38.0	35.7
iC7-60SAIN07-4400	8 x IM11	4400	39.6	37.2
iC7-60SAIN07-4720		4720	43.5	40.8

10.8.14 Power Losses of Inverter Modules with dU/dt Filter, 150 m (492 ft) Motor Cables, 525-690 V

The specifications for the values in the table:

- Inverter module
- 525–690 V AC (640–1100 V DC)
- Losses calculated with 690 V AC and 1025 V DC
- With dU/dt filter
- Switching frequency 1.33 kHz with SVPWM modulator or 2 kHz with DPWM modulator
- Motor cable length is a maximum of 150 m (492 ft)

Table 111: Power Losses of Inverter Modules with dU/dt Filter, 150 m (492 ft) Motor Cables, 525-690 V

Model code	Frame	Rated current I_L [A]	2 kHz DPWM		
			Total power losses [kW]	Main cooling channel power losses [kW]	Filter losses [kW]
iC7-60SAIN07-261A	IM10	261	3.8	2.4	1.2
iC7-60SAIN07-325A		325	4.4	3.1	1.0
iC7-60SAIN07-365A		365	4.9	3.6	1.1
iC7-60SAIN07-416A		416	5.7	4.2	1.2
iC7-60SAIN07-465A	IM11	465	5.4	3.7	1.4
iC7-60SAIN07-525A		525	6.2	4.4	1.5
iC7-60SAIN07-590A		590	7.0	5.1	1.6
iC7-60SAIN07-650A	2 x IM10	650	8.7	6.2	2.1
iC7-60SAIN07-730A		730	9.8	7.2	2.2
iC7-60SAIN07-820A		820	11.2	8.3	2.4
iC7-60SAIN07-945A	2 x IM11	945	11.0	7.7	2.9
iC7-60SAIN07-1060		1060	12.4	8.9	3.0
iC7-60SAIN07-1180		1180	14.1	10.2	3.2
iC7-60SAIN07-1300	3 x IM11	1300	15.1	10.3	4.1
iC7-60SAIN07-1500		1500	17.5	12.3	4.4
iC7-60SAIN07-1770		1770	21.1	15.3	4.8
iC7-60SAIN07-1950	4 x IM11	1950	22.7	15.9	5.8
iC7-60SAIN07-2360		2360	28.2	20.4	6.5
iC7-60SAIN07-2600	5 x IM11	2600	30.5	21.6	7.5
iC7-60SAIN07-2950		2950	35.2	25.5	8.1
iC7-60SAIN07-3250	6 x IM11	3250	38.3	27.3	9.2
iC7-60SAIN07-3540		3540	42.3	30.6	9.7
iC7-60SAIN07-3800	7 x IM11	3800	44.8	32.0	10.7
iC7-60SAIN07-4130		4130	49.3	35.7	11.3
iC7-60SAIN07-4400	8 x IM11	4400	51.9	37.2	12.3
iC7-60SAIN07-4720		4720	56.4	40.8	12.9

10.9 Technical Data

Table 112: Mains Connection, NFE/AFE/GC Modules

Technical item or function	Technical data
Input voltage U_{in}	Voltage class 05: 3 x 380–500 V AC (-15%…+10%) Voltage class 07: 3 x 525–690 V AC (-15%...+10%)[1]
Protective class	Class I
Mains frequency	45–66 Hz

Danfoss Drives Oy © 2026.09

Table 112: Mains Connection, NFE/AFE/GC Modules - (continued)

Technical item or function	Technical data
Switching frequency	Voltage class 05 (AFE, GC): default 4 kHz Voltage class 07 (AFE, GC): default 3 kHz
Mains network	TN-S, TN-C, IT and TT. Supply voltage limited to 500 V AC for corner-grounded networks.
Displacement power factor (DPF)	NFE: >0.96 AFE: cos φ = 1: (fundamental) GC: cos φ = 0 ind. to 0 cap: (fundamental)
Total harmonics distortion THDi (Nominal situation and undistorted network. The total load balance of the system affects this value.)	NFE: <40% AFE: <5%
Short-circuit current rating, with the specified fuses or circuit breakers	The maximum short-circuit current I_{cc} ≤ 100 kA
Overvoltage category according to IEC 61800-5-1	Category III
Voltage imbalance	± 3%

1) Voltage class 07 is not applicable for the grid converter.

Table 113: Motor Connection, Inverter Modules

Technical item or function	Technical data
Output voltage	Voltage class 05: 0–400/460/500 V Voltage class 07: 0–525/575/690 V
Output frequency	0–590 Hz
Switching frequency	**Voltage class 05:** Inverter: 1.5–10 kHz DPWM, default 3 kHz DPWM **Voltage class 07:** Inverter: 2–6 kHz DPWM, default 2 kHz DPWM
Field weakening point	1–590 Hz
Motor control principles	U/f control VVC+ (Vector Voltage Control) FVC+ (Flux Vector Control)
Motor and generator types supported	Induction/asynchronous motor Non-salient permanent magnet motor
Torque control, torque step rise time	Open loop: <5 ms with nominal torque and <1 ms with nominal torque with AFE supply Closed loop: <5 ms with nominal torque and <1 ms with nominal torque with AFE supply
Torque control, static accuracy	Open loop: <2% of motor nominal torque up to nominal speed and <4% of motor nominal torque in the field weakening area Closed loop: <2% of motor nominal torque up to nominal speed and <4% of motor nominal torque in the field weakening area

Table 113: Motor Connection, Inverter Modules - (continued)

Technical item or function	Technical data
Speed control, static accuracy	Open loop: 5% of motor nominal slip up to motor nominal motor frequency and 10% of motor nominal slip in the field weakening area Closed loop: 0.01% static error of nominal speed with encoder PPR of 1024 or better
Speed control, dynamic accuracy (response)	Open loop: 0.2–0.4% s with nominal torque step Closed loop: 0.1–0.2% s with nominal torque step
Motor control resolution	Reference setpoint resolution 31 bit + sign
Cable length	Up to 150 m (492 ft) symmetrical and shielded motor cable. See the cable restrictions for filters in 7.1 dU/dt Filter and 7.2 Common-mode Filter.

Table 114: Control Electronic Connection

Technical item or function	Technical data
Input voltage U_{in}	24 V DC +15/-10%, DVC As (not for use in wet locations), power consumption is 15–60 W depending on configuration. Ground = negative polarity floating (potentially balanced (1 MΩ) against chassis)

Table 115: DC-bus Connection

Technical item or function	Technical data
Nominal DC-bus voltage	NFE: 1.35 x U_{in} Voltage class 05: 594 V DC (400 V AC), 740 V DC (500 V AC) Voltage class 07: 1025 V DC
DC-bus voltage range	05: 465–740 V DC 07: 640–1100 V DC
Power unit capacitance	**Voltage class 05:** IM10, IR10, AM10, AR10: 13.2 mF IM11, IR11, AM11, AR11: 20.8 mF **Voltage class 07:** IM10, IR10, AM10, AR10: 5.87 mF IM11, IR11, AM11, AR11: 8.67 mF
DC short-circuit current rating	I_{cc} 100 kA The time constant L/R of the fault loop impedance needs to be <3 ms with specified fuses.
Overvoltage category	Category II

Danfoss Drives Oy © 2026.09

Table 116: Inductances, NFE Modules

Technical item or function	Technical data
Inductance	Voltage class 05: • 730 A: 45 µH • 869 A: 27 µH • 1094 A: 22 µH Voltage class 07: • 504 A: 65 µH • 605 A: 65 µH • 806 A: 45 µH • 1007 A: 22 µH

Table 117: Ambient Conditions

Technical item or function	Technical data
Protection rating	IP00/NEMA/UL Open Type
Ambient operating temperature	-15 °C...0 °C (5 °F...32 °F) (no frost). The highest current rating of AM11 and IM11 must be derated 20% in freezing conditions. 0 °C...+40 °C (32 °F...104 °F) (at I_N) with derating up to +55 °C (131 °F).
Installation temperature	-10 °C...+70 °C (14 °F...158 °F)
Storage/transportation temperature	-40 °C…+70 °C (-40 °F...158 °F)
Relative humidity	5–95% RH, no condensation, no dripping water
Environmental conditions storage	(IEC 60721-3-1) Climatic conditions: Class 1K21 Chemically active substances: Class 1C2 Biological conditions: Class 1B1 Mechanical conditions: Class 1M11 Mechanically active substances: Class 1S12
Environmental conditions transportation	(IEC 60721-3-2) Climatic conditions: Class 2K11 Chemically active substances: Class 2C2 Biological conditions: Class 2B1 Mechanical conditions: Class 2M5 Mechanically active substances: Class 2S5
Environmental conditions operation	(IEC 60721-3-3) Climatic conditions: Class 3K22 Chemically active substances: Class C4 (ISO 9223:2012)(1) Biological conditions: Class 3B1 Mechanically active substances: Class 3S6 Special climatic conditions (heat radiation): Class 3Z1
Pollution degree	PD2

Table 117: Ambient Conditions - (continued)

Technical item or function	Technical data
Altitude	Voltage class 05: 0–4000 m (0–13100 ft) above sea level: in case the network is not corner-grounded. Voltage class 07: 0–2000 m (0–6600 ft) above sea level. Above 1000 m (3300 ft): derating of the output current by 1% per each 100 m (330 ft) is required.
Vibration (IEC60068-2-6)	Testing was performed according to IEC/EN 61800-5-1 + A1 and IEC/EN 62477-1 + A1, with these specifications:(2) • Frequency range 5–150 Hz • Displacement amplitude ±0.5 mm, 5–22.29 Hz • Constant peak acceleration 10 m/s^2 (1 g_n), 22.29–150 Hz
Shock (IEC60068-2-27)	Maximum 5 G, 30 ms
Sound pressure level **⚠ CAUTION** • When acoustic noise level is >70 dB(A), use hearing protection.	• 1 system module in cabinet: max. 80 dB(A) at worst case operation point • 2 modules in parallel: +3 dB(A) • 3 modules in parallel: +4.8 dB(A) • 4 modules in parallel: +6 dB(A) • 5 modules in parallel: +7 dB(A) • 6 modules in parallel: +7.8 dB(A)

1) On board level on coated boards.

2) For NFE modules, specifications from IEC/EN 61800-5-1 were used.

Table 118: EMC

Technical item or function	Technical data
Immunity	Fulfills IEC/EN 61800-3, 2nd environment Fulfills IEC/EN 61000-6-2
Emissions	Motor drives (AFE, INU): IEC/EN 61800-3, category C3, if the drive is installed according to manufacturer instructions. The EMC category can be changed to C4 for IT type mains. Power Converters (GC): CISPR11 / EN 55011 (Class A, Group 1)

Danfoss Drives Oy © 2026.09

Table 119: Protections

Technical item or function	Technical data
Overvoltage trip limit	Voltage class 05: 911 V DC Voltage class 07: 1250 V DC
Undervoltage trip limit	Set by parameter ***Unit Voltage Class***. Voltage class 05: • Class 1, mains voltage 380–440 V AC: 334 V DC • Class 2, mains voltage 440–480 V AC: 334 V DC • Class 3, mains voltage 480–500 V AC: 447 V DC Voltage class 07: • Class 1, mains voltage 525–550 V AC: 334 V DC • Class 2, mains voltage 550–600 V AC: 447 V DC • Class 3, mains voltage 600–690 V AC: 696 V DC For detailed voltage class descriptions, refer to the relevant application guide.
Ground fault protection	In TN and TT networks. Fulfills the requirements of IEC 60364-4-41 + AMD1, 411.
Missing phase supervision	Yes
Overcurrent protection	Yes
Unit overtemperature protection	Yes
Motor overload protection	Yes
Motor stall protection	Yes
Motor underload protection	Yes

Table 120: Product Compliance

Technical item or function	Technical data
Conformity	CE, cULus, RCM, KC See the product label for more approvals.
Safety Standards	IEC/EN 61800-5-1 IEC/EN 62477-1 UL 61800-5-1 CSA C22.2 No.274
Functional safety	STO/SS1-t with option +BEF2 See iC7 Series Functional Safety Operating Guide, Air-cooled and Liquid-cooled System Modules.
Marine type approvals	–

Table 121: Efficiency

Technical item or function	Technical data
Efficiency	Inverter >98.5%, AFE+LCL >97.5% at 380–690 V AC

Danfoss Drives Oy © 2026.09

Danfoss Drives Oy
Runsorintie 7
FIN-65380 Vaasa
drives.danfoss.com

Any information, including, but not limited to information on selection of product, its application or use, product design, weight, dimensions, capacity or any other technical data in product manuals, catalog descriptions, advertisements, etc. and whether made available in writing, orally, electronically, online or via download, shall be considered informative, and is only binding if and to the extent, explicit reference is made in a quotation or order confirmation. Danfoss cannot accept any responsibility for possible errors in catalogs, brochures, videos and other material. Danfoss reserves the right to alter its products without notice. This also applies to products ordered but not delivered provided that such alterations can be made without changes to form, fit or function of the product. All trademarks in this material are property of Danfoss A/S or Danfoss group companies. Danfoss and the Danfoss logo are trademarks of Danfoss A/S. All rights reserved.

AJ389643111587en-010401
Danfoss Drives Oy © 2026.09

1 7 2 F 6 3 6 1 D