Application guide



MLZ Evolution C (with POE Oil)

50-60 Hz: R404A-R507-R134a-R22-R407A-R407F-R448A-R449A-R452A-R513A
R454C-R455A-R454A

Description

The Danfoss MLZ refrigeration compressor offers a highly efficient solution for demanding refrigeration applications.

This family of refrigeration compressors includes 12 sizes of medium temperature scroll compressors designed for commercial refrigeration applications. These compressors are engineered for refrigeration and offer cooling capacity from 3.4 to 21 kW (2 to 10 HP) at common voltages and frequencies.

Table of Content

1 Introduction

- 1.1 Cut Away view

2 Certificates, declarations and approvals

- 2.1 Sub headline
- 2.2 Internal free volume

3 Refrigerant Compatibility

- 3.1 General information
- 3.2 Refrigerants

4 Technical specification

- 4.1 Sub headline

5 Sound and vibration data

- 5.1 Sub headline
- 5.2 Compressor sound radiation
- 5.3 Mechanical vibration

6 Operating envelope data

- 6.1 Operating envelope

7 Dimensions

- 7.1 Sub headline

8 Mechanical connections

- 8.1 Connection details
- 8.2 Design piping

9 Electrical connections

- 9.1 Sub headline
- 9.2 Wiring connections
- 9.3 Electrical specifications

10 Application

- 10.1 Manage operating envelope
- 10.2 Manage off cycle migration
- 10.3 Power supply and electrical protection

10.4 Assembly line procedure

11 Packaging

11.1 Compressor packaging

12 Ordering

12.1 Compressor code numbers

13 Accessories and spare parts

13.1 Sub headline

13.2 Acoustic hoods

13.3 Crankcase heaters

13.4 Discharge thermostats and sensors

13.5 Lubricant

13.6 Mounting kits

13.7 Rotolock adapter

13.8 Rotolock nuts

13.9 Rotolock service valves and valve sets (without gasket)

13.10 Solder sleeve adapter sets

13.11 Terminal boxes, covers & T-block connectors

Introduction

Cut Away view

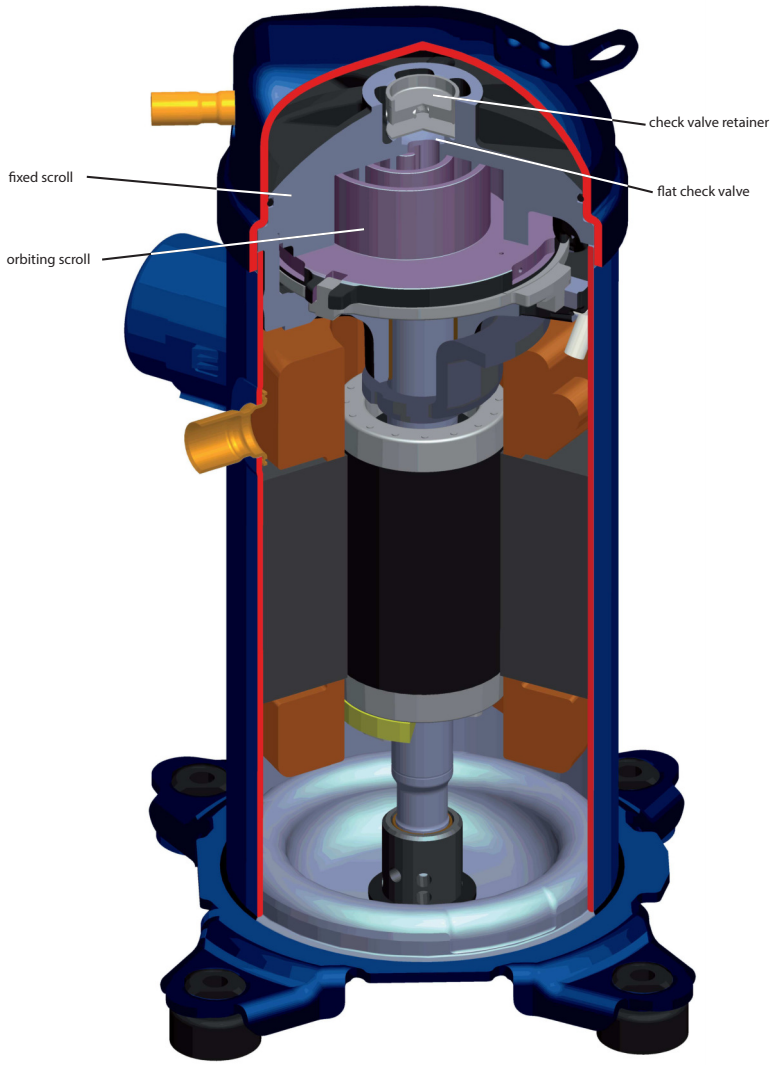

Thanks to its dedicated refrigeration design, the MLZ scroll compressor delivers a number of powerful advantages. With its high efficiency motor and optimised scroll design it reduces energy cost in normal operating conditions and delivers high capacity and an optimised pressure ratio for refrigeration applications.

The scroll compression process

The entire scroll compression process is illustrated below. The center of the orbiting scroll traces a circular path around the center of the fixed scroll. This movement creates compression pockets between the two scroll elements.

Low pressure suction gas is trapped within each crescent-shaped pocket as it forms; continuous motion of the orbiting scroll serves to seal the pocket, which decreases in volume as the pocket moves towards the center of the scroll set, with corresponding increase in gas pressure. Maximum compression is achieved, as the pocket reaches the discharge port at the center.

Scroll compression is a continuous process: when one pocket of gas is being compressed during the second orbit, another gas quantity enters a new pocket formed at the periphery, and simultaneously, another is being discharged.

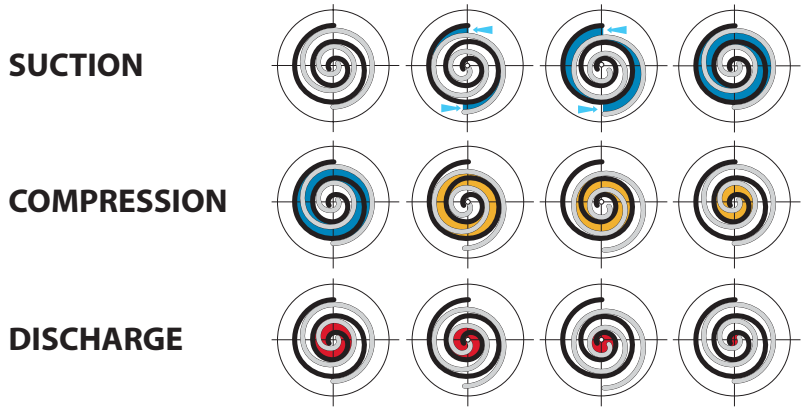

Danfoss scroll compressors are manufactured using the most advanced machining, assembly, and process control techniques. In design of both the compressor and the factory, very high standards of reliability and process control were first priority. The result is a highly efficient product with the highest reliability obtainable, and a low sound level.

Product identification

Nomenclature

Type	Size	Motor		Features		Evolution
MLZ	021	T	2 L	P	9	C

Application
M: Medium temperature refrigeration

Family, Refrigerant
LZ(C): R404A - R507 - R22 - R134a - R407A - R407F - R448A - R449A - R452A - R513A - R454C - R455A - R454A

Nominal capacity
In thousand Btu/h at 60Hz, ARI, MBP conditions

Model variation
T: Design optimised for refrigeration

Index
- with PVE oil
A with POE oil, C with POE oil and UL marked only

Other features

	Oil sight glass	Oil equalisation	Oil drain	LP gauge port	Gas equalisation port
9	Threaded	None	Schrader	None	None

Tubing and electrical connections
P: Brazed connections, spade terminals
C: Brazed connections, screw terminals
T: Rotolock connections, spade terminals
Q: Rotolock connections, screws terminals


Spade terminals


Screw terminals

Motor protection
L: Internal motor protection

Motor voltage code
1: 208-230V/1~/60Hz
2: 200-220V/3~/50Hz & 208-230V/3~/60Hz

Certificates, declarations and approvals

MLZ scroll compressors comply with the following approvals and certificates.

Certificates are listed on the product datasheets: http://www.danfoss.com/odsg

Certificates, declarations, and approvals	Certification logo	Models
UL (Underwriters Laboratories)	c UL us	Models with motor code1 except when using PTCSCR system
Other approvals / certificates		Contact Danfoss

Internal free volume

Products	Internal free volume at LP side without oil
MLZ 015-026	1.85 litre (113 in.^{3})
MLZ 030-048	3.44 litre (210 in.^{3})
MLZ 058-076	6.15 litre (375 in.^{3})

Refrigerant Compatibility

General information

When choosing a refrigerant, different aspects must be taken into consideration:

- Legislation (now and in the future)
- Safety
- Application envelope in relation to expected running conditions
- Compressor capacity and efficiency
- Compressor manufacturer recommendations & guidelines

Additional points could influence the final choice:

- Environmental considerations
- Standardisation of refrigerants and lubricants
- Refrigerant cost
- Refrigerant availability

⚠ Compressors must be operated with the approved refrigerants and oils, even just starting test on production line.

Refrigerants

R22

R22 is an HCFC refrigerant and is still a wide use today. It has a low ODP (Ozone Depletion Potential) and therefore it will be phased out in the future. Check local legislation.

When R22 is applied in refrigeration applications it can lead to high discharge temperature. Carefully check all other parameters that can influence the discharge temperature.

R134a

Refrigerant R134a is an HFC refrigerant. R134a has zero ozone depletion potential (ODP = 0) and is commonly accepted as the best R12 alternative. R134a is a pure refrigerant and has zero temperature glide. For applications with high evaporating and high condensing temperatures, R134a is the ideal choice.

R404A

R404A is an HFC refrigerant. R404A has zero ozone depletion potential (ODP = 0). R404A is especially suitable for low evaporating temperature applications but it can also be applied to medium evaporating temperature applications. R404A is a mixture and has a very small temperature glide, and therefore must be charged in its liquid phase, but for most other aspects this small glide can be neglected. Because of the small glide, R404A is often called a near-azeotropic mixture.

R507

R507 is an HFO refrigerant with properties comparable to R404A. R507 has no ozone depletion potential (ODP = 0). As with R404A, R507 is particularly suitable for low evaporating temperature applications but it can also be used for medium evaporating temperature applications. R507 is an azeotropic mixture with no temperature glide.

R407A & R407F

R407A and R407F are two HFC refrigerants with similar properties. Both have a GWP below 2200 and comply with the EU F-gas regulation. They can be used as alternatives to R404A and R507 refrigerants in MBP application.

R452A

R452A is a HFO refrigerant and has no ozone depletion potential. It has a GWP below 2200 and complies with the EU F-gas regulation.

It can be used as alternative to R404A and R507 refrigerants in MBP application.

R513A

R513A is a HFO refrigerant and has no ozone depletion potential. It has a GWP below 1000 and complies with the EU F-gas regulation. It can be used as alternative to R134a refrigerant.

R448A & R449A

R448A and R449A are two HFO-based refrigerants with similar properties. Both have a GWP below 1500 and comply with the EU F-gas regulation. They can be used as alternatives to R404A and R507 refrigerants in MBP application. R448A & R449A have zero ozone depletion potential (ODP=0). R448A & R449A are especially suitable for low evaporating temperature applications but they can also be applied to medium evaporating temperature applications. R448A & R449A are mixtures and have big temperature glide and therefore must be charged in their gas phase.

R454C

R454C is a HFO refrigerant blend (R32: 21.5%; R1234yf: 78.5%) and has no Ozone Depletion Potential (ODP=0). It has a low Global Warming Potential (GWP=148). It is a near-azeotropic mixture with temperature glide around 1K. R454C is classified as A2L with low flammability properties.

R455A

R455A is a HFO refrigerant blend (R744: 3.0%; R32: 21.5%; R1234yf: 75.5%) and has no Ozone Depletion Potential (ODP=0). It has a low Global Warming Potential (GWP=148). It is a near-azeotropic mixture with temperature glide around 1K. R455A is classified as A2L with low flammability properties.

R454A

R454A is a HFO refrigerant blend (R32: 35%; R1234yf: 65%) and has no Ozone Depletion Potential (ODP=0). It has a low Global Warming Potential (GWP=239). It is a near- azeotropic mixture with temperature glide around 1K. R454A is classified as A2L with low flammability properties.

Designation	Composition	ODP	GWP	Safety group	Boiling temp °C/°F	Temp glide °C/°F	Critical temp °C/°F	Critical pressure bar	Cond temp @ 26 bar °C/°F
R22	R22	0.055	1760	A1	-41.1 (-41.98 °F)	0 (0 °F)	96 (204.8 °F)	46.72	64.2 (147.56 °F)
R134a	R134a	0	1300	A1	-26.4 (-15.52 °F)	0 (0 °F)	101 (213.8 °F)	38.73	80.2 (176.36 °F)
R404A	52% R143a – 44% R125 – 4% R134a	0	3943	A1	-45.5 (-49.9 °F)	0.8 (1.44 °F)	73 (163.4 °F)	35.93	57.6 (135.68 °F)
R507	50% R134a – 50% R125	0	3985	A1	-46.7 (-52.06 °F)	0 (0 °F)	71 (159.8 °F)	35.77	56.2 (133.16 °F)
R407A	40% R134a – 40% R125 – 20% R32	0	1923	A1	-45.1 (-49.18 °F)	6.5 (11.7 °F)	83 (181.4 °F)	42.14	60.6 (141.08 °F)
R407F	40% R134a – 30% R125 – 30% R32	0	1674	A1	-39.7 (-39.46 °F)	6.4 (11.72 °F)	83 (181.4 °F)	44.42	58.5 (137.3 °F)
R448A	21% R134a – 20% R1234yf 26% R125 – 26% R32 – 7% R1234ze	0	1273	A1	-46.1 (-50.98 °F)	6.1 (10.98 °F)	83.7 (182.66 °F)	43.29	59.8 (139.64 °F)
R449A	24.3% R32 – 24.7% R125 25.3% R1234yf – 25.7% R134a	0	1282	A1	-45.7 (-50.26 °F)	6.0 (10.8 °F)	83.9 (183.02 °F)	43.43	59.9 (139.82 °F)
R452A	30% R1234yf – 59% R125 – 11% R32	0	1945	A1	-47 (-52.6 °F)	3.8 (6.8 °F)	77. 9 (172.22 °F)	41.29	54.3 (129.74 °F)
R513A	44% R134a – 56% R1234yf	0	573	A1	-29.6 (-21.3 °F)	0 (0 °F)	97.7 (207.9 °F)	34.55	83 (181.4 °F)
R454C	R32: 21.5%; R1234yf: 78.5%	0	148	A2L	-45.56 (50 °F)	0.6 (1.08 °F)	85.67 (186.2 °F)	43.19	63.7 (146.67 °F)
R455A	R744: 3.0%; R32: 21.5%; R1234yf: 75.5%	0	148	A2L	-52.02 (-61.64 °F)	0 (0 °F)	97.7 (207.9 °F)	46.54	61.17 (142.1 °F)
R454A	R32: 35%; R1234yf: 65%	0	239	A2L	-47.84 (-54.12 °F)	0.5 (0.9 °F)	81.72 (179.1 °F)	46.27	56.89 (134.4 °F)

POE

The POE oil RL46HB (215PZ) is an ISO VG 46 synthetic polyol ester (POE) lubricant formulated specifically for use in refrigeration and air-conditioning compressors using HFC refrigerants. This product provides effective wear protection for steel and aluminum surfaces for increased system life and improved efficiency and is suitable for both initial fill and service fill. The combination of low temperature characteristics and unparalleled chemical and thermal stability enable the use of RL46HB over a wide operating temperature range. As there could be also some MLZ with PVE compressor in field, the MLZ(A) with POE compressor could replace it. As PVE oil is fully miscible with POE, Danfoss recommends the POE oil (RL46HB) regardless of oil charge in the compressor. Replacement POE RL46HB oil is available for topping up or replacing oil in the field (see section "Accessory").

Motor supply

MLZ scroll compressors can be operated at nominal voltages as indicated in table section "Motor voltage". Under-voltage and over-voltage operation is allowed within the indicated voltage ranges. In case of risk of under-voltage operation, special attention must be paid to current draw and start assist for single-phase compressors may be required.

Compressor ambient temperature

MLZ compressors can be applied from -35 °C (-31 °F) to 55 °C (131 °F) ambient temperature. The compressors are designed as 100 % suction gas cooled without need for additional fan cooling. Ambient temperature has very little effect on the compressor performance.

High ambient temperature

In case of enclosed fitting and high ambient temperature it's recommend to check the temperature of power wires and conformity to their insulation specification.

In case of safe tripping by the internal compressor overload protection the compressor must cool down to about 60 °C (140 °F) before the overload will reset. A high ambient temperature can strongly delay this cool-down process.

Low ambient temperature

Although the compressor itself can withstand low ambient temperature, the system may require specific design features to ensure safe and reliable operation. See section 'Specific application recommendations'.

Technical specification

50 Hz

Model		HP	Nominal cooling capacity [1]		Power input [1]	Efficiency [1]		Swept volume		Displacement		Oil charge		Net weight (with oil)	
						COP	EER								
			W	Btu/h	kW	W/W	Btu/h/W	cm^3/rev	cu.in/rev	m^3/h	cu.ft/h	Litres	oz	kg	lb
R404A[2]	MLZ015	2	3300	11300	1.75	1.89	6.45	33.8	2.06	5.9	208	1.1	37	31	68
	MLZ019	2.5	4500	15400	2.16	2.06	7.03	43.5	2.65	7.6	268	1.1	37	31	68
	MLZ021	3	4700	16000	2.27	2.08	7.10	46.2	2.82	8.0	283	1.1	37	31	68
	MLZ026	3.5	5800	19800	2.90	2.00	6.83	57.1	3.48	9.9	350	1.1	37	31	68
	MLZ030	4	7100	24200	3.35	2.11	7.20	68.8	4.20	12.0	424	1.6	54	37	81
	MLZ038	5	8400	28700	3.86	2.19	7.47	81.0	4.94	14.1	498	1.6	54	37	81
	MLZ045	6	10200	34800	4.81	2.11	7.20	98.6	6.02	17.2	607	1.6	54	37	81
	MLZ048	7	11100	37900	5.17	2.14	7.30	107.5	6.56	18.7	660	1.6	54	37	81
	MLZ058	7.5	13000	44400	6.08	2.13	7.27	126.0	7.69	21.9	773	2.7	91	44	97
	MLZ066	9	15100	51500	7.01	2.15	7.34	148.8	9.08	25.9	915	2.7	91	45	99
	MLZ076	10	17300	59000	7.93	2.18	7.44	162.4	9.91	28.3	999	2.7	91	45	99
R134a[3]	MLZ015	2	2000	6800	1.02	1.95	6.66	33.8	2.06	5.9	208	1.1	37	31	68
	MLZ019	2.5	2500	8500	1.28	1.98	6.76	43.5	2.65	7.6	268	1.1	37	31	68
	MLZ021	3	2700	9200	1.33	2.04	6.96	46.2	2.82	8.0	283	1.1	37	31	68
	MLZ026	3.5	3300	11300	1.62	2.06	7.03	57.1	3.48	9.9	350	1.1	37	31	68
	MLZ030	4	4000	13700	1.93	2.09	7.13	68.8	4.20	12.0	424	1.6	54	37	81
	MLZ038	5	4700	16000	2.34	2.02	6.89	81.0	4.94	14.1	498	1.6	54	37	81
	MLZ045	6	5900	20100	2.69	2.17	7.41	98.6	6.02	17.2	607	1.6	54	37	81
	MLZ048	7	6200	21200	2.91	2.14	7.30	107.5	6.56	18.7	660	1.6	54	37	81
	MLZ058	7.5	7400	25300	3.61	2.06	7.03	126.0	7.69	21.9	773	2.7	91	44	97
	MLZ066	9	8600	29400	4.10	2.10	7.17	148.8	9.08	25.9	915	2.7	91	45	99
	MLZ076	10	9600	32800	4.67	2.06	7.03	162.4	9.91	28.3	999	2.7	91	45	99
R448A[4]	MLZ015	2	3200	11000	1.68	1.91	6.52	33.8	2.06	5.9	208	1.1	37	31	68
	MLZ019	2.5	4200	14300	2.11	1.99	6.79	43.5	2.65	7.6	268	1.1	37	31	68
	MLZ021	3	4400	15000	2.23	1.97	6.73	46.2	2.82	8.0	283	1.1	37	31	68
	MLZ026	3.5	5500	18700	2.78	1.97	6.72	57.1	3.48	9.9	350	1.1	37	31	68
	MLZ030	4	6600	22500	3.17	2.08	7.09	68.8	4.20	12.0	424	1.6	54	37	81
	MLZ038	5	7800	26600	3.64	2.14	7.30	81.0	4.94	14.1	498	1.6	54	37	81
	MLZ045	6	9700	33000	4.58	2.11	7.21	98.6	6.02	17.2	607	1.6	54	37	81
	MLZ048	7	10400	35500	5.06	2.06	7.02	107.5	6.56	18.7	660	1.6	54	37	81
	MLZ058	7.5	12200	41700	5.57	2.19	7.48	126.0	7.69	21.9	773	2.7	91	44	97
	MLZ066	9	14200	48500	6.75	2.11	7.21	148.8	9.08	25.9	915	2.7	91	45	99
	MLZ076	10	15200	51700	7.61	1.99	6.80	162.4	9.91	28.3	999	2.7	91	45	99
R22	MLZ015	2	3300	11263	1.53	2.15	7.34	33.8	2.06	5.9	208	1.1	37	31	68
	MLZ019	2.5	4300	14676	1.87	2.30	7.85	43.5	2.65	7.6	268	1.1	37	31	68
	MLZ021	3	4600	15700	2.02	2.27	7.75	46.2	2.82	8.0	283	1.1	37	31	68
	MLZ026	3.5	5700	19454	2.43	2.33	7.95	57.1	3.48	9.9	350	1.1	37	31	68
	MLZ030	4	6800	23208	2.93	2.33	7.95	68.8	4.20	12.0	424	1.6	54	37	81
	MLZ038	5	8100	27645	3.45	2.34	7.99	81.0	4.94	14.1	498	1.6	54	37	81
	MLZ045	6	9300	31741	4.14	2.24	7.65	98.6	6.02	17.2	607	1.6	54	37	81
	MLZ048	7	10600	36177	4.53	2.33	7.95	107.5	6.56	18.7	660	1.6	54	37	81
	MLZ058	7.5	12300	41980	5.29	2.33	7.95	126.0	7.69	21.9	773	2.7	91	44	97
	MLZ066	9	14100	48123	5.94	2.38	8.12	148.8	9.08	25.9	915	2.7	91	45	99
	MLZ076	10	16600	56655	6.96	2.38	8.12	162.4	9.91	28.3	999	2.7	91	45	99

[1] At EN12900 conditions: To= -10 °C (14 °F), Tc= 45 °C (113 °F), RGT= 20 °C (68 °F), SC= 0 K

[2] R507 performance data are nearly identical to R404A performance data

[3] To= -10 °C (14 °F), Tc= 45 °C (113 °F), SH= 10 K (18 °F), SC= 0 K

[4] R449A performance data are nearly identical to R448A performance data

All performance test data after run-in 72 hrs. Motor voltage code 2: 220 V/3~/50 Hz

50 Hz

Model		HP	Nominal cooling capacity [1]		Power input [1]	Efficiency [1]		Swept volume		Displacement		Oil charge		Net weight (with oil)	
						COP	EER								
			W	Btu/h	kW	W/W	Btu/h/W	cm^3/rev	cu.in/rev	m^3/h	cu.ft/h	Litres	oz	kg	lb
R407A	MLZ015	2	3100	10580	1.55	2.00	6.83	33.8	2.06	5.9	208	1.1	37	31	68
	MLZ019	2.5	4000	13652	2.04	1.96	6.69	43.5	2.65	7.6	268	1.1	37	31	68
	MLZ021	3	4200	14334	2.21	1.91	6.52	46.2	2.82	8.0	283	1.1	37	31	68
	MLZ026	3.5	5300	18089	2.71	1.96	6.69	57.1	3.48	9.9	350	1.1	37	31	68
	MLZ030	4	6500	22184	2.99	2.17	7.41	68.8	4.20	12.0	424	1.6	54	37	81
	MLZ038	5	7500	25597	3.47	2.16	7.37	81.0	4.94	14.1	498	1.6	54	37	81
	MLZ045	6	9100	31058	4.55	2.01	6.86	98.6	6.02	17.2	607	1.6	54	37	81
	MLZ048	7	10000	34130	5.01	2.00	6.83	107.5	6.56	18.7	660	1.6	54	37	81
	MLZ058	7.5	11500	39249	5.69	2.02	6.89	126.0	7.69	21.9	773	2.7	91	44	97
	MLZ066	9	13400	45734	6.78	1.98	6.76	148.8	9.08	25.9	915	2.7	91	45	99
	MLZ076	10	14700	50171	7.51	1.96	6.69	162.4	9.91	28.3	999	2.7	91	45	99
R407F	MLZ015	2	3300	11263	1.66	2.00	6.83	33.8	2.06	5.9	208	1.1	37	31	68
	MLZ019	2.5	4300	14676	2.19	1.96	6.69	43.5	2.65	7.6	268	1.1	37	31	68
	MLZ021	3	4500	15358	2.37	1.91	6.52	46.2	2.82	8.0	283	1.1	37	31	68
	MLZ026	3.5	5700	19454	2.90	1.96	6.69	57.1	3.48	9.9	350	1.1	37	31	68
	MLZ030	4	6900	23549	3.20	2.17	7.41	68.8	4.20	12.0	424	1.6	54	37	81
	MLZ038	5	8000	27304	3.72	2.16	7.37	81.0	4.94	14.1	498	1.6	54	37	81
	MLZ045	6	9800	33447	4.87	2.01	6.86	98.6	6.02	17.2	607	1.6	54	37	81
	MLZ048	7	10800	36860	5.37	2.01	6.86	107.5	6.56	18.7	660	1.6	54	37	81
	MLZ058	7.5	12300	41980	6.09	2.02	6.89	126.0	7.69	21.9	773	2.7	91	44	97
	MLZ066	9	14400	49147	7.26	1.99	6.79	148.8	9.08	25.9	915	2.7	91	45	99
	MLZ076	10	15800	53925	8.04	1.96	6.69	162.4	9.91	28.3	999	2.7	91	45	99
R452A	MLZ015	2	3400	11500	1.71	1.97	6.72	33.8	2.06	5.9	208	1.1	37	31	68
	MLZ019	2.5	4300	14700	2.17	1.99	6.80	43.5	2.65	7.6	268	1.1	37	31	68
	MLZ021	3	4600	15700	2.27	2.02	6.89	46.2	2.82	8.0	283	1.1	37	31	68
	MLZ026	3.5	5700	29400	2.81	2.02	6.90	57.1	3.48	9.9	350	1.1	37	31	68
	MLZ030	4	6800	23400	3.27	2.10	7.18	68.8	4.20	12.0	424	1.6	54	37	81
	MLZ038	5	8000	27300	3.81	2.10	7.18	81.0	4.94	14.1	498	1.6	54	37	81
	MLZ045	6	10100	34300	4.81	2.09	7.14	98.6	6.02	17.2	607	1.6	54	37	81
	MLZ048	7	11000	37500	5.17	2.12	7.25	107.5	6.56	18.7	660	1.6	54	37	81
	MLZ058	7.5	12900	44000	5.89	2.19	7.48	126.0	7.69	21.9	773	2.7	91	44	97
	MLZ066	9	15100	51500	7.15	2.11	7.20	148.8	9.08	25.9	915	2.7	91	45	99
	MLZ076	10	16200	55200	7.94	2.04	6.95	162.4	9.91	28.3	999	2.7	91	45	99
R513A	MLZ015	2	2100	7200	1.09	1.93	6.58	33.8	2.06	5.9	208	1.1	37	31	68
	MLZ019	2.5	2700	9300	1.37	1.98	6.75	43.5	2.65	7.6	268	1.1	37	31	68
	MLZ021	3	2900	9900	1.45	1.99	6.78	46.2	2.82	8.0	283	1.1	37	31	68
	MLZ026	3.5	3600	12200	1.78	2.01	6.85	57.1	3.48	9.9	350	1.1	37	31	68
	MLZ030	4	4400	14900	2.04	2.14	7.29	68.8	4.20	12.0	424	1.6	54	37	81
	MLZ038	5	5100	17500	2.34	2.18	7.45	81.0	4.94	14.1	498	1.6	54	37	81
	MLZ045	6	6400	21700	2.96	2.15	7.33	98.6	6.02	17.2	607	1.6	54	37	81
	MLZ048	7	6800	23100	3.21	2.11	7.19	107.5	6.56	18.7	660	1.6	54	37	81
	MLZ058	7.5	8000	27300	3.64	2.20	7.51	126.0	7.69	21.9	773	2.7	91	44	97
	MLZ066	9	9300	31800	4.44	2.10	7.17	148.8	9.08	25.9	915	2.7	91	45	99
	MLZ076	10	10000	34100	5.13	1.95	6.65	162.4	9.91	28.3	999	2.7	91	45	99

[1] At EN12900 conditions: To= -10 °C (14 °F), Tc= 45 °C (113 °F), RGT= 20 °C (68 °F), SC= 0 K
Only motor code 4, code 5 of MLZ are qualified with R407A/R407F
All performance test data after run-in 72 hrs
Motor voltage code 2: 220 V/3~/50 Hz

60 Hz

Model		HP	Nominal cooling capacity (1)		Power input (1)	Efficiency (1)		Swept volume		Displacement		Oil charge		Net weight (with oil)	
						COP	EER								
			W	Btu/h	kW	W/W	Btu/h/W	cm^3/rev	cu.in/rev	m^3/h	cu.ft/h	Litres	oz	kg	lb
R404A(2)	MLZ015	2	4100	14000	2.10	1.94	6.62	33.8	2.06	7.1	251	1.1	37	31	68
	MLZ019	2.5	5500	18800	2.58	2.11	7.20	43.5	2.65	9.1	321	1.1	37	31	68
	MLZ021	3	5800	19800	2.74	2.13	7.27	46.2	2.82	9.7	343	1.1	37	31	68
	MLZ026	3.5	7200	24600	3.44	2.10	7.17	57.1	3.48	12.0	424	1.1	37	31	68
	MLZ030	4	8500	29000	3.90	2.18	7.44	68.8	4.20	14.4	509	1.6	54	37	81
	MLZ038	5	10200	34800	4.70	2.18	7.44	81.0	4.94	17.0	600	1.6	54	37	81
	MLZ045	6	12400	42300	5.64	2.19	7.47	98.6	6.02	20.7	731	1.6	54	37	81
	MLZ048	7	13500	46100	6.15	2.20	7.51	107.5	6.56	22.6	798	1.6	54	37	81
	MLZ058	7.5	15700	53600	7.35	2.14	7.30	126.0	7.69	26.4	932	2.7	91	44	97
	MLZ066	9	18400	62800	8.40	2.18	7.44	148.8	9.08	31.3	1105	2.7	91	45	99
	MLZ076	10	20900	71300	9.59	2.18	7.44	162.4	9.91	34.1	1204	2.7	91	45	99
R134a(3)	MLZ015	2	2400	8200	1.19	2.05	7.00	33.8	2.06	7.1	251	1.1	37	31	68
	MLZ019	2.5	3100	10600	1.53	2.03	6.93	43.5	2.65	9.1	321	1.1	37	31	68
	MLZ021	3	3300	11300	1.58	2.10	7.17	46.2	2.82	9.7	343	1.1	37	31	68
	MLZ026	3.5	4100	14000	1.91	2.15	7.34	57.1	3.48	12.0	424	1.1	37	31	68
	MLZ030	4	5000	17100	2.35	2.11	7.20	68.8	4.20	14.4	509	1.6	54	37	81
	MLZ038	5	5800	19800	2.80	2.09	7.13	81.0	4.94	17.0	600	1.6	54	37	81
	MLZ045	6	7100	24200	3.32	2.14	7.30	98.6	6.02	20.7	731	1.6	54	37	81
	MLZ048	7	7600	25900	3.54	2.14	7.30	107.5	6.56	22.6	798	1.6	54	37	81
	MLZ058	7.5	9100	31100	4.28	2.13	7.27	126.0	7.69	26.4	932	2.7	91	44	97
	MLZ066	9	10400	35500	4.85	2.15	7.34	148.8	9.08	31.3	1105	2.7	91	45	99
	MLZ076	10	11700	39900	5.61	2.09	7.13	162.4	9.91	34.1	1204	2.7	91	45	99
R448A(4)	MLZ015	2	3800	13100	1.96	1.96	6.69	33.8	2.06	7.1	251	1.1	37	31	68
	MLZ019	2.5	5100	17400	2.48	2.06	7.02	43.5	2.65	9.1	321	1.1	37	31	68
	MLZ021	3	5400	18400	2.62	2.06	7.03	46.2	2.82	9.7	343	1.1	37	31	68
	MLZ026	3.5	6800	23200	3.21	2.12	7.23	57.1	3.48	12.0	424	1.1	37	31	68
	MLZ030	4	6600	22500	3.17	2.08	7.09	68.8	4.20	14.5	512	1.6	54	37	81
	MLZ038	5	8200	28100	3.72	2.22	7.56	81.0	4.94	17.0	600	1.6	54	37	81
	MLZ045	6	11600	39500	5.57	2.08	7.10	98.6	6.02	20.7	731	1.6	54	37	81
	MLZ048	7	12800	43800	5.93	2.16	7.38	107.5	6.56	22.6	798	1.6	54	37	81
	MLZ058	7.5	15100	51500	6.65	2.27	7.74	126.0	7.69	26.5	936	2.7	91	44	97
	MLZ066	9	17400	59300	8.05	2.16	7.36	148.8	9.08	31.3	1105	2.7	91	45	99
	MLZ076	10	18700	63800	8.88	2.11	7.19	162.4	9.91	34.1	1204	2.7	91	45	99
R22	MLZ015	2	3900	13311	1.74	2.26	7.71	33.8	2.06	7.1	251	1.1	37	31	68
	MLZ019	2.5	5200	17747	2.22	2.37	8.09	43.5	2.65	9.1	321	1.1	37	31	68
	MLZ021	3	5600	19113	2.36	2.36	8.05	46.2	2.82	9.7	343	1.1	37	31	68
	MLZ026	3.5	7000	23891	2.93	2.39	8.16	57.1	3.48	12.0	424	1.1	37	31	68
	MLZ030	4	8200	27986	3.46	2.36	8.05	68.8	4.20	14.5	512	1.6	54	37	81
	MLZ038	5	9600	32765	4.06	2.36	8.05	81.0	4.94	17.0	600	1.6	54	37	81
	MLZ045	6	11700	39932	4.91	2.38	8.12	98.6	6.02	20.7	731	1.6	54	37	81
	MLZ048	7	12900	44027	5.36	2.4	8.19	107.5	6.56	22.6	798	1.6	54	37	81
	MLZ058	7.5	14900	50853	6.34	2.34	7.99	126.0	7.69	26.5	936	2.7	91	44	97
	MLZ066	9	17000	58020	7.14	2.38	8.12	148.8	9.08	31.3	1105	2.7	91	45	99
	MLZ076	10	20100	68601	8.40	2.39	8.16	162.4	9.91	34.1	1204	2.7	91	45	99

(1) At EN12900 conditions: To= -10 °C (14 °F), Tc= 45 °C (113 °F), RGT= 20 °C (68 °F), SC= 0 K

(2) R507 performance data are nearly identical to R404A performance data

(3) To= -10 °C (14 °F), Tc= 45 °C (113 °F), SH= 10 K (18 °F), SC= 0 K

(4) R449A performance data are nearly identical to R448A performance data

All performance test data after run-in 72 hrs

Motor voltage code 2: 230 V/3~/60 Hz

60 Hz

Model		HP	Nominal cooling capacity (1)		Power input (1)	Efficiency (1)		Swept volume		Displacement		Oil charge		Net weight (with oil)	
						COP	EER								
			W	Btu/h	kW	W/W	Btu/h/W	cm^3/rev	cu.in/rev	m^3/h	cu.ft/h	Litres	oz	kg	lb
R407A	MLZ015	2	3800	12969	1.85	2.04	6.96	33.8	2.06	7.1	251	1.1	37	31	68
	MLZ019	2.5	4900	16724	2.40	2.06	7.03	43.5	2.65	9.1	321	1.1	37	31	68
	MLZ021	3	5300	18089	2.63	2.01	6.86	46.2	2.82	9.7	343	1.1	37	31	68
	MLZ026	3.5	6400	21843	3.10	2.07	7.06	57.1	3.48	12.0	424	1.1	37	31	68
	MLZ030	4	7900	26962	3.52	2.25	7.68	68.8	4.20	14.5	512	1.6	54	37	81
	MLZ038	5	9200	31399	4.10	2.24	7.65	81.0	4.94	17.0	600	1.6	54	37	81
	MLZ045	6	11200	38225	5.37	2.09	7.13	98.6	6.02	20.7	731	1.6	54	37	81
	MLZ048	7	12200	41638	6.01	2.03	6.93	107.5	6.56	22.6	798	1.6	54	37	81
	MLZ058	7.5	14300	48805	6.68	2.14	7.30	126.0	7.69	26.5	936	2.7	91	44	97
	MLZ066	9	16700	56997	7.89	2.12	7.24	148.8	9.08	31.3	1105	2.7	91	45	99
	MLZ076	10	18100	61775	8.64	2.09	7.13	162.4	9.91	34.1	1204	2.7	91	45	99
R407F	MLZ015	2	4100	13993	1.98	2.05	7.00	33.8	2.06	7.1	251	1.1	37	31	68
	MLZ019	2.5	5300	18089	2.57	2.06	7.03	43.5	2.65	9.1	321	1.1	37	31	68
	MLZ021	3	5700	19454	2.81	2.01	6.86	46.2	2.82	9.70	343	1.1	37	31	68
	MLZ026	3.5	6900	23549	3.32	2.08	7.10	57.1	3.48	12.0	424	1.1	37	31	68
	MLZ030	4	8500	29010	3.77	2.26	7.71	68.8	4.20	14.5	512	1.6	54	37	81
	MLZ038	5	9800	33447	4.38	2.24	7.65	81.0	4.94	17.0	600	1.6	54	37	81
	MLZ045	6	12000	40956	5.75	2.09	7.13	98.6	6.02	20.7	731	1.6	54	37	81
	MLZ048	7	13100	44710	6.44	2.04	6.96	107.5	6.56	22.6	798	1.6	54	37	81
	MLZ058	7.5	15300	52218	7.15	2.14	7.30	126.0	7.69	26.5	936	2.7	91	44	97
	MLZ066	9	18000	61433	8.45	2.13	7.27	148.8	9.08	31.3	1105	2.7	91	45	99
	MLZ076	10	19400	66212	9.25	2.09	7.13	162.4	9.91	34.1	1204	2.7	91	45	99
R452A	MLZ015	2	4100	13900	2.05	1.99	6.78	33.8	2.06	7.1	251	1.1	37	31	68
	MLZ019	2.5	5200	17900	2.57	2.03	6.94	43.5	2.65	9.1	321	1.1	37	31	68
	MLZ021	3	5500	18800	2.70	2.05	6.99	46.2	2.82	9.70	343	1.1	37	31	68
	MLZ026	3.5	6800	23300	3.34	2.04	6.97	57.1	3.48	12.0	424	1.1	37	31	68
	MLZ030	4	8400	28700	3.94	2.14	7.29	68.8	4.20	14.5	512	1.6	54	37	81
	MLZ038	5	9800	33300	4.55	2.15	7.34	81.0	4.94	17.0	600	1.6	54	37	81
	MLZ042	5.5	11400	38900	5.68	2.01	6.85	93.1	5.68	19.6	692	1.6	54	37	81
	MLZ045	6	12000	41000	5.71	2.11	7.18	98.6	6.02	20.7	731	1.6	54	37	81
	MLZ048	7	13300	45200	6.24	2.13	7.26	107.5	6.56	22.6	798	1.6	54	37	81
	MLZ058	7.5	15500	53000	7.09	2.19	7.48	126.0	7.69	26.5	936	2.7	91	44	97
	MLZ066	9	18500	63100	8.42	2.20	7.50	148.8	9.08	31.3	1105	2.7	91	45	99
	MLZ076	10	19800	67600	9.26	2.14	7.30	162.4	9.91	34.1	1204	2.7	91	45	99
R513A	MLZ015	2	2500	8600	1.32	1.91	6.52	33.8	2.06	7.1	251	1.1	37	31	68
	MLZ019	2.5	3300	11200	1.66	1.98	6.75	43.5	2.65	9.1	321	1.1	37	31	68
	MLZ021	3	3500	11900	1.75	2.00	6.81	46.2	2.82	9.70	343	1.1	37	31	68
	MLZ026	3.5	4300	14800	2.12	2.04	6.98	57.1	3.48	12.0	424	1.1	37	31	68
	MLZ030	4	5300	17900	2.47	2.13	7.28	68.8	4.20	14.5	512	1.6	54	37	81
	MLZ038	5	6200	21300	2.89	2.16	7.37	81.0	4.94	17.0	600	1.6	54	37	81
	MLZ045	6	7600	25800	3.65	2.07	7.07	98.6	6.02	20.7	731	1.6	54	37	81
	MLZ048	7	8300	28200	3.90	2.12	7.24	107.5	6.56	22.6	798	1.6	54	37	81
	MLZ058	7.5	9600	32900	4.40	2.19	7.48	126.0	7.69	26.5	936	2.7	91	44	97
	MLZ066	9	11400	38800	5.15	2.21	7.53	148.8	9.08	31.3	1105	2.7	91	45	99
	MLZ076	10	12000	41100	5.96	2.02	6.90	162.4	9.91	34.1	1204	2.7	91	45	99

(1) At EN12900 conditions: To= -10 °C (14 °F), Tc= 45 °C (113 °F), RGT= 20 °C (68 °F), SC= 0 K
All performance test data after run-in 72 hrs
Motor voltage code 2: 230 V/3~/60 H

Refrigerant	Model	Motor code	-10/45/ RGT20/0 @50 Hz			-6.5/43.5/ RGT18.5/0 @60 Hz		
			Cooling capacity[W]	Power input [W]	EER [Btu/h/W]	Cooling [W]	Power [W]	EER [Btu/h/W]
R454C	MLZ015	Code 2	2933	1415	7.07	4304	1658	8.86
		Code 1		NA		4146	1734	8.16
	MLZ019	Code 2	3888	1770	7.5	5668	2060	9.39
		Code 1		NA		5340	2195	8.3
	MLZ021	Code 2	4054	1859	7.44	5789	2167	9.11
		Code 1		NA		5669	2271	8.52
	MLZ026	Code 2	4934	2239	7.52	7041	2630	9.13
		Code 1		NA		7100	2864	8.46
	MLZ030	Code 2	5958	2691	7.55	8410	3184	9.01
		Code 1		NA		8550	3357	8.69
	MLZ038	Code 2	7071	3106	7.77	10030	3671	9.32
		Code 1		NA		10081	4001	8.59
	MLZ045	Code 2	8735	3958	7.53	12440	4641	9.15
	MLZ048	Code 2	9584	4231	7.73	13630	4945	9.4
	MLZ058	Code 2	11160	4794	7.94	15900	5639	9.62
	MLZ066	Code 2	13020	5797	7.66	18680	6708	9.5
	MLZ076	Code 2	14410	6459	7.61	20810	7467	9.51
R455A	MLZ015	Code 2	3126	1510	7.06	4472	1784	8.55
		Code 1		NA		4477	1833	8.34
	MLZ019	Code 2	4114	1906	7.36	5941	2205	9.19
		Code 1		NA		5755	2305	8.52
	MLZ021	Code 2	4261	1999	7.27	6052	2330	8.86
		Code 1		NA		6196	2398	8.82
	MLZ026	Code 2	5307	2477	7.31	7549	2851	9.03
		Code 1		NA		7717	3038	8.67
	MLZ030	Code 2	6315	2911	7.4	8986	3420	8.96
		Code 1		NA		9205	3560	8.82
	MLZ038	Code 2	7486	3378	7.56	10680	3943	9.24
		Code 1		NA		10900	4230	8.79
	MLZ045	Code 2	9316	4265	7.45	13310	4974	9.13
	MLZ048	Code 2	1029	4586	0.77	14610	5333	9.35
	MLZ058	Code 2	1259	5147	0.83	17910	6010	10.17
	MLZ066	Code 2	1463	6158	0.81	21110	7192	10.01
	MLZ076	Code 2	1555	6946	0.76	22530	8032	9.57
R454A	MLZ015	Code 2	3275	1812	6.17	4750	2038	7.95
		Code 1		NA		4749	2025	8
	MLZ019	Code 2	4316	2222	6.63	6190	2498	8.46
		Code 1		NA		6257	2550	8.37
	MLZ021	Code 2	4600	2338	6.71	6589	2679	8.39
		Code 1		NA		6650	2637	8.61
	MLZ026	Code 2	5780	2855	6.91	8311	3240	8.75
		Code 1		NA		8228	3356	8.37
	MLZ030	Code 2	6935	3399	6.96	9910	3872	8.73
		Code 1		NA		9979	3938	8.65
	MLZ038	Code 2	8132	3992	6.95	11727	4456	8.98
		Code 1		NA		11678	4697	8.48
	MLZ045	Code 2	10136	4912	7.04	14554	5520	9
	MLZ048	Code 2	11002	5428	6.92	15698	6138	8.73
	MLZ058	Code 2	12827	6178	7.09	18423	6852	9.17
	MLZ066	Code 2	14855	7631	6.64	21685	8245	8.97
	MLZ076	Code 2	15610	8152	6.53	23319	8863	8.98

* All performance test data after run-in 72 hrs

Sound and vibration data

Starting sound level

During start-up transients it is natural for the compressor sound level to be slightly higher than during normal running. MLZ scroll compressors exhibit very little increased start-up transient sound. If a 3-phase model is miswired, the compressor will run in reverse. Reverse compressor rotation is characterized by an objectionable sound. To correct reverse rotation, disconnect power and switch any two of the three power leads at the unit contactor. Never switch leads at the compressor terminals.

Running sound level

MLZ are designed with features to reduce the sound level when a compressor is running.

Sound levels are at rated (EN12900 medium temperature) conditions.

Model	50 Hz		60 Hz	
	Sound power (dBA) Without jacket	Sound power (dBA) With jacket	Sound power (dBA) Without jacket	Sound power (dBA) With jacket
MLZ015	69	59	73	62
MLZ019	69	59	73	62
MLZ021	69	59	73	62
MLZ026	69	61	73	64
MLZ030	71	64	75	67
MLZ038	71	65	76	68
MLZ045	73	65	76	68
MLZ048	74	66	76	69
MLZ058	76	68	80	72
MLZ066	76	68	80	72
MLZ076	76	68	80	72

Maximum sound is +5 dBA

Stopping sound level

MLZ have a unique discharge valve design that minimizes stopping noise. This results in very low shutdown sound.

Sound generation in a refrigeration system

Typical sound and vibration in refrigeration systems encountered by design and service engineers may be broken down into the following three source categories.

Sound radiation: This generally takes an airborne path.

Mechanical vibrations: These generally extend along the parts of the unit and structure.

Gas pulsation: This tends to travel through the cooling medium, i.e. the refrigerant.

The following sections will focus on the causes and methods of mitigation for each of the above sources.

Compressor sound radiation

For sound radiating from the compressor, the emission path is airborne and the sound waves are travelling directly from the machine in all directions.

The MLZ scroll compressors are designed to be quiet and the frequency of the sound generated is pushed into the higher ranges, which not only are easier to reduce but also do not generate the penetrating power of lower-frequency sound.

Use of sound-insulation materials on the inside of unit panels is an effective means of substantially reducing the sound being transmitted to the outside. Ensure that no components capable of transmitting sound/vibration within the unit come into direct contact with any non insulated parts on the walls of the unit.

Because of the unique design of a full-suction gas & oil cooled motor, compressor body insulation across its entire operating range is possible.

Mechanical vibration

Vibration isolation constitutes the primary method for controlling structural vibration.

MLZ scroll compressors are designed to produce minimal vibration during operations. The use of rubber isolators on the compressor base plate or on the frame of a manifolded unit is very effective in reducing vibration being transmitted from the compressor(s) to the unit. Rubber grommets are supplied with all MLZ compressors. Once the supplied rubber grommets have been properly mounted, vibration transmitted from the compressor base plate to the unit are held to a strict minimum. In addition, it is extremely important that the frame supporting the mounted compressor be of sufficient mass and stiffness to help dampen any residual vibration potentially transmitted to the frame. The tubing should be designed so as to both reduce the transmission of vibrations to other structures and withstand vibration without incurring any damage. Tubing should also be designed for three-dimensional flexibility. For more information on piping design, please see the section entitled "Essential piping design considerations".

Gas pulsation

The MLZ scroll compressors have been designed and tested to ensure that gas pulsation has been minimized for the most commonly encountered refrigeration pressure ratio. On installations where the pressure ratio lies beyond the typical range, testing should be conducted under all expected conditions and operating configurations to ensure that minimum gas pulsation is present. If an unacceptable level is identified, a discharge muffler with the appropriate resonant volume and mass should be installed. This information can be obtained from the component manufacturer.

Operating envelope data

Operating envelope

The operating envelopes for MLZ scroll compressors are given in the figures below, where the condensing and evaporating temperatures represent the range for steady-state operation. Under transient conditions, such as start-up and defrost, the compressor may operate outside this envelope for short periods.

The figures below show the operating envelopes for MLZ compressors with refrigerants R404A/507, R134a, R22, R407A, R407F, R452A, R513A, R448A and R449A. The operating limits serve to define the envelope within which reliable operations of the compressor are guaranteed:

- Maximum discharge gas temperature: +135 °C (275 °F)
- A suction superheat below 5 K (9 °F) is not recommended due to the risk of liquid flood back
- Minimum and maximum evaporating and condensing temperatures as per the operating envelopes.

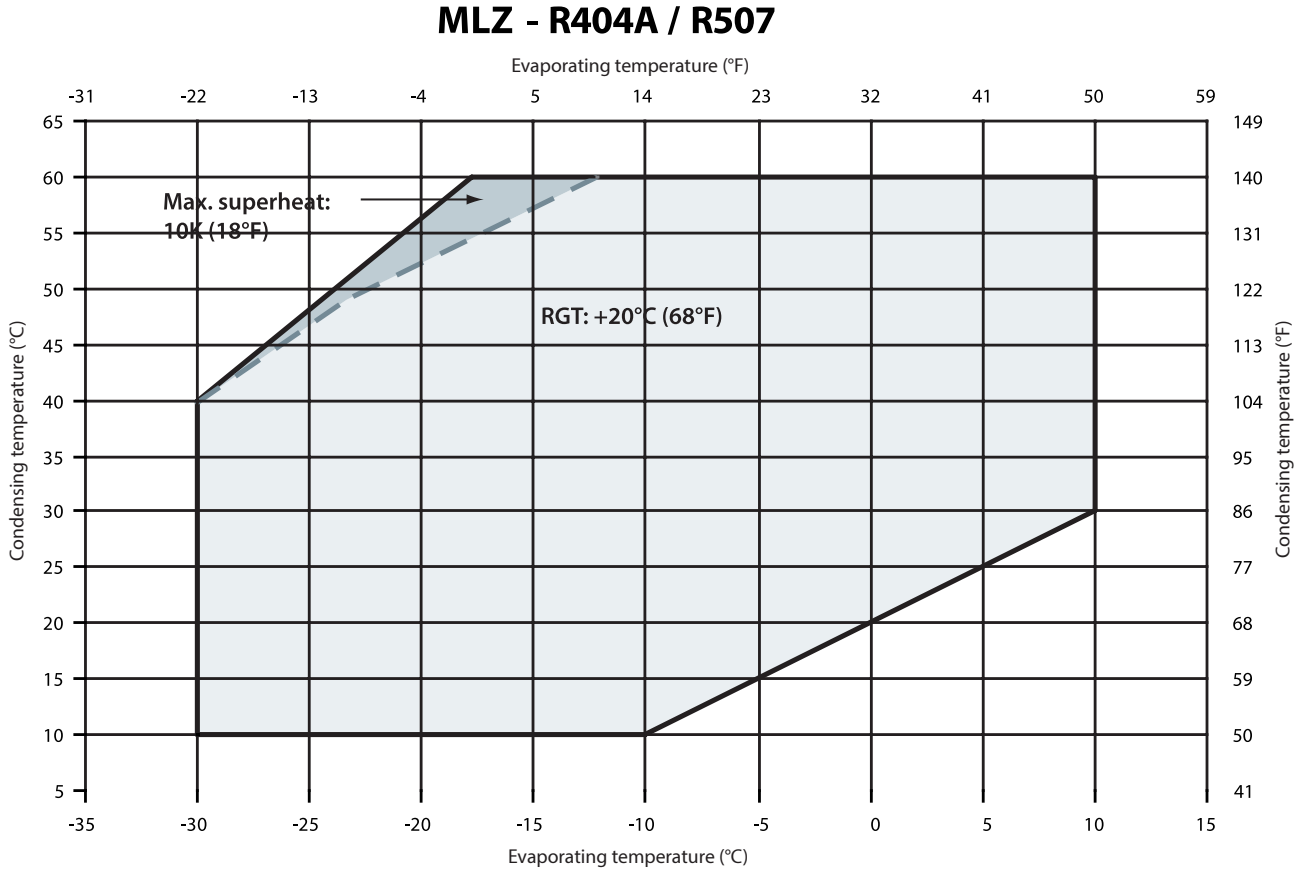

MLZ - R134a

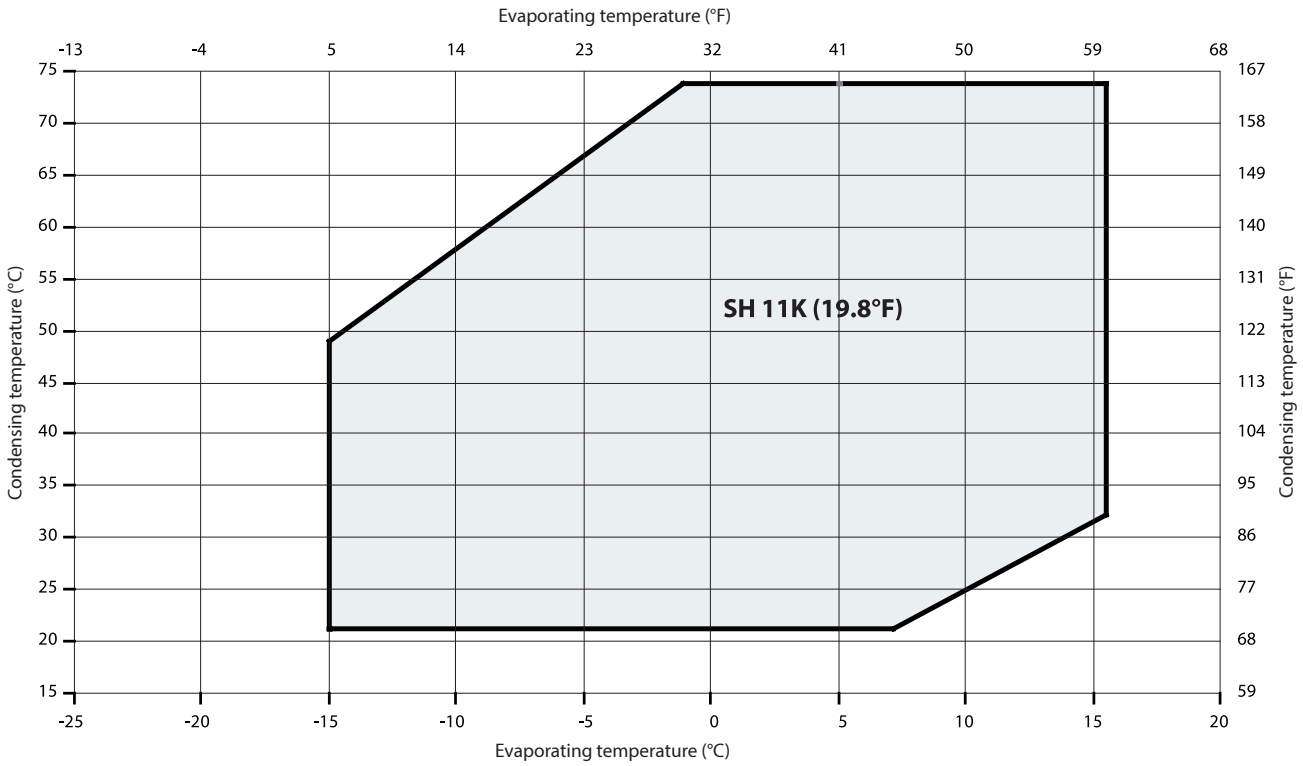

MLZ015~066 - R407A

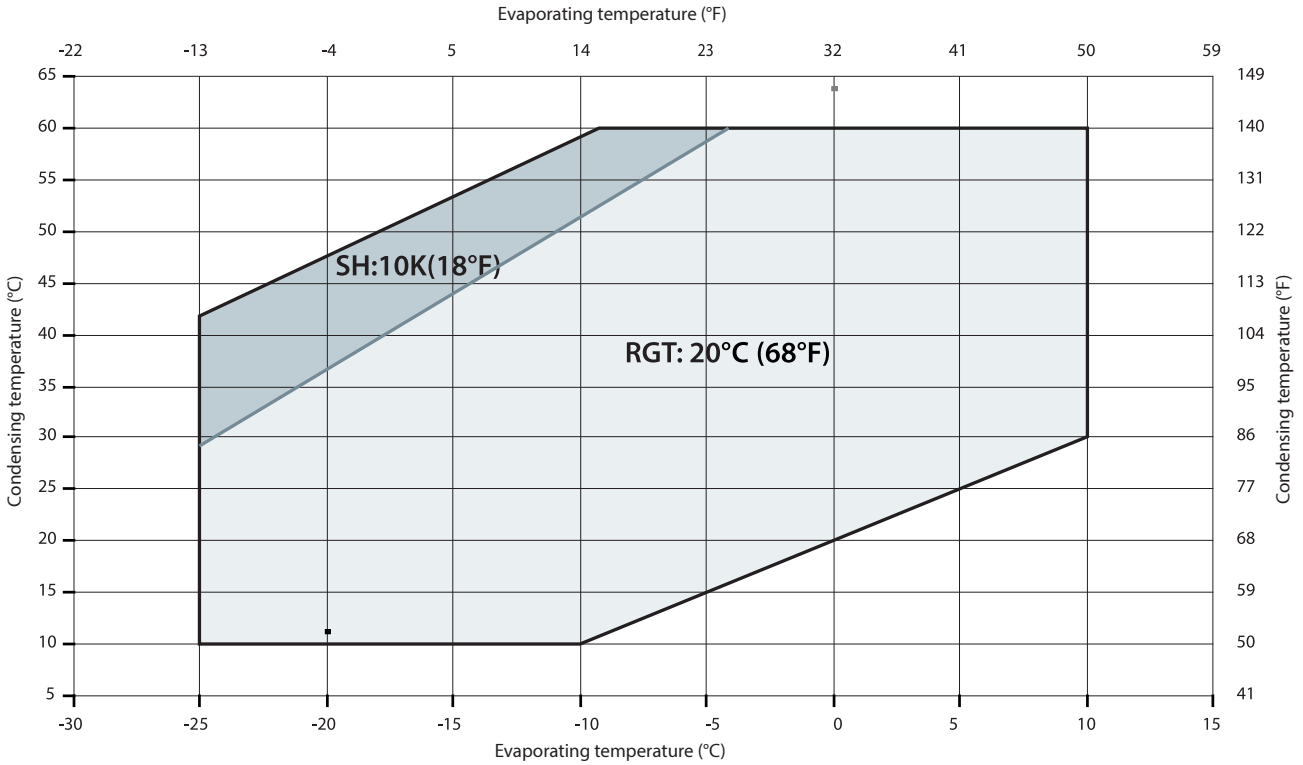

MLZ076 - R407A

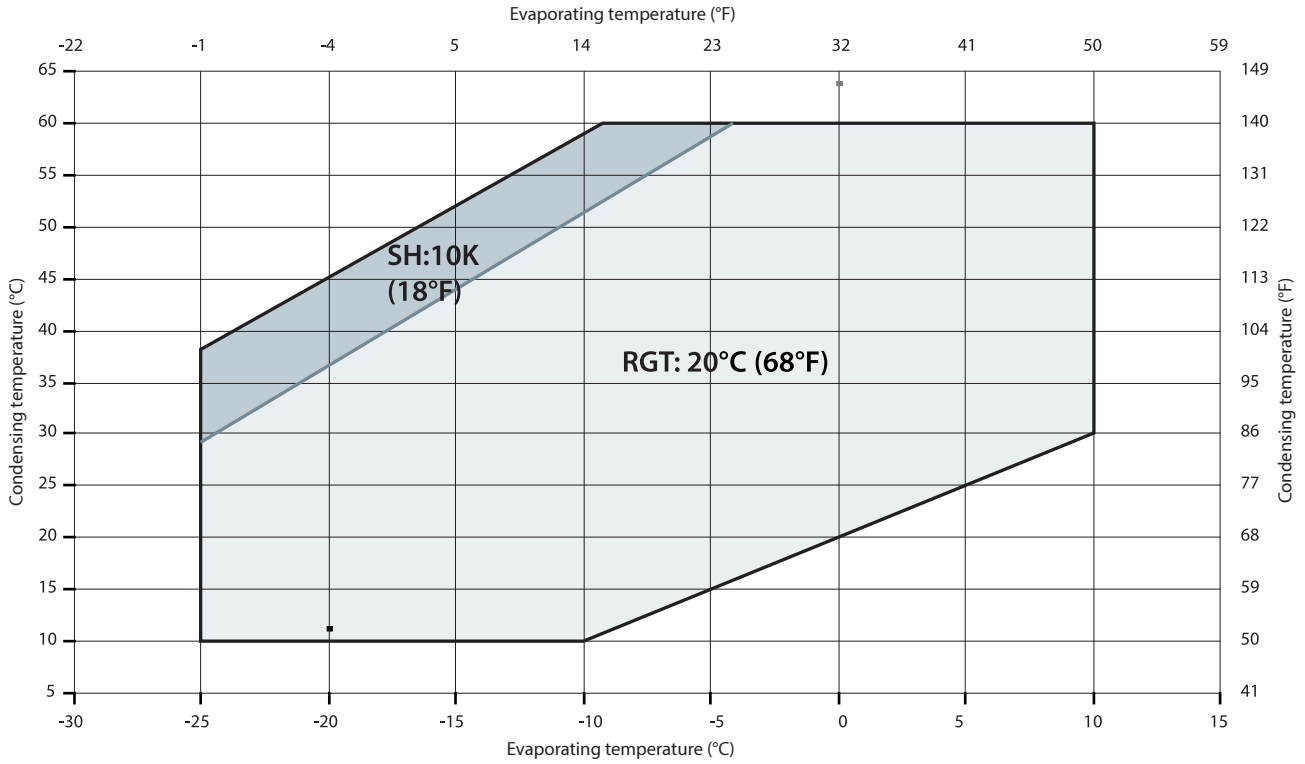

MLZ015~066 - R407F

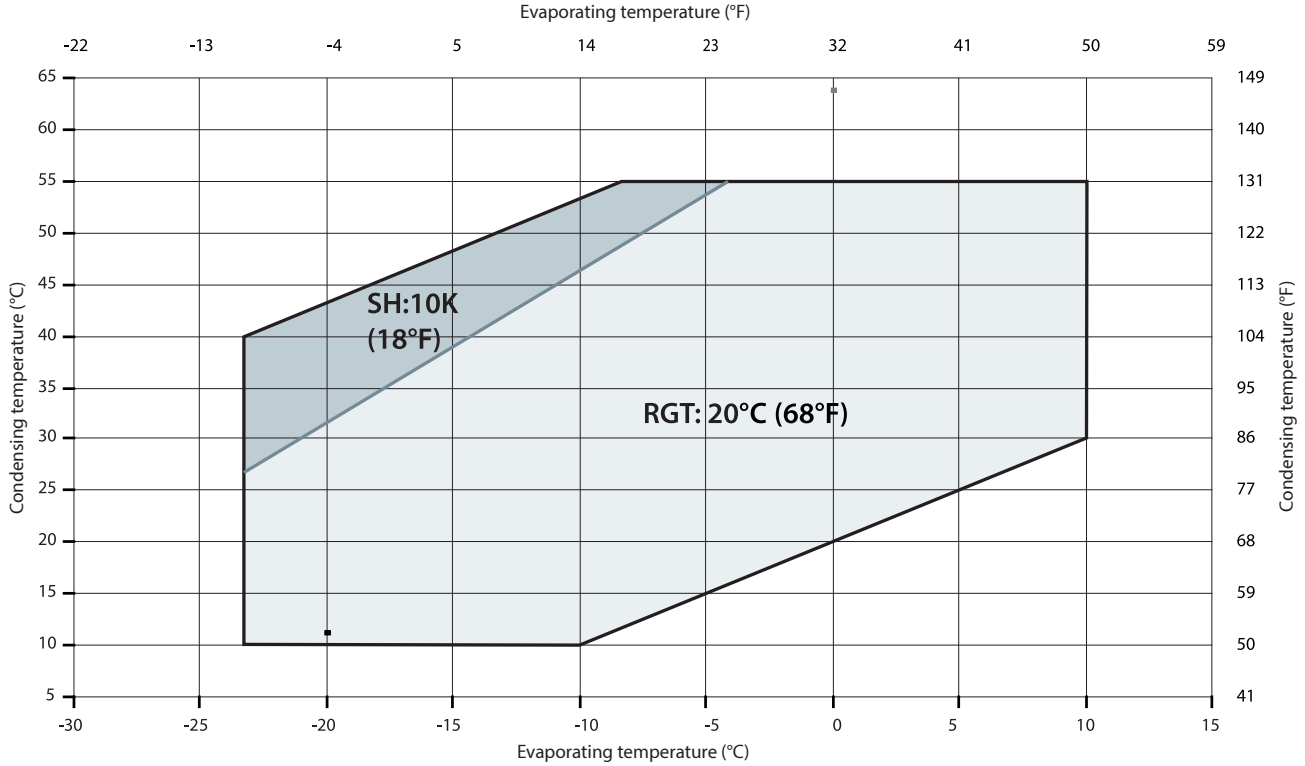

MLZ076 - R407F

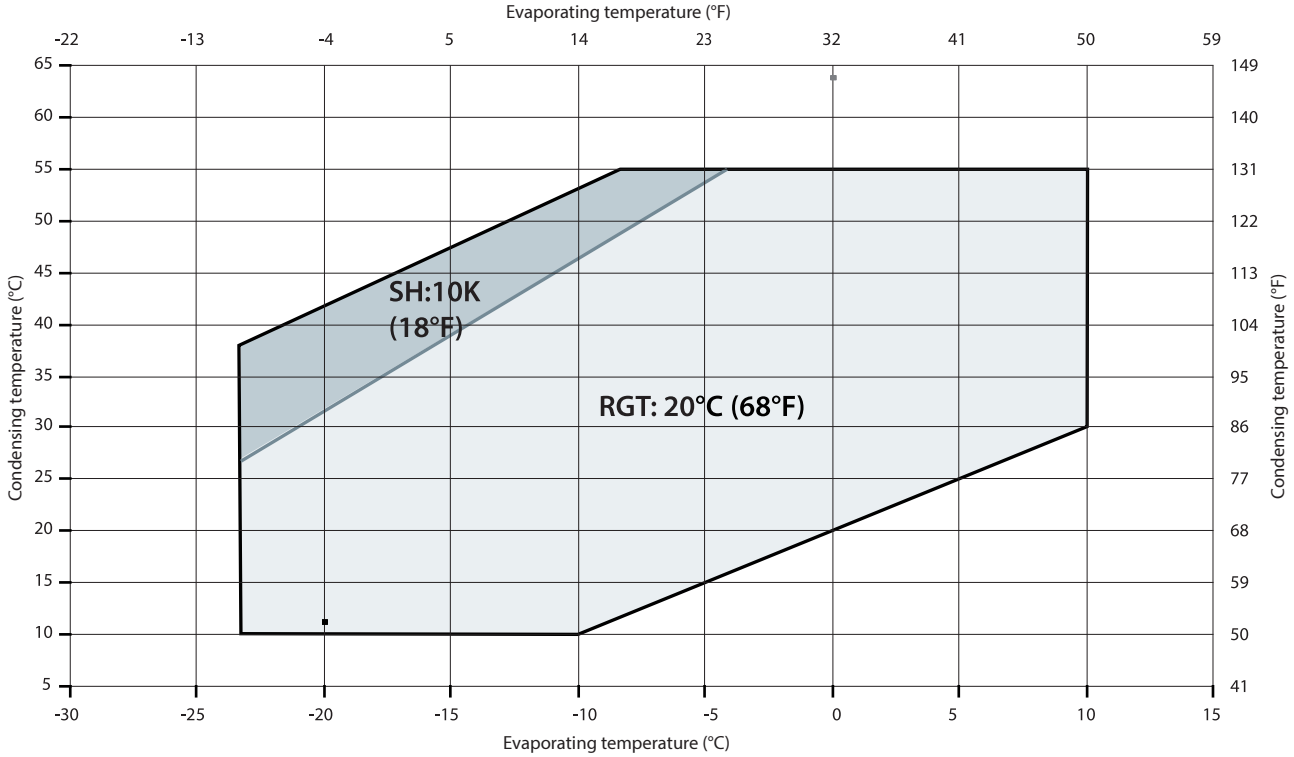

MLZ - R22

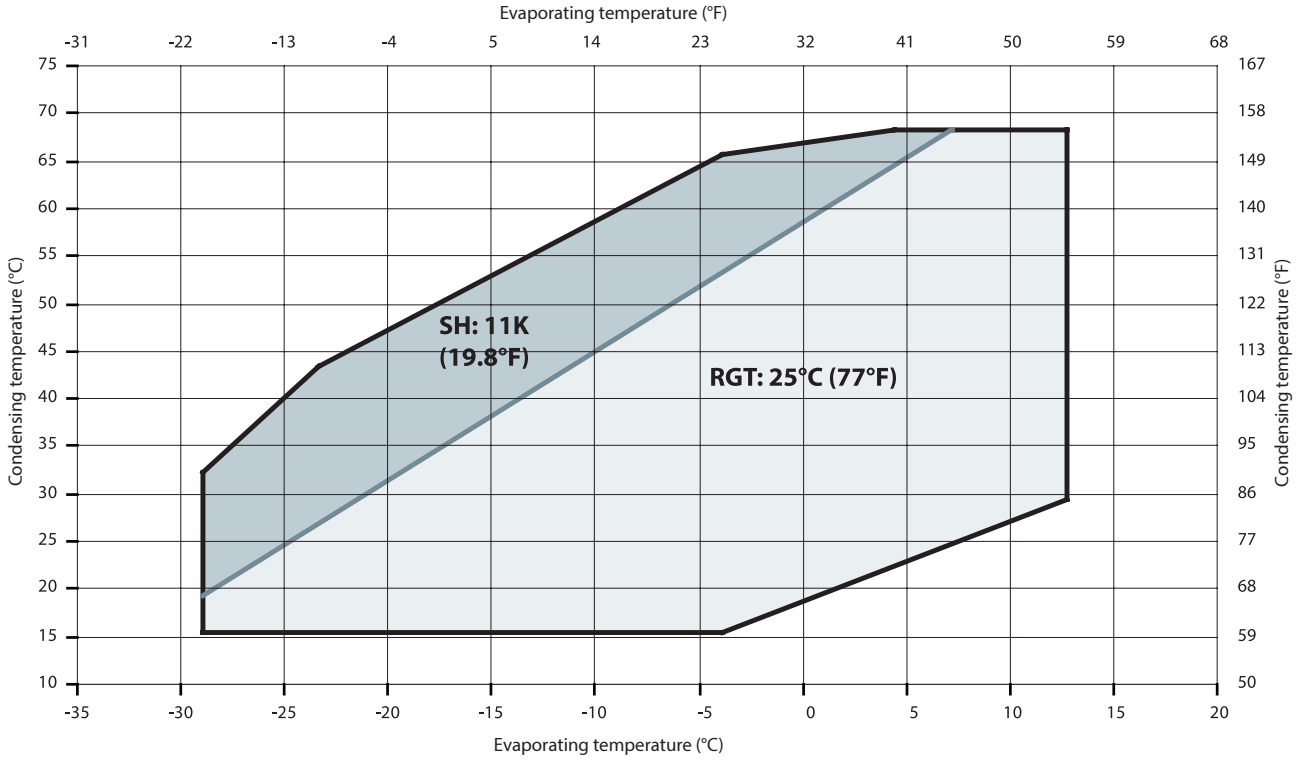

MLZ - R448A/R449A

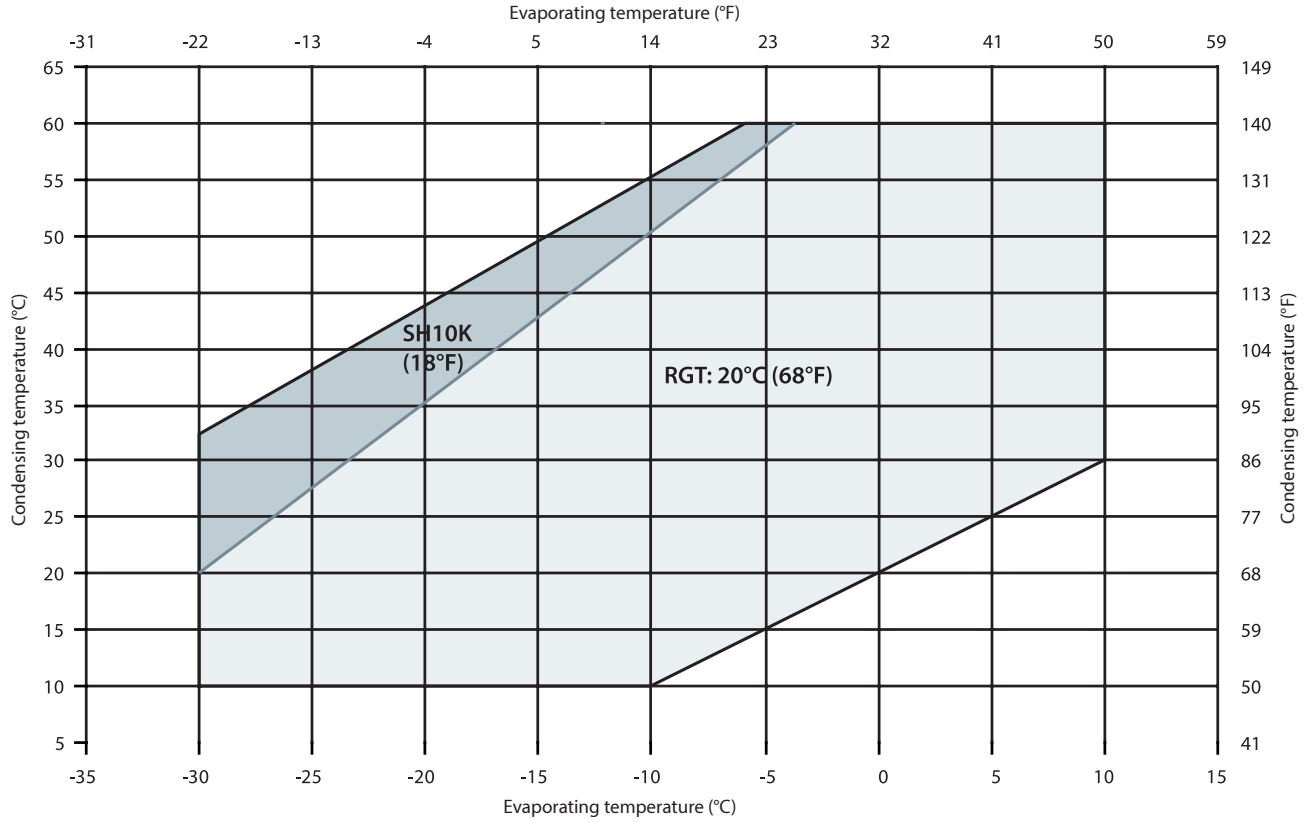

MLZ - R452A

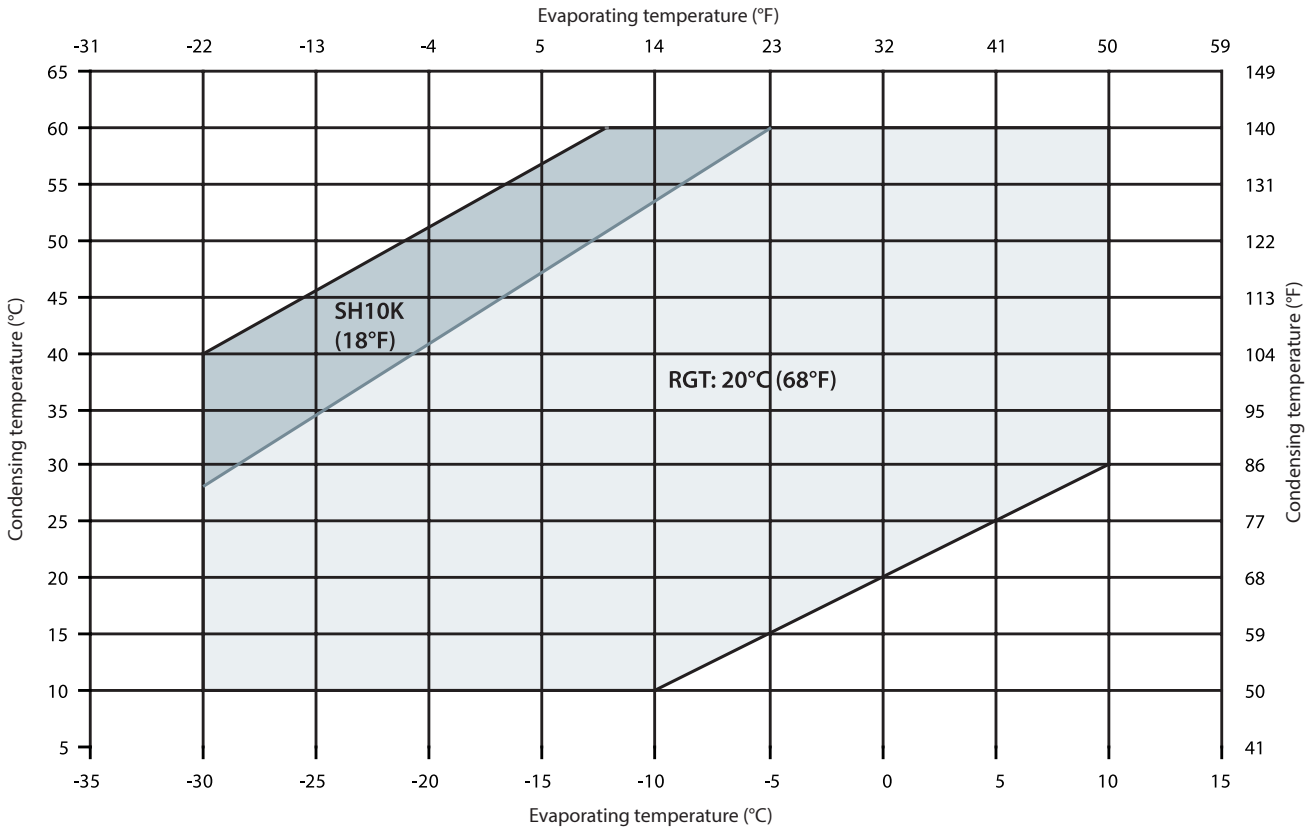

MLZ - R513A

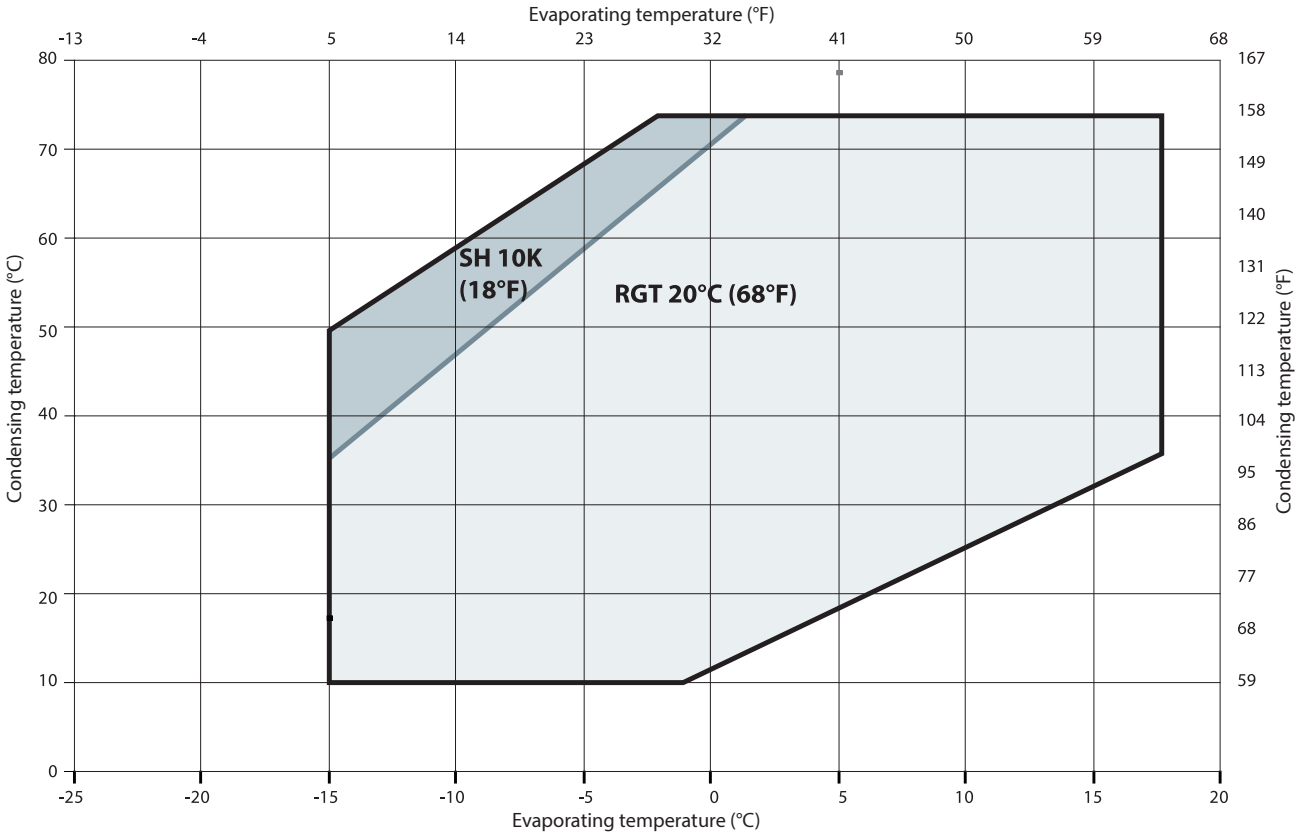
Evaporating temperature (°F)
-13
-4
5
14
23
32
41
50
59
68
Condensing temperature (°C)
80
70
60
50
40
30
20
10
0
Condensing temperature (°F)
167
158
149
140
131
122
113
104
95
86
77
68
59
SH 10K
(18°F)
RGT 20°C (68°F)
-25
-20
-15
-10
-5
0
5
10
15
20
Evaporating temperature (°C)

R454C - MLZ

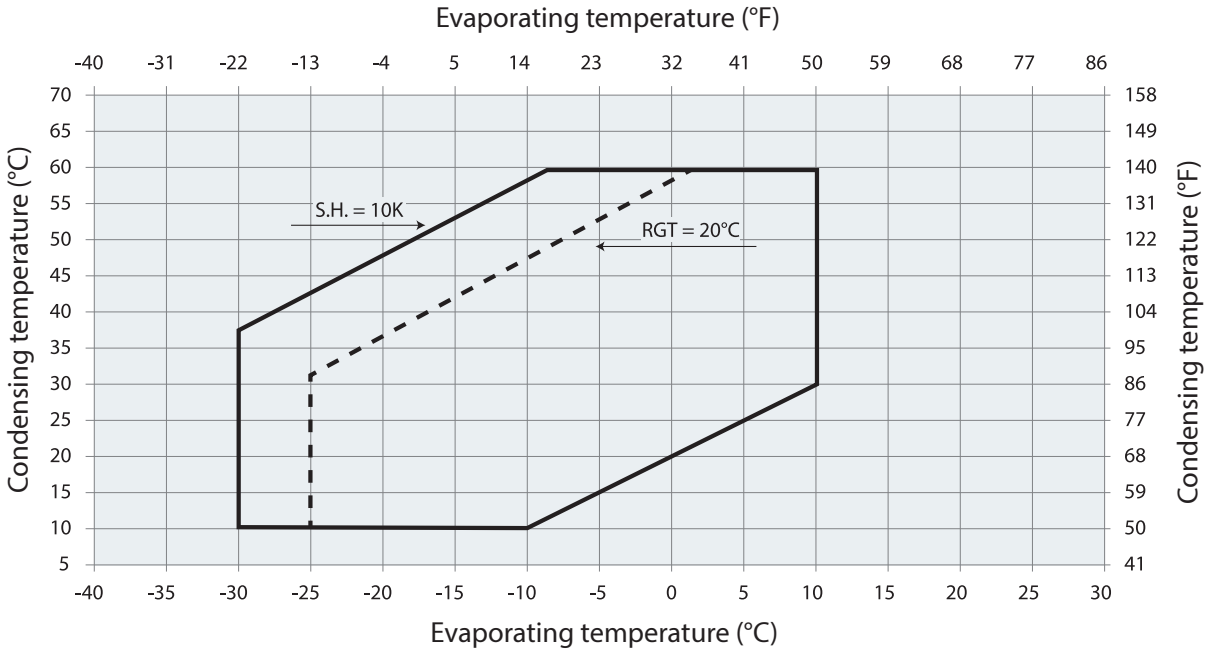

R455A -MLZ

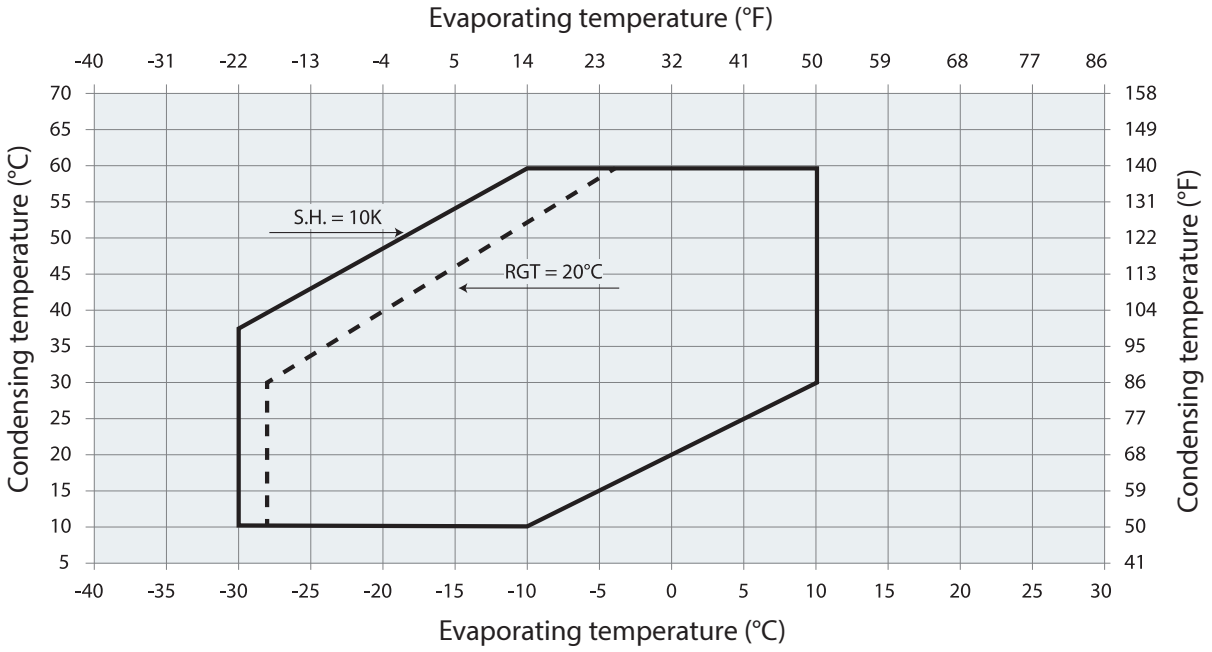

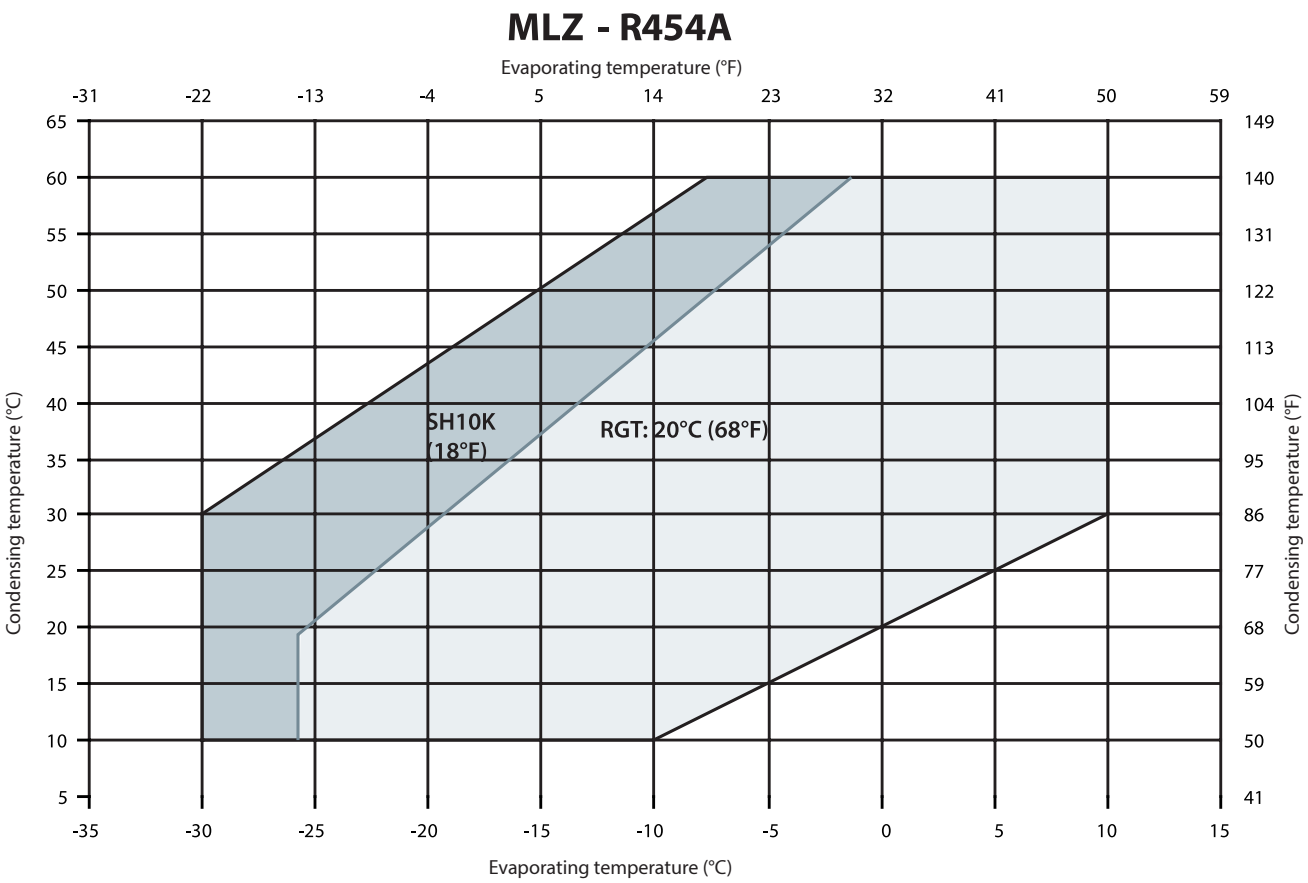

Maximum discharge gas temperature

The discharge temperature depends mainly on the combination of evaporating temperature, condensing temperature and suction gas superheat. Discharge gas temperature should be controlled with an isolated thermocouple or thermostat attached to the discharge line 15 cm (6 inches) from the compressor shell. Maximum discharge gas temperature must not exceed 135 °C (275 °F) when the compressor is running within the approved operating envelope.

Discharge gas temperature protection (DGT)

DGT protection is required if the high and low pressure switch settings do not protect the compressor against operations beyond its specific application envelope. Please refer to the examples below, which illustrate where DGT protection is required (n°1) and where it is not (n°2).

The compressor must not be allowed to cycle on the discharge gas thermostat. Continuous operations beyond the compressor's operating range will cause serious damage to the compressor!

A DGT accessory is available from Danfoss: refer to section "Spare parts & accessories".

Figure: Discharge temperature protection

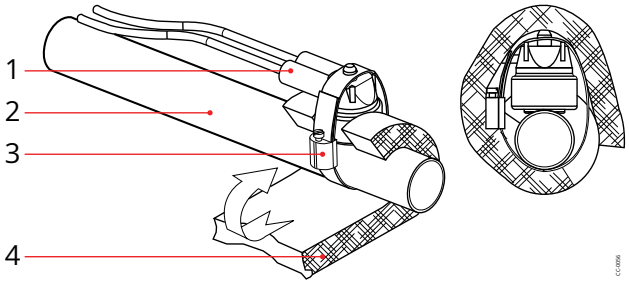

1	Thermostat or temperature sensor
2	Discharge line
3	Bracket
4	Insulation

High and low pressure protection

		R22	R404A	R134a	R407A	R407F	R448A/449 A	R452A	R513A	R454C	R455A	R454A
Working pressure range high side	bar (g)	7.0 – 27.9	7.2 – 27.7	4.9 – 22.1	6.0 – 25.6	6.3 – 23.9	6.1 – 26.0	6.5 – 26.4	3.3 – 21.5	5.2 – 22.3	5.6 – 24.3	6.5 – 26.9
	psi (g)	102 – 405	104 – 395	71.2 – 321	87 – 371	91.3 – 347)	88.2 – 522.4	94.9 – 382.3	47.9 – 312	75.4 – 323.4	81.2 – 352.4	94.6 – 390.5
Working pressure range low side	bar (g)	0.7 – 6.4	1.0 – 7.2	0.6 – 4.0	0.9 – 6.0	1.1 – 6.3	0.6 – 6.1	0.8 – 6.5	0.7 – 4.5	0.4 – 5.2	0.5 – 5.6	0.8 – 6.5
	psi (g)	10.3 – 92.8	15.1 – 104	9.3 – 58	13 – 87	16 – 91.3	8.7 – 88.2	11.1 – 94.9	10.2 – 65.3	5.8 – 75.4	7.3 – 81.2	11.1 – 94.6
Maximum high pressure safety switch setting	bar (g)	29.8	29.7	23.6	26.8	25.1	28.0	28.0	23.0	24	26	28.6
	psi (g)	432	431	342	389	364	406	406	334	348	377	419.1
Minimum low pressure safety switch setting [1]	bar (g)	0.5	0.8	0.5	0.7	0.9	0.4	0.5	0.5	0.3	0.3	0.5
	psi (g)	7.4	11.6	6.5	10.1	13	5.8	7.4	7.4	4.4	4.4	7.4
Recommended pump-down switch settings	1.5 bar (7.3 psi) below nominal evaporating pressure											
Minimum low pressure pump-down switch settings	bar (g)	0.9	1.3	0.9	0.9	1.1	0.82	0.9	0.9	0.6	0.7	0.9
	psi (g)	13	19	13	13	16	11.9	13	13	8.7	10.2	13
Maximum testing pressure	bar (g)	31	31	31	31	31	31	31	31	31	31	31
	psi (g)	450	450	450	450	450	450	450	450	450	450	450

[1] LP safety switch shall never have time delay.

High pressure

MLZ015-048 scroll compressors are equipped with an internal pressure relief valve (IPRV), for protection against blocked condenser and fan failure conditions (IPRV setting 27 – 34 bar (464 psi ± 58) differential pressure HP / LP). Still, a high pressure (HP) safety switch is recommended.

MLZ058-076 scroll compressors are not equipped with an internal pressure relief valve; therefore a high pressure switch is required to shut down the compressor should the discharge pressure exceed the values shown in the table above.

The high-pressure switch can be set to lower values depending on the application and ambient conditions. The HP switch must either be placed in a lockout circuit or consist of a manual reset device to prevent cycling around the high-pressure limit. If a discharge valve is used, the HP switch must be connected to the service valve gauge port, which must not be isolated.

Low pressure

A low pressure (LP) safety switch is recommended. MLZ scroll compressors exhibit high volumetric efficiency and may draw very low vacuum levels, which could induce scroll instability and electrical arcing at the internal cluster. The minimum low-pressure safety switch setting is given in the above table. For systems without pump-down, the LP safety switch must either be a manual lockout device or an automatic switch wired into an electrical lockout circuit. The LP switch tolerance must not allow for vacuum operations of the compressor. LP switch settings for pump-down cycles with automatic reset are also listed in the table above.

On/off cycling (cycle rate limit)

Depending on the application, a number higher than 12 starts per hour can reduce the service life of the motor-compressor unit. A one-minute time out is recommended.

The system must be designed in a way that provides a minimum compressor running time of 2 minutes so as to provide for sufficient motor cooling after start-up along with proper oil return. Note that the oil return may vary since it depends upon system design.

Danfoss recommends a restart delay timer to limit compressor cycling.

Dimensions

MLZ015-019-021-026

Brazed

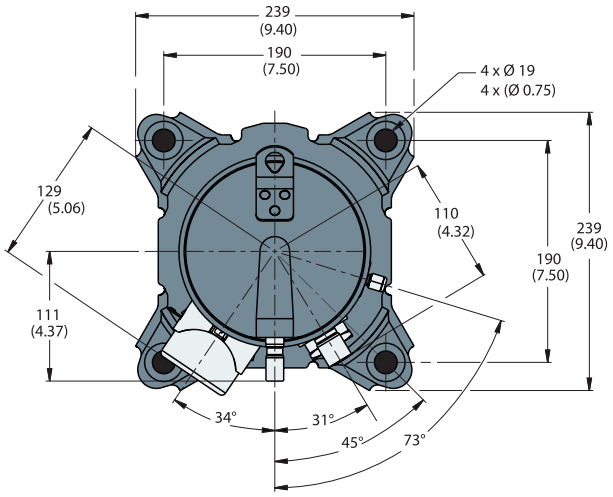

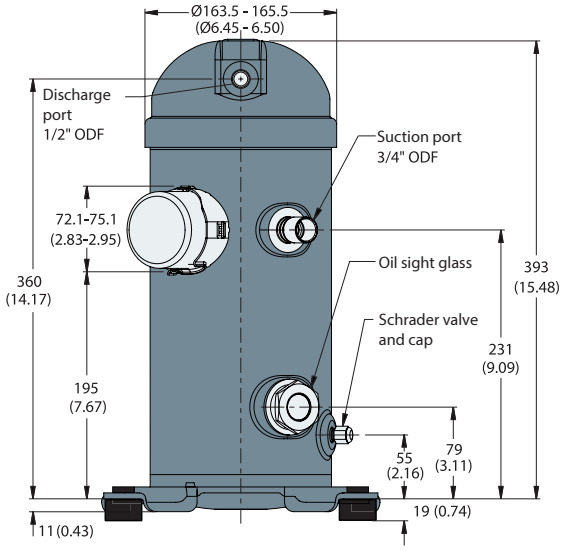

All dimensions in mm (inch)

Rotolock

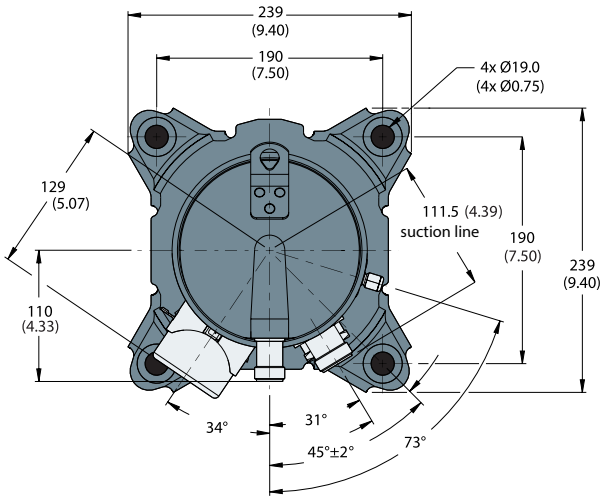

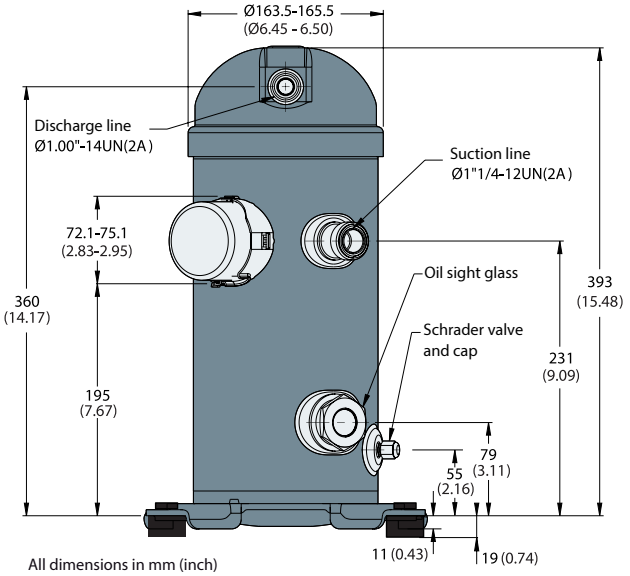

All dimensions in mm (inch)

Terminal box P & T (spade terminals)

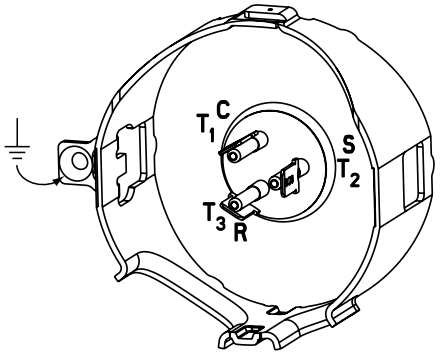

P & T terminal box type

Mounting grommet

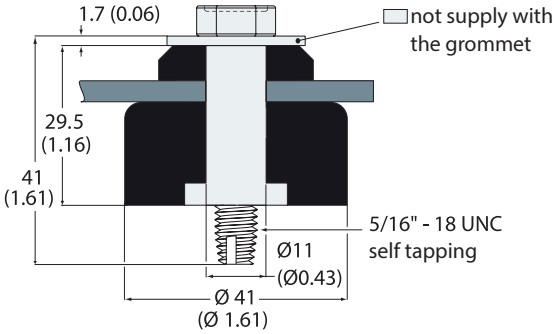

Recommended torque for mounting bolts:
11Nm (±1Nm)

Refer to section "Ordering information and packaging" for overview of shipped mounting accessories

MLZ030-038-042-045-048

Brazed

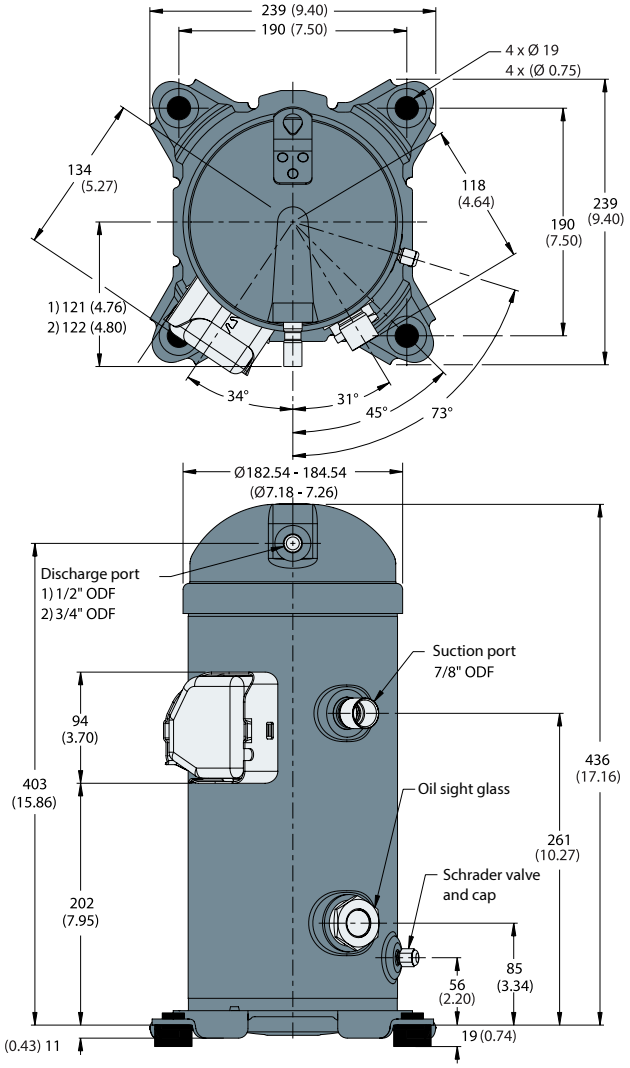

1) MLZ 030-038-042-045
2) MLZ 048

All dimensions in mm (inch)

Rotolock

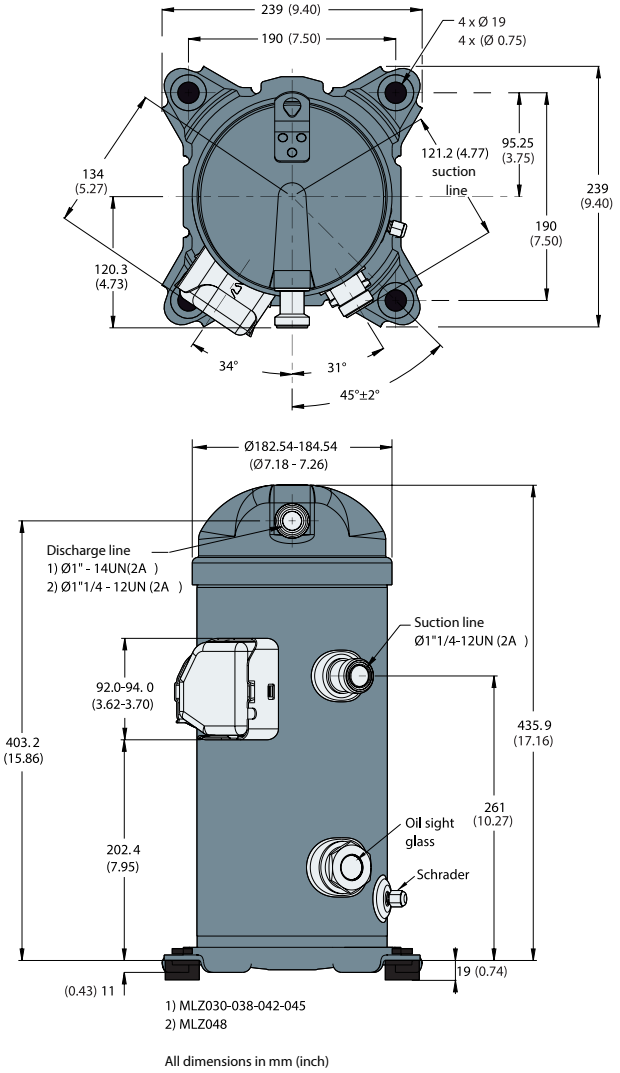

1) MLZ030-038-042-045
2) MLZ048

All dimensions in mm (inch)

Terminal box C & Q (screw terminals)

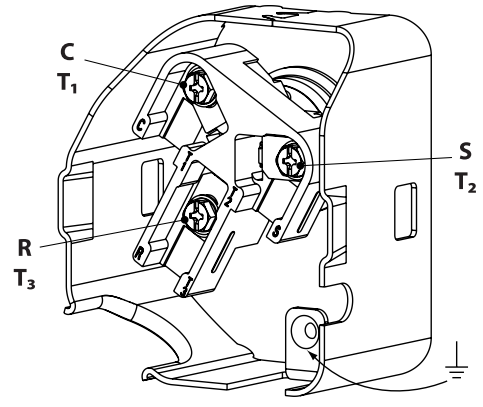

C & Q terminal box type

Mounting grommet

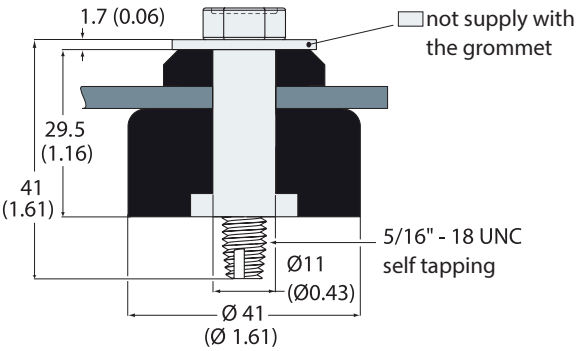

Recommended torque for mounting bolts:
11Nm (±1Nm)

Refer to section "Ordering information and packaging" for overview of shipped mounting accessories

MLZ058-066-076

Brazed

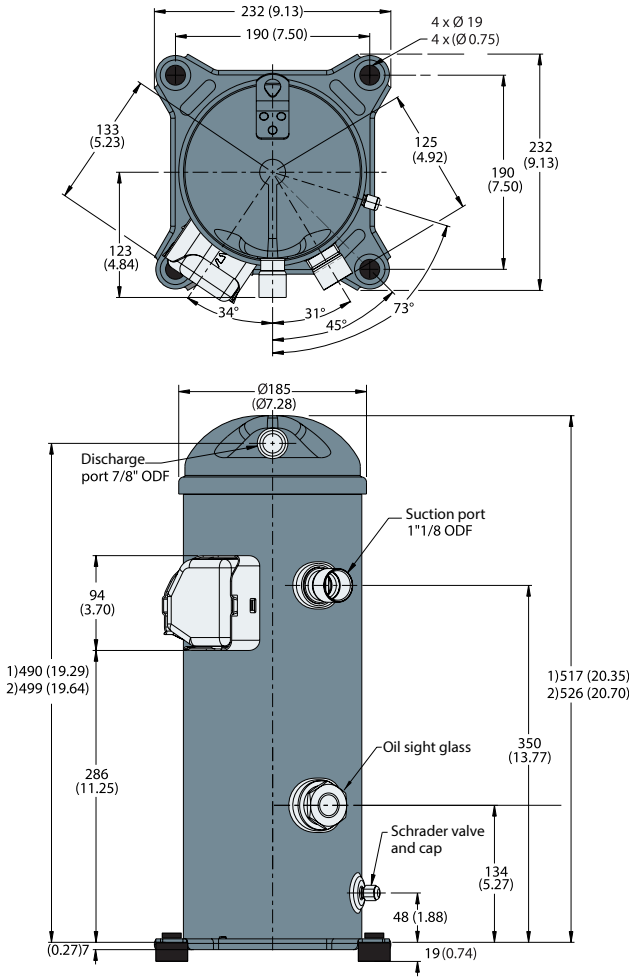

1)MLZ 058
2)MLZ 066-076

All dimensions in mm (inch)

Rotolock

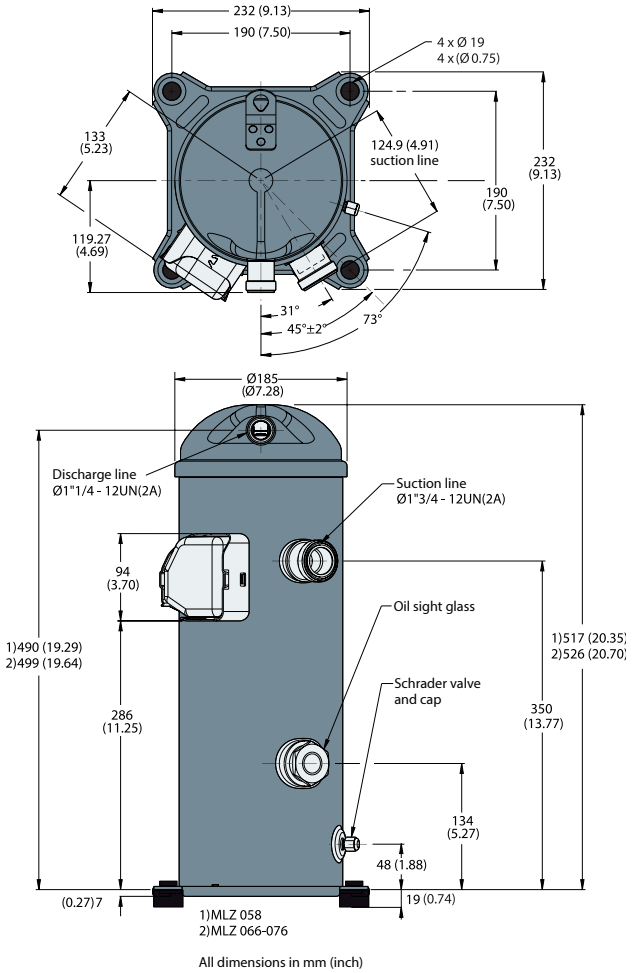

1)MLZ 058
2)MLZ 066-076

All dimensions in mm (inch)

Terminal box C & Q (screw terminals)

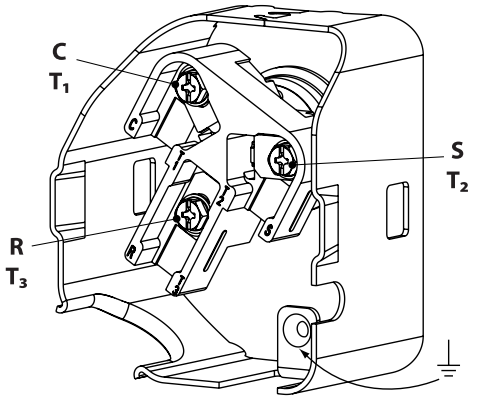

C & Q terminal box type

Mounting grommet

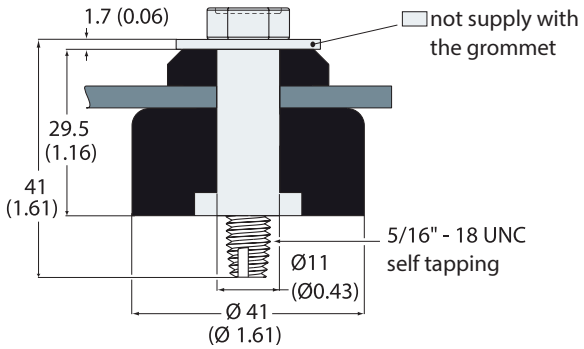

Recommended torque for mounting bolts:
11Nm (±1Nm)

Refer to section "Ordering information and packaging" for overview of shipped mounting accessories

Mechanical connections

Connection details

Suction and discharge connections

MLZ scroll compressors are factory delivered with brazed connections only. Dedicated rotolock adaptors and adaptor sets are available as accessory.

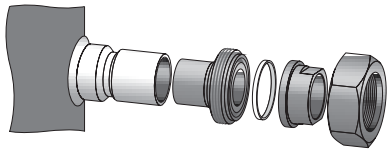

Compressor models	Brazed connection size		Rotolock adaptor set (adaptor, gasket, sleeve, nut)			Rotolock adaptor (adaptor only)
			Rotolock	Solder sleeve ODF	Code Number	Code Number
MLZ 015-019-021-026	Suction	3/4"	1-1/4"	3/4"	120Z0126	120Z0366
	Discharge	1/2"	1"	1/2"		120Z0365
MLZ 030-038-045	Suction	7/8"	1-1/4"	7/8"	120Z0127	120Z0367
	Discharge	1/2"	1"	1/2"		120Z0365
MLZ 048	Suction	7/8"	1-1/4"	7/8"	120Z0128	120Z0367
	Discharge	3/4"	1-1/4"	3/4"		120Z0366
MLZ 058-066-076	Suction	1-1/8"	1-3/4"	1-1/8"	120Z0129	120Z0364
	Discharge	7/8"	1-1/4"	7/8"		120Z0367

Tightening torque for rotolock connection: 90 Nm ± 20 (66.4 lb.ft ±14.75)

Oil sight glass

MLZ scroll compressors come equipped with a threaded oil sight glass with 1"1/8 - 18 UNEF connection. It can be used for a visual check of the oil amount and condition or it may be replaced by an accessory oil management device. The oil level must be visible in the sight glass during operation.

Torque requirement= 52.5 ± 2.5 Nm (38.7 ± 1.8 lb.ft)

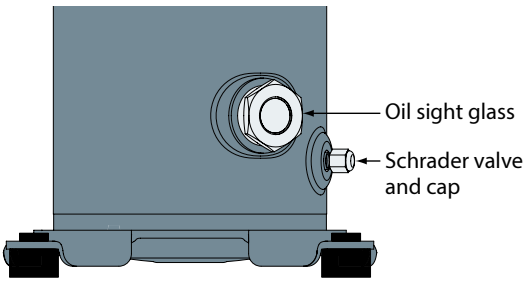

Schrader

The oil fill and drain connection and gauge port is a 1/4" male flare connector incorporating a schrader valve.

Torque requirements:
Schrader valve core: 0.6 ± 0.2 Nm (0.44 ± 0.14 lb.ft)
Schrader valve cover: 14.5 ± 1 Nm (10.7 ± 0.7 lb.ft)

Design piping

General

Successful application of scroll compressors is dependent on careful selection of the compressor for the application. If the compressor is not correct for the system, it will operate beyond the limits given in this manual. Poor performance, reduced reliability, or both may result.

Essential piping design considerations

Proper piping practices should be employed to ensure adequate oil return, even under minimum load conditions with special consideration given to the size and slope of the tubing coming from the evaporator. Tubing returns from the evaporator should be designed so as not to trap oil and to prevent oil and refrigerant migration back to the compressor during off-cycles.

If the evaporator lies above the compressor the addition of a pump-down cycle is strongly recommended. If a pump-down cycle were to be omitted, the suction line must have a loop at the evaporator outlet to prevent refrigerant from draining into the compressor during off-cycles.

If the evaporator were situated below the compressor, the suction riser must be trapped to ensure the oil return to the compressor (see fig.1).

When the condenser is mounted at a higher position than the compressor, a suitably sized "U"-shaped trap close to the compressor is necessary to prevent oil leaving the compressor from draining back to the discharge side of the compressor during off cycle. The upper loop also helps avoid condensed liquid refrigerant from draining back to the compressor when stopped (see fig. 2). The maximum elevation difference between the indoor and outdoor section cannot exceed 8 m. System manufacturers should specify precautions for any applications that exceed these limits to ensure compressor reliability.

Piping should be designed with adequate three-dimensional flexibility (figure 2). It should not be in contact with the surrounding structure, unless a proper tubing mount has been installed. This protection proves necessary to avoid excess vibration, which can ultimately result in connection or tube failure due to fatigue or wear from abrasion. Aside from tubing and connection damage, excess vibration may be transmitted to the surrounding structure and generate an unacceptable sound level within that structure as well (for more information on sound and vibration, see the section on: "Sound and vibration management").

fig. 1

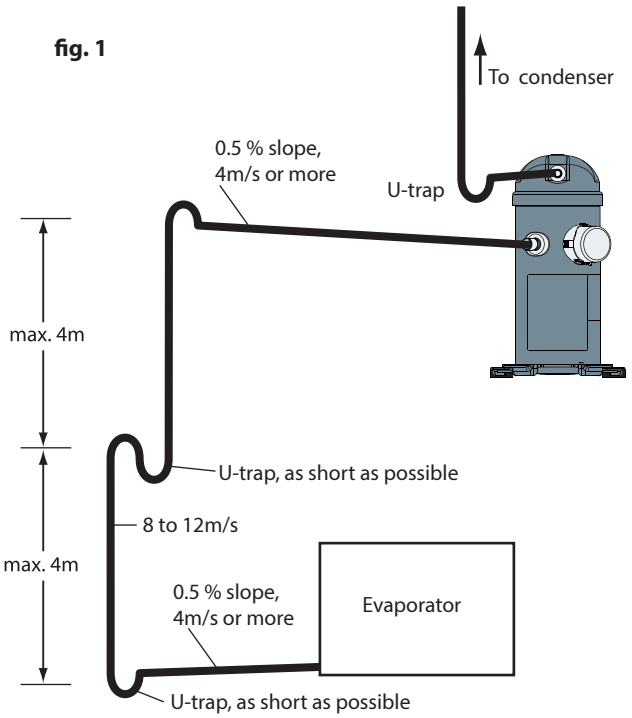

fig. 2

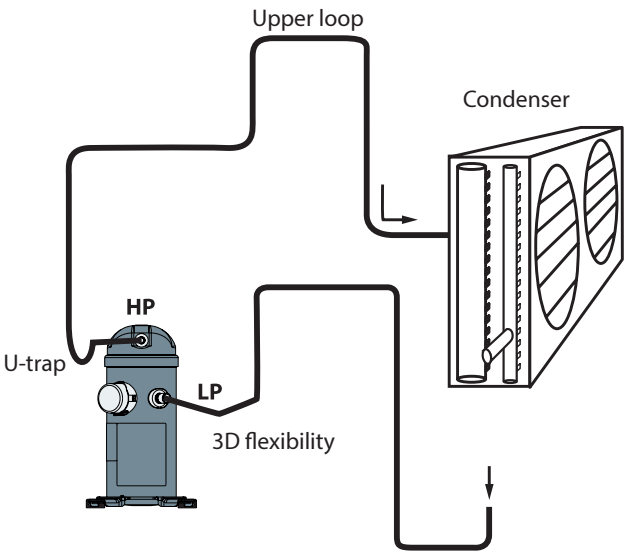

Electrical connections

Motor voltage

MLZ scroll compressors are available in 6 different motor voltages.

	Motor voltage code 1	Motor voltage code 2
Nominal voltage 50 Hz	–	200 – 220 V – 3 ph
Voltage range 50 Hz	–	180 – 242 V
Nominal voltage 60 Hz	208 – 230 V – 1 ph	208 – 230 V – 3 ph
Voltage range 60 Hz	187 – 253 V	187 – 253 V

Wiring connections

MLZ scroll compressors will only compress gas while rotating counter-clockwise (when viewed from the compressor top). Since single-phase motors will start and run in only one direction, reverse rotation is not a major consideration. Three-phase motors, however, will start and run in either direction, depending on the phase angles of the supplied power. Care must be taken during installation to ensure that the compressor operates in the correct direction (see "Phase sequence and reverse rotation protection").

The drawings below show electrical terminal labelling and should be used as a reference when wiring the compressor. For three phase applications, the terminals are labelled T1, T2, and T3. For single-phase applications the terminals are labelled C (common), S (start), and R (run).

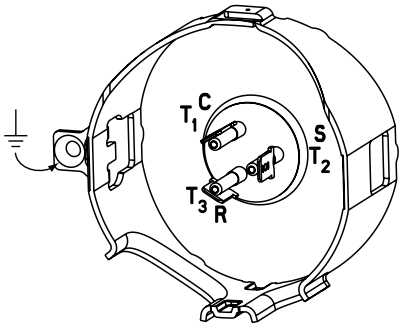

P & T terminal box type

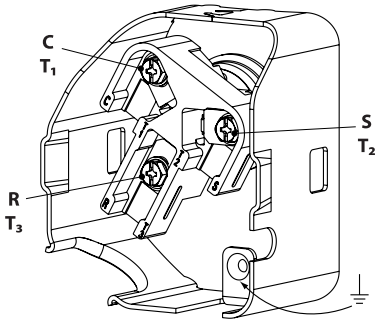

C & Q terminal box type

Terminal cover mounting

The terminal cover and gasket should be installed prior to operation of the compressor. Respect the "up" marking on gasket and cover and ensure that the two outside tabs of the cover engage the terminal box.

Terminal cover removal

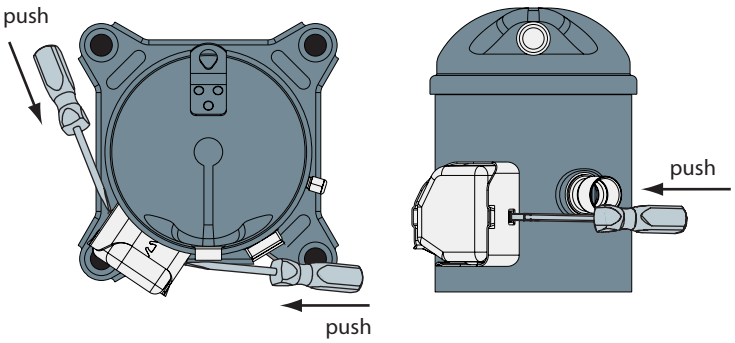

IP rating

The compressor terminal box IP rating according to IEC 529 is **IP22** for all models. IP ratings is only valid when correctly sized cable glands of the IP rating is applied.

- First numeral, level of protection against contact and foreign objects
  2 protections against object size over 12.5 mm (1/2 inch) (fingers of similar)
- Second numeral, level of protection against water
  2 protections against dripping water when tilted up to 15°
  The IP rating can be upgraded to IP54 with accessory kit (see section Spare parts & Accessories).

Electrical specifications

Three phase electrical characteristics

Compressor model		LRA	MCC	Max Oper A	Winding resistance (Ohm)		
		A	A	A	T1 – T3	T1 – T2	T2 – T3
Motor voltage code 2 200 – 220 V / 3 ph / 50 Hz 208 – 230 V / 3 ph / 60 Hz	MLZ015T2	60	14.5	9.9	1.23	1.67	1.67
	MLZ019T2	95	20.0	13.3	0.87	1.18	1.18
	MLZ021T2	95	20.0	13.6	0.87	1.18	1.18
	MLZ026T2	95	22.0	16.6	0.87	1.18	1.18
	MLZ030T2	120	26.0	19.7	0.67	0.67	0.68
	MLZ038T2	123	26.0	23.5	0.60	0.60	0.61
	MLZ045T2	170	30.0	28.2	0.48	0.46	0.48
	MLZ048T2	190	37.0	30.6	0.43	0.44	0.43
	MLZ058T2	190	40.0	36.1	0.37	0.37	0.37
	MLZ066T2	235	46.0	40.7	0.32	0.32	0.33
	MLZ076T2	235	50.0	47.6	0.32	0.32	0.33

Single phase electrical characteristics

Compressor model		LRA	MCC	Max Oper A	Winding resistance (Ohm)	
		A	A	A	T1 – T3	T1 – T2
Motor code 1 208 – 230 V / 1ph / 60 Hz	MLZ015T1	69	19.0	16.0	0.84	1.70
	MLZ019T1	97	25.0	23.7	0.67	1.57
	MLZ021T1	97	24.5	21.4	0.67	1.57
	MLZ026T1	115	31.5	29.5	0.55	1.47
	MLZ030T1	150	38.0	31.9	0.34	0.90
	MLZ038T1	160	45.0	37.2	0.28	1.76
	MLZ042T1	189	60.0	46.6	0.23	0.69

LRA (Locked Rotor Amp)

LRA is the higher average current as measured on a mechanically blocked compressor tested under nominal voltage. LRA is printed on the nameplate.

The LRA value can be used as a rough estimation for the starting current. However in most cases, the real starting current will be lower. Many countries have defined limits for the starting current in domestic use. A soft starter can be applied to reduce starting current.

MCC (Maximum Continuous Current)

The MCC is the current at which the internal motor protection trips under maximum load and low voltage conditions.

This MCC value is the maximum at which the compressor can be operated in transient conditions and out of the application envelope. Above this value the overload will switch off to protect the motor.

Max Oper. A (Maximum Operating Amp)

The Max Oper. A is the current when the compressor operates at maximum load conditions and 10% below nominal voltage.

This value which is the max rated load current for the compressor is new on the nameplate.

Max Oper. A can be used to select cables and contactors.

In normal operation, the compressor current consumption is always less than the Max Oper. A value. When using the Max Operating Current to define cables and contactors, a tolerance of +5% need to be taken into account.

Winding resistance

Winding resistance is the resistance between indicated terminal pins at 25 °C (77 °F) (resistance value +/- 7%).

Winding resistance is generally low and it requires adapted tools for precise measurement. Use a digital ohm-meter, a '4 wires' method and measure under stabilised ambient temperature. Winding resistance varies strongly with winding temperature; If the compressor is stabilised at a different value than 25 °C (77 °F), the measured resistance must be corrected with following formula:

$$R_{tamb} = R_{25^\circ C(77^\circ F)} \frac{a+t_{amb}}{a+t_{25^\circ C(77^\circ F)}}$$

$t_{25°C}$	reference temperature = 25 °C (77 °F)
t_{amb}	temperature during measurement °C (°F)
$R_{25\,°C\,(77\,°F)}$	winding resistance at 25 °C (77 °F)
R_{amb}	winding resistance at t_{amb}
coefficient a	Coefficient a = 234.5

Electrical connections

MLZ single phase scroll compressors are designed to operate without any assistance. If starting within the defined voltage range, PSC wiring is sufficient.

PSC wiring

PSC wiring with a run capacitor only is the default wiring solution for single phase MLZ compressors.

The start winding (C-S) of the motor remains in circuit through a permanent (run) capacitor. This permanent (run) capacitor is connected between the start winding (S) and the run winding (R).

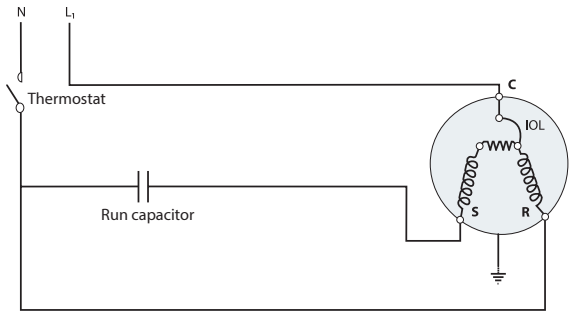

PTCSCR wiring

If the starting torque of the PSC wiring is not sufficient due to pressures not fully equalized during the off-cycle or some voltage drop during starting, the PTCSCR wiring might be an option. PTCSRC wiring provides more motor torque than PSC wiring but less than CSR wiring. The PTC is wired in parallel to the run capacitor.

When starting the compressor, the PTC, which is at low resistance, provides additional starting current to the motor's start winding. The current passing through the PTC causes it to heat up and, at a certain temperature, change to a very high resistance. At this time the motor is up to nominal speed and the run capacitor determines the current through the start winding. The PTC remains at high temperature and thus at high resistance as long as power is connected to the compressor. When the compressor is switched off, the PTC cools down to its initial low resistance and becomes available to support the next compressor start.

It is important to provide sufficient time between motor starts to allow the PTC to cool down close to ambient temperature. Depending on the ambient conditions and the cooling of the PTC, this may take about 5 minutes. A restart before the PTC is back to low resistance may be successful or the motor may stall in a locked-rotor state depending on the ambient and system's conditions. A locked-rotor state causes the internal protector to open and would cause even further delay until the overload is reset.

The following PTC types are recommended for the MLZ single phase compressors:

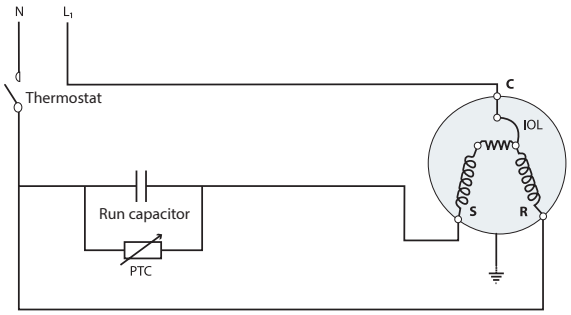

Note: MLZ compressors with PTCSCR are not approved by UL. It is the customers' responsibility to get final approval for the system when required.

CSR wiring

CSR wiring provides additional motor torque at start-up, by the use of a start capacitor in combination with the run capacitor. The start capacitor is only connected during the starting operation, a potential relay is used to disconnect it after the start sequence.

Some applications with high differential pressure and start duty as "soft serve ice cream machine" can require CSR wiring. This configuration can also be used to reduce erratic starting at unfavourable conditions such as very low ambient temperature or weak voltage.

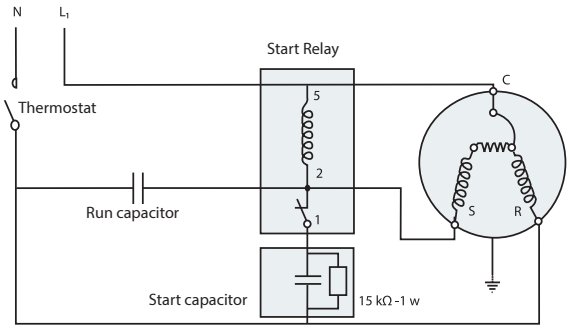

Nominal capacitor value and relays

	Compressor models	Default solution: PSC wiring with run capacitor only	Components for CSR wiring		
		PSC wiring	CSR wiring		
		Run capacitor	Start capacitor	Relay	
		µF	µF	Reference	
208 – 230 V / 1 / 60 Hz Motor voltage code 1 not provided with the compressor	MLZ015	45	145 – 175	3ARR3*3M*	RVA2ACKL
	MLZ019-021	45	145 – 175	3ARR3*3M*	RVA2ACKL
	MLZ026	60	88 – 108	3ARR3*3L*	RVA2ABKL
	MLZ030	70	161 – 193	3ARR3*3L*	RVA2ABKL
	MLZ038	55	88 – 108	3ARR3*25AS*	RVAA4IKL

Three phase

Suggested wiring diagram with "one shot" pump down cycle and safety lock-out relay

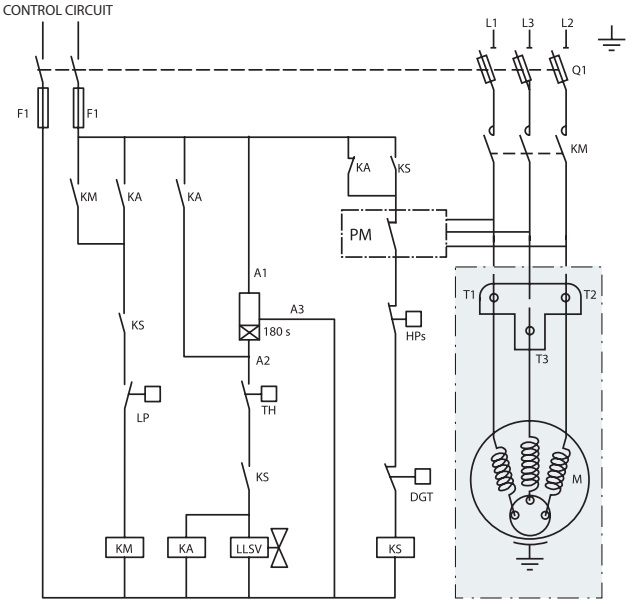

Wiring diagram with pump-down cycle

TH	Control device
180 s	Optional short cycle timer (3 min)
KA	Control relay
LLSV	Liquid Line Solenoid valve
KM	Compressor contactor
PM	Phase monitor
KS	Safety lock out relay
LP	Pump-down control low pressure switch
HPs	High pressure safety switch
Q1	Fused disconnect
F1	Fuses
M	Compressor motor
DGT	Discharge gas thermostat

Internal motor protection

MLZ scroll compressors are equipped with an internal line break protector mounted on the motor windings. The protector is an automatic reset device, containing a snap action bimetal switch.

Internal protectors respond to over-current and overheating. They are designed to interrupt motor current under a variety of fault conditions, such as failure to start, running overload, and fan failure.

If the internal overload protector trips out, it must cool down to about 60 °C (140 °F) to reset. Depending on ambient temperature, this may take up to several hours.

Phase sequence and reverse rotation protection

The compressor will only operate properly in a single direction. Use a phase meter to establish the phase orders and connect line phases L1, L2 and L3 to terminals T1, T2 and T3, respectively. For three-phase compressors, the motor will run equally well in both directions. Reverse rotation results in excessive noise; no pressure differential between suction and discharge; and suction line warming rather than immediate cooling.

A service technician should be present at initial start-up to verify that supply power is properly phased and that compressor and auxiliaries are rotating in the correct direction.

MLZ015-048 scroll compressors are designed to operate for a maximum of 150 hours in reverse, but as a reverse rotation situation can go unnoticed for longer periods, phase monitors are recommended.

For compressors MLZ058 and larger, phase monitors are required. The selected phase monitor should lock out the compressor from operation in reverse.

At brief power interruptions, reverse rotation can occur with single phase compressors. In this case the internal protector will stop the compressor. It will have to cool down and will restart safely afterwards.

Voltage imbalance

For three-phase applications the voltage measured at the compressor terminals for each phase should be within ± 2% of the average for all phases.

Application

Manage operating envelope

Operating conditions

The scroll compressor application range is influenced by several parameters which need to be monitored for a safe and reliable operation.

These parameters and the main recommendations for good practice and safety devices are explained hereunder:

- **Refrigerant and lubricants**
- **Motor supply**
- **Compressor ambient temperature**
- **Application envelope** (evaporating temperature, condensing temperature, return gas temperature)

Manage off cycle migration

Off-cycle migration

Off-cycle refrigerant migration is likely to occur when the compressor is located at the coldest part of the installation, when the system uses a bleed-type expansion device, or if liquid could migrate from the evaporator into the compressor sump by gravity. If too much liquid refrigerant accumulates in the sump it will saturate the oil and lead to a flooded start: when the compressor starts, the refrigerant evaporates abruptly under the sudden decrease of the bottom shell pressure, causing the oil to foam. In extreme situations, this might result in too much oil leaving the compressor, which must be avoided as it causes irreversible damages due to possible lack of lubrication.

MLZ scroll compressors can tolerate occasional flooded starts as long as the system has been evaluated.

A suitable test to evaluate the risk of off-cycle migration is the following:

- Stabilize the non running system at 5 °C (41 °F) ambient temperature.
- Raise the ambient temperature to 20 °C (68 °F) and keep it for 10 minutes.
- Start the compressor and monitor sump temperature, sight glass indication and sound level.

The presence of liquid in the crankcase can be easily detected by checking the sump level through the oil sight glass. Foam in the oil sump indicates a flooded start.

A noisy start, oil loss from the sump and sump cool down are indications for migration. Depending on the amount of migration graduate measures shall be taken:

- **Crankcase heater**
- **Liquid line solenoid valve**
- **Pump down cycle**

Crankcase heater:
when the compressor is idle, the oil temperature in the sump must be maintained at no lower than 10 K (18 °F) above the saturation temperature of the refrigerant on the low-pressure side. This requirement ensures that the liquid refrigerant is not accumulating in the sump. A crankcase heater is only effective if capable of sustaining this level of temperature difference. Tests must be conducted to ensure that the appropriate oil temperature is maintained under all ambient conditions (temperature and wind). Below –5 °C (23 °F) ambient temperature and a wind speed of above 5 m/sec (16 ft/s), it's recommended to thermally insulated the heaters in order to limit the surrounding energy losses.

Due to the Danfoss scroll compressor's inherent ability to handle liquid refrigerant, crankcase heaters are not required when the system charge does not exceed the recommended maximum charge.

Since the total system charge may be undefined, a crankcase heater is recommended on all systems with remote heat exchangers. In addition, any system containing a refrigerant charge in excess of the maximum recommended system charge for compressors requires a crankcase heater.

Belt-type crankcase heater accessories are available from Danfoss (see section “Spare parts & Accessories”).

The heater must be energized whenever the compressor is off.

Provide separate electrical supply for the heaters so that they remain energized even when the machine is out of service (e.g. Seasonal shutdown).

It is recommended that the heater be turned on for a minimum of 8 hours prior to starting the compressor.

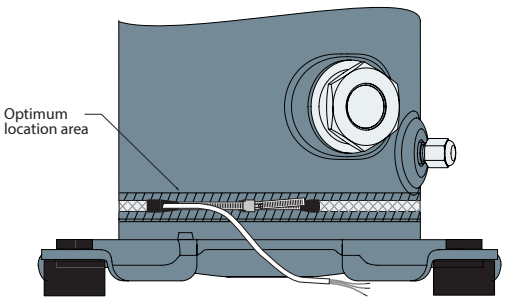

Liquid line solenoid valve (LLSV):
This feature is very convenient and can be used on all types of applications.

An LLSV is used to isolate the liquid charge in the high pressure side, thereby preventing against charge transfer or excessive migration to the compressor during off-cycles. The quantity of refrigerant remaining in the low-pressure side of the system can be further reduced by using a pump-down cycle in association with the LLSV.

Pump-down cycle:
Once the system has reached its set point and is about to shut off, the LLSV on the liquid line closes. The compressor then pumps the majority of the refrigerant charge into the high pressure side before the system stops on the low pressure pump-down switch. This step reduces the amount of charge on the low side in order to prevent off-cycle migration.

A pump-down cycle represents one of the most effective ways to protect against the off-cycle migration of refrigerant; however it is only convenient to apply on application with thermostatic control.

Rack application with pressostatic control can use timer delay to empty the evaporators before the stop. Time should be carefully set to not interfere with the low safety pressure switch.

For low pressure pump-down switch settings, refer to section "High and low pressure protection". For suggested wiring diagrams, please see to section "Electrical connections".

Models MLZ015-048 incorporate an internal low leak check valve that is appropriate for pumpdown operations. This valve prevents the back flow of refrigerant from the high pressure to the low pressure side through the compressor so pump down conditions can be achieved and maintained.

Models MLZ058-076 are not equipped with this low leak check valve. Under certain conditions, the internal valve may not completely seal, and due to the refrigerant back flow the compressor might restart during pump-down applications. Repeated short cycling can result in a compressor breakdown. It is recommended to install an external magnetic check valve (such as Danfoss Part No. 120Z5046) close to the compressor's discharge connector so the discharge volume is minimized.

A magnetic check valve is recommended for this as it offers the best solution regarding minimal required and maximal pressure drop over the wide application envelope of the MLZ compressors. If a Danfoss NRV check valve is applied it has to be carefully selected for the specific operation conditions of the individual system.

Tests for pump down cycle approval:
- As the pump-down switch setting is inside the application envelope, tests should be carried out to check unexpected cut-out during transient conditions (ie. defrost – cold starting). When unwanted cut-outs occur, the low pressure pump-down switch can be delayed. In this case a low pressure safety switch without any delay timer is mandatory.
- While the thermostat is off, the number of pressure switch resets should be limited to avoid short cycling of the compressor. Use dedicated wiring and an additional relay which allows for one shot pump-down.

The pump-down allows to store all the refrigerant in the high pressure side circuit. On unitary or close-coupled systems, where the system refrigerant charge is expected to be both correct and definable the entire system charge may be stored in the condenser during pump-down if all components have been properly sized.

Other application needs a liquid receiver to store the refrigerant.

Receiver dimensioning requires special attention. The receiver shall be large enough to contain part of the system refrigerant charge but it shall not be dimensioned too large. A large receiver easily leads to refrigerant overcharging during maintenance operation.

Refrigerant charge limit

MLZ scroll compressors can tolerate liquid refrigerant up to a certain extend without major problems. However, excessive liquid refrigerant in the compressor is always unfavourable for service life. Besides, the installation cooling capacity may be reduced because of the evaporation taking place in the compressor and/or the suction line instead of the evaporator. System design must be such that the amount of liquid refrigerant in the compressor is limited. In this respect, follow the guidelines given in the section: "essential piping design recommendations" in priority.

Use the tables below to quickly evaluate the required compressor protection in relation with the system charge and the application. More detailed information can be found in the paragraphs hereafter. Please contact Danfoss for any deviation from these guidelines.

Model	Refrigerant charge limit
MLZ015-026	3.6 kg (8 lb)
MLZ030-048	5.4 kg (12 lb)
MLZ058-076	7.2 kg (16 lb)

Depending on test results, crankcase heaters, Liquid Line Solenoid Valve, pump down or suction accumulator must be applied see below.

	BELOW charge limit		ABOVE charge limit	
Packaged units	✓	No test or additional safeties required	REQ	Off cycle migration test
			REQ	Liquid flood back test
System with remote heat exchanger	REC	Off cycle migration test	REQ	Off cycle migration test
			REQ	Liquid flood back test

REC	Recommended	✓	No test or additional safeties required
REQ	Required		

Note: for special conditions such as low ambient temperature, low load operation or brazed plate heat exchangers please refer to corresponding sections

Liquid flood back

During normal operation, refrigerant enters the compressor as a superheated vapour. Liquid flood back occurs when a part of the refrigerant entering the compressor is still in liquid state.

A continuous liquid flood back will cause oil dilution and, in extreme situations lead to lack of lubrication and high rate of oil leaving the compressor.

Liquid flood back test

Repetitive liquid flood back testing must be carried out under TXV threshold operating conditions: a high pressure ratio and minimum evaporator load, along with the measurement of suction superheat, oil sump temperature and discharge gas temperature.

During operations, liquid flood back may be detected by measuring either the oil sump temperature or the discharge gas temperature. If at any time during operations, the oil sump temperature drops to within 10 K (18 °F) or less above the saturated suction temperature, or should the discharge gas temperature be less than 35 K (65 °F) above the saturated discharge temperature, this indicates liquid flood back.

Continuous liquid flood back can occur with a wrong dimensioning, a wrong setting or malfunction of the expansion device or in case of evaporator fan failure or blocked air filters.

A suction accumulator providing additional protection as explained hereunder can be used to solve light continuous liquid flood back.

Suction accumulator

A suction accumulator offers protection against refrigerant flood back at start-up, during operations or defrosting by trapping the liquid refrigerant upstream from the compressor. The suction accumulator also protects against off-cycle migration by providing additional internal free volume to the low side of the system.

A suction accumulator must be carefully dimensioned, taking into account the refrigerant charge as well as the gas velocity in the suction line. Depending on the operating conditions it may happen that the recommended connections of the accumulator are one size smaller than the suction lin

Power supply and electrical protection
Specific application recommendations

Low ambient application

Low ambient start-up

Under cold ambient conditions (<0 °C (32 °F)), upon start-up the pressure in the condenser may be so low that a sufficient pressure differential across the expansion device cannot be developed to properly feed the evaporator.

As a result, the compressor may go into a deep vacuum, which can lead to compressor failure due to internal arcing and instability in the scroll wraps. Under no circumstances should the compressor be allowed to operate under vacuum. The low-pressure control must be set in accordance with the table from section "High and low pressure control" in order to prevent this from happening.

Early feeding of the evaporator and management of the discharge pressure could help to attenuate these effects.

Low pressure differentials can also cause the expansion device to "hunt" erratically, which might cause surging conditions within the evaporator, with liquid spillover into the compressor. This effect is most pronounced during low load conditions, which frequently occur during low ambient conditions.

Low ambient operations

It is recommended that the unit be tested and monitored at minimum load and low ambient conditions as well. The following considerations should be taken into account to ensure proper system operating characteristics.

The expansion device should be sized to ensure proper control of the refrigerant flow into the evaporator. An oversized valve may result in erratic control. This consideration is especially important in manifolded units where low load conditions may require the frequent cycling of compressors. This can lead to liquid refrigerant entering the compressor if the expansion valve does not provide stable refrigerant super-heat control under varying loads.

The superheat setting of the expansion device should be sufficient to ensure proper superheat levels during low loading periods. A minimum of 5 K (9 °F) stable superheat is required.

Head pressure control under low ambient conditions: Several possible solutions are available to prevent the risk of compressor to vacuum and low pressure differential between the suction and discharge pressures.

In air-cooled machines, cycling the fans with a head pressure controller will ensure that the fans remain off until the condensing pressure has reached a satisfactory level. Variable speed fans can also be used to control the condensing pressure. In water-cooled units, the same can be performed using a water regulator valve that is also operated by head pressure, thereby ensuring that the water valve does not open until the condensing pressure reaches a satisfactory level.

The minimum condensing pressure must be set at the minimum saturated condensing temperature shown in the application envelopes.

Under very low ambient conditions, in which testing has revealed that the above procedures might not ensure satisfactory condensing and suction pressures, the use of a head pressure control valve is recommended. Note: This solution requires extra refrigerant charge, which can introduce other problems. A non-return valve in the discharge line is recommended and special care should be taken when designing the discharge line.

For further information, please contact Danfoss.

Scroll and reciprocating

Unlike the reciprocating compressor, a scroll doesn't have dead volume. Neither does it have a suction valve causing pressure drop. As a result a scroll compressor has a high volumetric efficiency even at low suction pressure. In systems such as ice makers and milk cooling tanks this high capacity at low temperature shortens the cooling time.

When moving from a reciprocating compressor to a scroll compressor, the selection shall always be made based on cooling capacity at the application rating point. Never make a selection based on equivalent displacement.

Low load operations

The compressor should be run for a minimum period to ensure that the oil has sufficient time to properly return to the compressor sump and that the motor receives enough cooling under conditions of lowest refrigerant mass flow.

Brazed plate heat exchangers

A brazed plate heat exchanger needs very little internal volume to satisfy the heat transfer requirements. Consequently, the heat exchanger offers very little internal volume for the compressor to draw vapour from the suction side. The compressor can then quickly enter into a vacuum condition. It is therefore important that the expansion device be sized correctly and that a sufficient pressure differential across the expansion device be available to ensure adequate refrigerant feed into the evaporator. This aspect is of special concern when operating the unit under low ambient and load conditions. For further information on these conditions, please refer to the previous sections.

Due to the small volume of the brazed plate heat exchanger, no pump-down cycle is normally required. The suction line running from the heat exchanger to the compressor must be trapped to avoid refrigerant migration to the compressor.

When using a brazed plate condenser heat exchanger, a sufficient free volume for the discharge gas to accumulate is required in order to avoid excess pressure build-up. At least 1 meter of discharge line is necessary to generate this volume. To help reduce the discharge gas volume immediately after start-up, the supply of cooling water to the heat exchanger may be opened before the compressor starts, to remove superheat and condense the incoming discharge gas more quickly.

Water utilising systems

Apart from residual moisture in the system after commissioning, water could also enter the refrigeration circuit during operation. Water in the system shall always be avoided. Not only because it can shortly lead to electrical failure, sludge in sump and corrosion but in particular because it can cause serious safety risks.

Common causes for water leaks are corrosion and freezing.

Corrosion: Materials in the system shall be compliant with water and protected against corrosion.

Freezing: When water freezes into ice its volume expands which can damage heat exchanger walls and cause leaks. During off periods water inside heat exchangers could start freezing when ambient temperature is lower than 0 °C (32 °F). During on periods ice banking could occur when the circuit is running continuously at too low load. Both situations should be avoided by connecting a pressure and thermostat switch in the safety line.

Assembly line procedure

Installation

Each MLZ compressor is shipped with printed Instructions for installation. These Instructions can also be downloaded from our web site www.danfoss.com or directly from: http://instructions.cc.danfoss.com

System cleanliness

The refrigeration system, regardless of the type of compressor used, will only provide high efficiency and good reliability, along with a long operating life, if the system contains solely the refrigerant and oil it was designed for. Any other substances within the system will not improve performance and, in most cases, will be highly detrimental to system operations.

The presence of non-condensable substances and system contaminants, such as metal shavings, solder and flux, have a negative impact on compressor service life. Many of these contaminants are small enough to pass through a mesh screen and can cause considerable damage within a bearing assembly. The use of highly hygroscopic POE oil in MLZ compressors requires that the oil be exposed to the atmosphere just as little as possible.

During the manufacturing process, circuit contamination may be caused by:

- Brazing and welding oxides,
- Filings and particles from the removal of burrs in pipe-work,
- Brazing flux,
- Moisture and air.

Compressor handling and storage

Compressors are provided with a lifting lug. This lug should always be used to lift the compressor. Once the compressor is installed, the lifting lug should never be used to lift the complete installation. The compressor must be handled with caution in the vertical position, with a maximum inclination of 15° from vertical. Store the compressor between -35 °C (-31 °F) and 55 °C (131 °F), not exposed to rain or corrosive atmosphere.

Compressor mounting

Maximum inclination from the vertical plane, while operating must not exceed 7 degrees. All compressors are delivered with 4 rubber grommets and metal sleeves. Compressors must always be mounted with these grommets. Recommended torque for mounting bolts: 11 Nm (±1 Nm) / 100 lbf-in (± 10 lbf-in).

Compressor holding charge

Each compressor is shipped with a nominal dry nitrogen holding charge between 0.4 bar /6 psi and 0.7 bar / 10 psi, and is sealed with elastomer plugs. The plugs should be removed with care to avoid oil loss when the holding charge is released. Remove the suction plug first and the discharge plug afterwards. The plugs shall be removed only just before connecting the compressor to the installation in order to avoid moisture entering the compressor. When the plugs are removed, it is essential to keep the compressor in an upright position to avoid oil spillage.

Tube brazing procedure

Do not bend the compressor discharge or suction lines or force system piping into the compressor connections, because this will increase stresses that are a potential cause of failure. Recommended brazing procedures and material, are described on following page.

Brazing material

For copper suction and discharge fittings, use copper-phosphorus brazing material. Sil-Fos® and other silver brazing materials are also acceptable. If flux is required for the brazing operation, use coated rod or flux core wire. To avoid system contamination, do not brush flux on.

Compressor connection

When brazing the compressor fittings, do not overheat the compressor shell, which could severely damage certain internal components due to excessive heating. Use of a heat shield and/or a heat-absorbent compound is highly recommended. For brazing the suction and discharge connections, the following procedure is advised:

- Make sure that no electrical wiring is connected to the compressor
- Protect the terminal box and compressor painted surfaces from torch heat damage (see diagram).
- Use only clean refrigeration-grade copper tubing and clean all connections.
- Purge nitrogen through the compressor in order to prevent against oxidation and flammable conditions. The compressor should not be exposed to the open air for extended periods.
- Use of a double-tipped torch is recommended.
- Apply heat evenly to area (A) until the brazing temperature is reached. Move the torch to area (B) and apply heat evenly until the brazing temperature has been reached there as well, and then begin adding the brazing material. Move the torch evenly around the joint, in applying only enough brazing material to flow the full circumference of the joint.
- Move the torch to area (C) only long enough to draw the brazing material into the joint, but not into the compressor
- Remove all remaining flux once the joint has been soldered with a wire brush or a wet cloth. Remaining flux would cause corrosion of the tubing.

Ensure that no flux is allowed to enter into the tubing or compressor. Flux is acidic and can cause substantial damage to the internal parts of the system and compressor.

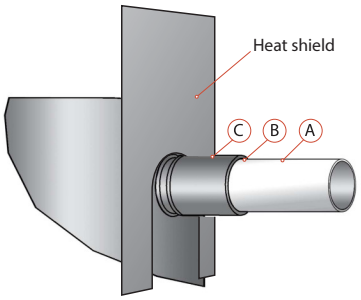

The POE oil used in MLZ compressors is highly hygroscopic and will rapidly absorb moisture from the air. The compressor must therefore not be left open to the atmosphere for a long period of time. The compressor fitting plugs shall be removed just before brazing the compressor.

Before eventual unbrazing the compressor or any system component, the refrigerant charge must be removed from both the high and low pressure sides. Failure to do so may result in serious personal injury. Pressure gauges must be used to ensure all pressures are at atmospheric level.

For more detailed information on the appropriate materials required for brazing or soldering, please contact the product manufacturer or distributor. For specific applications not covered herein, please contact Danfoss for further information.

		 **Brazed connection ODF tube**
MLZ015-026	Suction	3/4"
	Discharge	1/2"
MLZ030-045	Suction	7/8"
	Discharge	1/2"
MLZ048	Suction	7/8"
	Discharge	3/4"
MLZ058-076	Suction	1"1/8
	Discharge	7/8"

Vacuum evacuation and moisture removal

Moisture obstructs the proper functioning of the compressor and the refrigeration system.

Air and moisture reduce service life and increase condensing pressure, and cause excessively high discharge temperatures, which can destroy the lubricating properties of the oil. Air and moisture also increase the risk of acid formation, giving rise to copper platting. All these phenomena can cause mechanical and electrical compressor failure.

For these reasons it's important to perform a vacuum dehydration on the system to remove all residual moisture from the pipe-work after assembly; MLZ compressors are delivered with < 100ppm moisture level. The required moisture level in the circuit after vacuum dehydration must be < 100ppm for systems with an MLZ.

- Never use the compressor to evacuate the system.
- Connect a vacuum pump to both the LP & HP sides.
- Evacuate the system to a pressure of 500 µm Hg / 0.02 in Hg (0.67 mbar) absolute.
- Do not use a megohm meter nor apply power to the compressor while it's under vacuum as this may cause internal damage.

Liquid line filter driers

A properly sized & type of drier is required. Important selection criteria include the driers water content capacity, the system refrigeration capacity, and the system refrigerant charge. The drier must be able to reach and maintain a moisture level of 50ppm end point dryness (EPD). Danfoss recommends DML (100% molecular sieve) driers for MLZ compressors (R404A, R507, R134a, R22, R407A, R407F, R448A, R449A, R452A, R513A) with POE oil.

After burn out, remove & replace the liquid line filter drier and install a Danfoss type DAS burnout drier of the appropriate capacity. Refer to the DAS drier instructions and technical information for correct use of the burnout drier on the liquid line.

Refrigerant charging

It is recommended that system charging be done using the weighed charge method, adding refrigerant to the high side of the system. Charging the high and low sides of a system with gas simultaneously at a controlled rate is also an acceptable method. Do not exceed the recommended unit charge, and never charge liquid to the low side.

Vacuum or charge from one side can seal the scrolls and result in a non-starting compressor. When servicing, always ensure that LP/HP pressures are balanced before starting the compressor.

Be sure to follow all government regulations regarding refrigerant reclamation and storage.

Insulation resistance and dielectric strength

Insulation resistance must be higher than 1 megohm when measured with a 500 volt direct current megohm tester.

Each compressor motor is tested at the factory with a high potential voltage (hi-pot) that exceeds the UL requirement both in potential and in duration.

Leakage current is less than 0.5 mA.

MLZ scroll compressors are configured with the pump assembly at the top of the shell, and the motor below. As a result, the motor can be partially immersed in refrigerant and oil. The presence of refrigerant around the motor windings will result in lower resistance values to ground and higher leakage current readings. Such readings do not indicate a faulty compressor, and should not be cause for concern.

In testing insulation resistance, Danfoss recommends that the system be first operated briefly to distribute refrigerant throughout the system. Following this brief operation, retest the compressor for insulation resistance or current leakage.

Never reset a breaker or replace a fuse without first checking for a ground fault (a short circuit to ground). Be alert for sounds of arcing inside the compressor.

Packaging

Compressor packaging

Single pack

Compressors are packed individually in a cardboard box. They can be ordered in any quantity. Minimum ordering quantity = 1. As far as possible, Danfoss will ship the boxes on full pallets of 8 or 9 compressors.

- Each box also contains following accessories:
- 4 grommets
- 4 assemblies of self tapping US thread bolts, washers and sleeves
- 4 additional sleeves
- 1 screw for earth connection

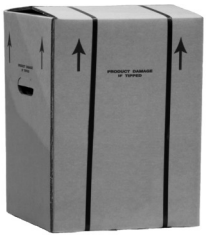

Industrial pack

Compressors are not packed individually but are shipped all together on one pallet. They can be ordered in quantities of full pallets only, multiples of 12 compressors.

Each industrial pack pallet contains following accessories:

- 4 grommets per compressor
- 4 sleeves per compressor



Packaging details

	MLZ-A	Danfoss pallets Optimized for overseas container loading & European storage racks	
Shipped accessories	Code number	121L….	
	Pack type	Industrial pack	Single pack
	Compressors per pallet	12	9*
	Static stacking of pallets **	3	3
	Run capacitor (for single phase models)	Not included	Not included
	Screw for earth connection	Included	Included
	4 grommets per compressor	Included	Included
	4 assemblies of self tapping US thread bolt + washer + sleeve per compressor	Not included	Included
	4 sleeves per compressor	Included	Included

* Quantity for full pallets. Single packs can be ordered per 1.

** Stacking only allowed for full pallets with identical products per pallet

Ordering

Compressor code numbers

Single pack - Brazed version

	Compressors	Model variation	Connections	Features	Evolution	Voltage code 1	Voltage code 2
Danfoss palette	MLZ015	T	P	9	C	121L8985	121L9009
	MLZ019	T	P	9	C	121L8989	121L9013
	MLZ021	T	P	9	C	121L8993	121L9017
	MLZ026	T	P	9	C	121L8997	121L9021
	MLZ030	T	C	9	C	121L9001	121L9025
	MLZ038	T	C	9	C	121L9005	121L9029
	MLZ045	T	C	9	C	–	121L9033
	MLZ048	T	C	9	C	–	121L9037
	MLZ058	T	C	9	C	–	121L9041
	MLZ066	T	C	9	C	–	121L9045
	MLZ076	T	C	9	C	–	121L9049

Industrial pack - Brazed version

	Compressors	Model variation	Connections	Features	Evolution	Voltage code 1	Voltage code 2
Danfoss palette	MLZ015	T	P	9	C	121L8986	121L9010
	MLZ019	T	P	9	C	121L8990	121L9014
	MLZ021	T	P	9	C	121L8994	121L9018
	MLZ026	T	P	9	C	121L8998	121L9022
	MLZ030	T	C	9	C	121L9002	121L9026
	MLZ038	T	C	9	C	121L9006	121L9030
	MLZ045	T	C	9	C	–	121L9034
	MLZ048	T	C	9	C	–	121L9038
	MLZ058	T	C	9	C	–	121L9042
	MLZ066	T	C	9	C	–	121L9046
	MLZ076	T	C	9	C	–	121L9050

Single pack - Rotolock version

	Compressors	Model variation	Connections	Features	Evolution	Voltage code 1	Voltage code 2
Danfoss palette	MLZ015	T	T	9	C	121L8987	121L9011
	MLZ019	T	T	9	C	121L8991	121L9015
	MLZ021	T	T	9	C	121L8995	121L9019
	MLZ026	T	T	9	C	121L8999	121L9023
	MLZ030	T	Q	9	C	121L9003	121L9027
	MLZ038	T	Q	9	C	121L9007	121L9031
	MLZ045	T	Q	9	C	–	121L9035
	MLZ048	T	Q	9	C	–	121L9039
	MLZ058	T	Q	9	C	–	121L9043
	MLZ066	T	Q	9	C	–	121L9047
	MLZ076	T	Q	9	C	–	121L9051

Industrial pack - Rotolock version

	Compressors	Model variation	Connections	Features	Evolution	Voltage code 1	Voltage code 2
Danfoss palette	MLZ015	T	T	9	C	121L8988	121L9012
	MLZ019	T	T	9	C	121L8992	121L9016
	MLZ021	T	T	9	C	121L8996	121L9020
	MLZ026	T	T	9	C	121L9000	121L9024
	MLZ030	T	Q	9	C	121L9004	121L9028
	MLZ038	T	Q	9	C	121L9008	121L9032
	MLZ045	T	Q	9	C	–	121L9036
	MLZ048	T	Q	9	C	–	121L9040
	MLZ058	T	Q	9	C	–	121L9044
	MLZ066	T	Q	9	C	–	121L9048
	MLZ076	T	Q	9	C	–	121L9052

Accessories and spare parts

Run capacitors for PSC wiring



Type	Code no.	Description	Application	Packaging	Pack size
80 µF	120Z0052	PSC wiring Run Capacitor 80 µF,	60 Hz, Motor Code 1: MLZ/MLM042	Multipack	10
70 µF	120Z0051	PSC wiring Run Capacitor 70 µF,	50 Hz, Motor Code 5: MLZ/MLM019-021-26 60 Hz, Motor Code 1: MLZ/MLM030	Multipack	10
60 µF	120Z0050	PSC wiring Run Capacitor 60 µF,	60 Hz, Motor Code 1: MLZ/MLM026	Multipack	10
55 µF	8173234	PSC wiring Run Capacitor 55 µF,	60 HZ, Motor Code 1: MLZ/MLM038	Multipack	10
45 µF	8173232	PSC wiring Run Capacitor 45 µF,	60 Hz, Motor Code 1: MLZ/MLM015-019-021	Multipack	10

Start capacitors for CSR wiring



Type	Code no.	Description	Application	Packaging	Pack size
145 – 175 µF	120Z0399	CSR wiring Start Capacitor 145 – 175 µF	60 Hz, Motor Code 1: MLZ/MLM015-019-021	Multipack	10
161 – 193 µF	120Z0400	CSR wiring Start Capacitor 161 – 193 µF	60 Hz, Motor Code 1: MLZ/MLM030	Multipack	10
88 – 108 µF	8173001	CSR wiring Start Capacitor 88 – 108 µF	60 Hz, Motor Code 1: MLZ/MLM026, MLZ/MLM038	Multipack	10

Starting relays for CSR wiring



Type	Code no.	Description	Application	Packaging	Pack size
RVA2ACKL	120Z0396	CSR wiring Starting Relay, motor voltage code 1 -208 – 230 V / 1 / 60 Hz	MLZ/MLM015-019-021	Multipack	10
RVA2ABKL	120Z0397	CSR wiring Starting Relay, motor voltage code 1 -208 – 230 V / 1 / 60 Hz	MLZ/MLM026-030, MLZ/MLM042	Multipack	10
RVAA4IKL	120Z0398	CSR wiring Starting Relay, motor voltage code 1 -208 – 230 V / 1 / 60 Hz	MLZ/MLM038	Multipack	10

IP54 upgrade kit

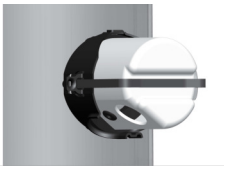

Code no.	Description	Application	Packaging	Pack size
118U0056	IP54 upgrade kit for round terminal box	MLZ015-019-021-026	Multipack	6
118U0057	IP54 upgrade kit for square terminal box	MLZ030-038-042-045-048-058-076	Multipack	6

Acoustic hoods



Code no.	Description	Application	Packaging	Pack Size
120Z5083	Acoustic hood	MLZ015-019-021-026	Single pack	1
120Z5084	Acoustic hood	MLZ030-038-042-045-048	Single pack	1
120Z5085	Acoustic hood	MLZ058-066-076	Single pack	1

Crankcase heaters



Code no.	Description	Application	Packaging	Pack Size
120Z5040	Belt type crankcase heater, 65 W, 230 V, CE mark, UL (Wire length: 1270 mm)	MLZ/MLM 015-019-021-026	Multipack	4
120Z0055	Belt type crankcase heater,40 W, 230 V, CE mark, UL (wire length:1000 mm)	MLZ/MLM015-019--021-26	Multipack	6
120Z0059	Belt type crankcase heater, 65 W, 230 V, CE mark, UL (Wire length: 1000 mm)	MLZ/MLM 030-038-042-045-048-058-066-076	Multipack	6

Discharge thermostats and sensors



Code no.	Description	Application	Packaging	Pack size
7750009	Discharge thermostat kit	All models	Multipack	10
7973008	Discharge thermostat kit	All models	Industry pack	50

Lubricant



Code no.	Description	Application	Packaging	Pack size
120Z0648	POE lubricant, 215PZ(RL46HB),1 litre can	MLZ	Multipack	12

Mounting kits

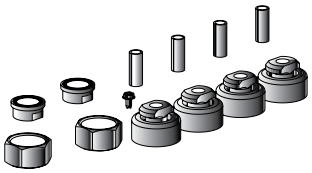

Code no.	Description	Application	Packaging	Pack size
120Z0661	Mounting kit for 1 scroll compressor including 4 grommets, 4 sleeves, 4 bolts, 4 washers	MLZ	Single pack	1

Rotolock adapter

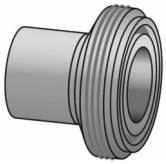

Code no.	Description	Application	Packaging	Pack size
120Z0366	Rotolock adaptor (1-1/4" ~ 3/4")	MLZ015-019-021-026 suction	Multipack	10
120Z0367	Rotolock adaptor (1-1/4" ~ 7/8")	MLZ030-038-042-045-048 suction	Multipack	10
120Z0364	Rotolock adaptor (1-3/4" ~ 1-1/8")	MLZ058-066-076 suction	Multipack	10
120Z0365	Rotolock adaptor (1" ~ 1/2")	MLZ015-019-021-026-030-038-042-045 discharge	Multipack	10
120Z0366	Rotolock adaptor (1-1/4" ~ 3/4")	MLZ048 discharge	Multipack	10
120Z0367	Rotolock adaptor (1-1/4" ~ 7/8")	MLZ058-066-076 discharge	Multipack	10

Rotolock nuts

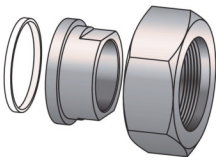

Code no.	Description	Application	Packaging	Pack size
120Z5074	Rotolock nuts 1"1/4 and 1" with sleeves and gaskets	MLZ015-045	Multipack	6
120Z5076	2 Rotolock nuts 1"1/4 with sleeves and gaskets	MLZ048	Multipack	6
120Z5075	Rotolock nuts 1"1/4 and 1"3/4 with sleeves and gaskets	MLZ058-066-076	Multipack	6

Rotolock service valves and valve sets (without gasket)



Code no.	Description	Application	Packaging	Pack size
7968004	Rotolock valve, V06, (1" Rotolock, 1/2" ODF)	Discharge MLZ015-026-045	Industry pack	50
8168031	Rotolock valve, V06, (1" Rotolock, 1/2" ODF)		Multipack	6
7968006	Rotolock valve, V04, (1"1/4 Rotolock, 3/4" ODF)	Suction MLZ015-026 Discharge MLZ048	Industry pack	42
8168029	Rotolock valve, V04, (1"1/4 Rotolock, 3/4" ODF)		Multipack	6
7968007	Rotolock valve, V05, (1"1/4 Rotolock, 7/8" ODF)	Suction MLZ030-048 Discharge MLZ058-066-076	Industry pack	36
8168030	Rotolock valve, V05, (1"1/4 Rotolock, 7/8" ODF)		Multipack	6
7968009	Rotolock valve, V02, (1"3/4 Rotolock, 1"1/8 ODF)	Suction MLZ058-066-076	Industry pack	24
8168028	Rotolock valve, V02, (1"3/4 Rotolock, 1"1/8 ODF)		Multipack	6
7703008	Valve set V02 (1"3/4rotolock, 1"1/8 ODF), V05 (Rotolock 1"1/4, 7/8" ODF)	MLZ058-066-076	Multipack	6

Solder sleeve adapter sets

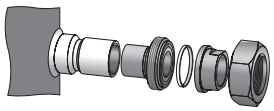

Code no.	Description	Application	Packaging	Pack size
120Z0126	Rotolock adaptor set (1-1/4" ~ 3/4"), (1" ~ 1/2")	MLZ015-019-021-026	Multipack	6
120Z0127	Rotolock adaptor set (1-1/4" ~ 7/8"), (1" ~ 1/2")	MLZ030-038-042-045	Multipack	6
120Z0128	Rotolock adaptor set (1-1/4" ~ 7/8"), (1-1/4" ~ 3/4")	MLZ048	Multipack	6
120Z0129	Rotolock adaptor set (1-3/4" ~ 1-1/8"), (1-1/4" ~ 7/8")	MLZ058-066-076	Multipack	6

Terminal boxes, covers & T-block connectors



Code no.	Description	Application	Packaging	Pack Size
120Z5015	Round terminal box (P & T version)	MLZ015-019-021-026	Multipack	10
120Z5018	Square terminal box (C & Q version)	MLZ030-038-042-045-058-066-076	Multipack	10

Online support

Danfoss offers a wide range of support along with our products, including digital information, software, mobile apps and expert guidance. See the possibilities below.

The Danfoss Design center

Discover the Design Center, our advanced digital platform that streamlines product selection. With integrated tools and enhanced type pages, it's simpler than ever to access product information and documentation, and to select the right products. Check the availability of Danfoss products at partner locations and enjoy seamless transitions from selection to purchase with our basket-to-basket functionality. Whether you're buying from our distributors or directly from the Product Store, the Design Center simplifies your experience. Learn more at: designcenter.danfoss.com.

The Danfoss product store

The Danfoss Product Store is a one-stop shop available 24/7 for our customers, no matter where you are in the world or what area of industry you work in. Browse our catalog, check product details and documentation, view your prices and product availability, and quickly finalize your purchase. Start browsing at: store.danfoss.com.

Danfoss Partner Portal/Product Data tool

Designed to support you with easy access to product data extracts, essential resources, tools, and information. The Partner Portal provides a centralized hub for product documentation, training materials, marketing assets, and technical support, ensuring you have everything you need to succeed and grow your business with Danfoss. The Partner Portal is available 24/7 at: partner.danfoss.com and is ready to support your business.

Find technical documentation

Find technical documentation you need to get your project up running. Get direct access to our official collection of data sheets, certificates and declarations, manuals and guides, 3D models and drawings, case stories, brochures, and much more. Start searching now at: documentation.danfoss.com.

Danfoss Learning

Danfoss Learning is a free online learning platform. It features courses and materials specifically designed to help engineers, installers, service technicians, and wholesalers better understand the products, applications industry topics, and trends that will help you do your job better. Find your local Danfoss website here: learning.danfoss.com.

Get local information and support

Local Danfoss websites are the main sources for help and information about our company and products. Find product availability, get the latest reginal news, or connect with a nearby expert - all in your own language. Find your local Danfoss website here: danfoss.com.

Danfoss A/S

Climate Solutions . danfoss.com . +45 7488 2222

Any information, including, but not limited to information on selection of product, its application or use, product design, weight, dimensions, capacity or any other technical data in product manuals, catalogues description, advertisements, etc. and whether made available in writing, orally, electronically, online or via download, shall be considered informative, and is only binding if and to the extent, explicit reference is made in a quotation or order confirmation. Danfoss cannot accept any responsibility for possible errors in catalogues, brochures, videos and other material.

Danfoss reserves the right to alter its products without notice. This also applies to products ordered but not delivered provided that such alterations can be made without changes to form, fit or function of the products.

All trademarks in this material are property of Danfoss A/S or Danfoss group companies. Danfoss and the Danfoss logo are trademarks of Danfoss A/S. All rights reserved.