Parts Manual
danfoss.com

H1B 250cc
Bent Axis Motor

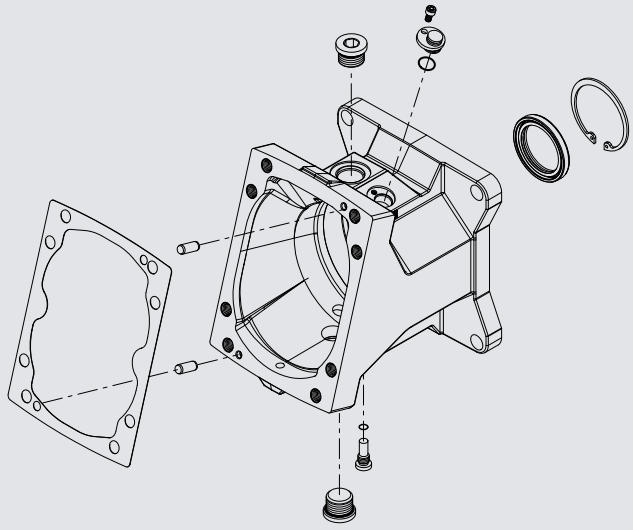

Revision history

Table of revisions

Date	Changed	Rev
October 2026	Updated servo pressure supply part numbers	0802
July 2026	Added end cap option TC	0801
July 2026	Removed obsolete control option	0703
July 2026	Servo solenoid updates, speed sensor updates, servo pressure supply updates	0702
September 2025	Removed obsolete parts configuration and updated part numbers, removed sort string B0320	0701
August 2025	Various part number updates, added AN and AP special hardware options	0614
November 2024	Update J0010 and L0100 part numbers	0613
November 2022	Update F0090 Part Number	0612
December 2021	Corrected loop flushing and endcap part numbers	0611
February 2021	Corrected special hardware NN valve segment assembly part number	0610
January 2021	Updated loop flushing part numbers	0609
June 2020	Changed document number from 'AX00000138' to 'AX152986482121' and changed servo pressure O-ring part numbers	0608
January 2020	Added new flange options and updated HE/HF servo pressure supply part numbers	0506
August 2019	Updated part numbers and added a caution for servo piston removal	0505
February 2019	Updated servo pressure supply illustrations	0504
November 2018	Updated servo pressure supply option HE	0503
October 2018	Added shaft option LN and corrected End cap A piston assembly number	0502
May 2018	Added SB-2018-028	0501
February 2018	Updated to Engineering Tomorrow design	0402

General information

Service parts identification.... 5
Nameplate.... 5
Date code.... 6
About service bulletins.... 6
Procedure to identify a part.... 6
Regional part numbers.... 6
Example of a part identification (H1B 250).... 6
Adobe Acrobat 2-page viewing.... 7
Order code.... 8
Notes.... 9

Control

Control D1-DH.... 10
Control E1-F2.... 12
Control K1-KH.... 16
Control L1-LH.... 18
Control M1-MH.... 20
Control P1-T2.... 22
Control TA-TH.... 30

Servo pressure supply

Servo pressure AA, AD.... 32
Servo pressure BA, BB.... 34
Servo pressure CA.... 36
Servo pressure D1, D2.... 38
Servo pressure DA, EA.... 40
Servo pressure G1, G2.... 42
Servo pressure HA-HD.... 44
Servo pressure HE, HF.... 46
Servo pressure K1, K2.... 48
Servo pressure KA, KH.... 50
Servo pressure M1, M2.... 52
Servo pressure MA.... 54
Servo pressure MH.... 56
Servo pressure NP, NR, NT.... 58
Servo pressure V1.... 60
Servo pressure WA.... 62

Orifice

Orifice A, B, C, D.... 64

End cap

End cap PA.... 66
End cap PB.... 68
End cap PF.... 70
End cap RA.... 72
End cap RB.... 74
End cap RE.... 76
End cap TA.... 78
End cap TB.... 80
End cap TC.... 82

Flange/housing

H1B 250cc flange/housing DN, DS.... 84
Flange/housing VN.... 86
Flange/housing VS.... 88

Shaft

Shaft DN-PS.... 90

Speed sensor

Speed sensor.... 92

Loop flushing

Loop flushing A-N.... 94
Loop flushing 05-50.... 96

© Danfoss A/S, 2026

Loop flushing NN 98

Special hardware and displacement

Special hardware AN, AP 100
H1B 250cc special hardware HN, HP 102
Special hardware NN, NP 104
H1B 250cc minimum displacement 106
Maximum displacement 108

Overhaul seal kit

H1B 250cc seal kit 112

Service bulletin

SB-2018-028 113
SB-2019-017 114
SB-2020-038 115
SB-2022-004 117
SB-2025-006 118

General information

Service parts identification

The following information and procedure is used to identify the module group, item number, manufacture date, part number, and part name of the parts included in the product.

The parts listed include all parts which may be used when performing either “Minor Repairs”, “Major Repairs” or “Conversions” on the product.

Nameplate

Each unit will have a nameplate affixed to the housing. The nameplate of the will include the following information:

Model code

The Danfoss model code completely defines the specific unit and must be used when ordering parts to service this product.

Model/material number

The Danfoss model number (also known as material number) is used by the factory in manufacturing. On repeat orders, a complete unit can be ordered by the model number.

Serial number

The Danfoss serial number is used to identify the manufacture date and the unit sequence in the build. The serial number is also used to identify the units warranty time period.

The letter code indicates the location of original manufacture (assembly).

The first number (2 digits) indicates the year of manufacture. The second number (2 digits) indicates the calendar week of manufacture.

The third number (5 digits) is a sequential number used to identify a specific unit.

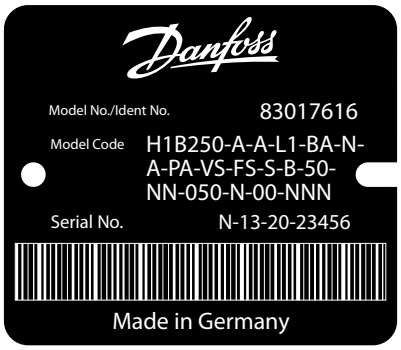

Date code

The date code is defined as the year and week of manufacture. The same item number may list more than one part number. This indicates that there is more than one configuration for that item number. You will see that there are different date codes for the different part numbers. Find the date code of your unit from the nameplate to determine which service part number you need to order.

Example: The service part desired is item G30

Order Code	Item	Date Begin	Date End	Part Number	Part Name	Qty. per Model/Kit
80	G30	89-17		8000243	End cap gasket	1
	G30		89-16	8000151	End cap gasket (SB-1995-006)	1

All units using this order code with a date code prior to 89-17 must use part number “8000151.” All units with a date code of 89-17 and newer must use part number “8000243.”

About service bulletins

A Service Bulletin Number (SB-_ _ _ _ - _ _ _) may follow the “Part Name” of the part you desire. You must read that Service Bulletin prior to ordering that part. The information contained in these Service Bulletins, as of the print date of this bulletin, are included at the end of this manual. Service Bulletins contain more detailed information such as interchangeability, what additional parts are involved, etc. It is suggested that you add additional Service Bulletins to this manual as you receive them.

Procedure to identify a part

The modular design of this product results in a simplified service parts list and part number identification procedure.

The same item numbers are used for same part names on all units within a product type. A part number that has another number following it in parentheses is done to make this a world wide manual. Referring to the Port Configuration in the Order Code on page 8, valid variables are "A" (Inch) and "M" (metric).

Regional part numbers

Some part numbers are region specific and should be ordered accordingly.

As an example, the part number (example: 314583 (9008000-0118) will be used. The first number is sold in Europe. The number in parentheses is sold in the United States. Customers would order 9008000-0118 if ordering the part in the United States.

Example of a part identification (H1B 250)

The nameplate on an H1 motor has an Order Code of H1B250 A L1 BA N A PA VS FS S B 50 NN 050 N 00 NNN. Use the following procedures to determine the part number of the minimum angle set screw used on this motor

1. Referring to the minimum displacement module in the *Order code* on page 8, the minimum angle set screw option for this motor is identified by the code“050”. (H1B250 A L1 BA N A PA VS FS S B 50 NN 050 N 00 NNN).
2. Referring to the Service Parts List, find the minimum displacement group. Next find the order code that relates to this unit, which is “050”. The minimum angle set screw is found to be item N1000 and part number 750646.

Adobe Acrobat 2-page viewing

While viewing manual in Adobe Acrobat, the following settings need to be applied to ensure proper page display.

1. Select “View” → “Page Display” → “Two Page View”
2. Select “View” → “Page Display” → “Show Cover Page in Two Page View”

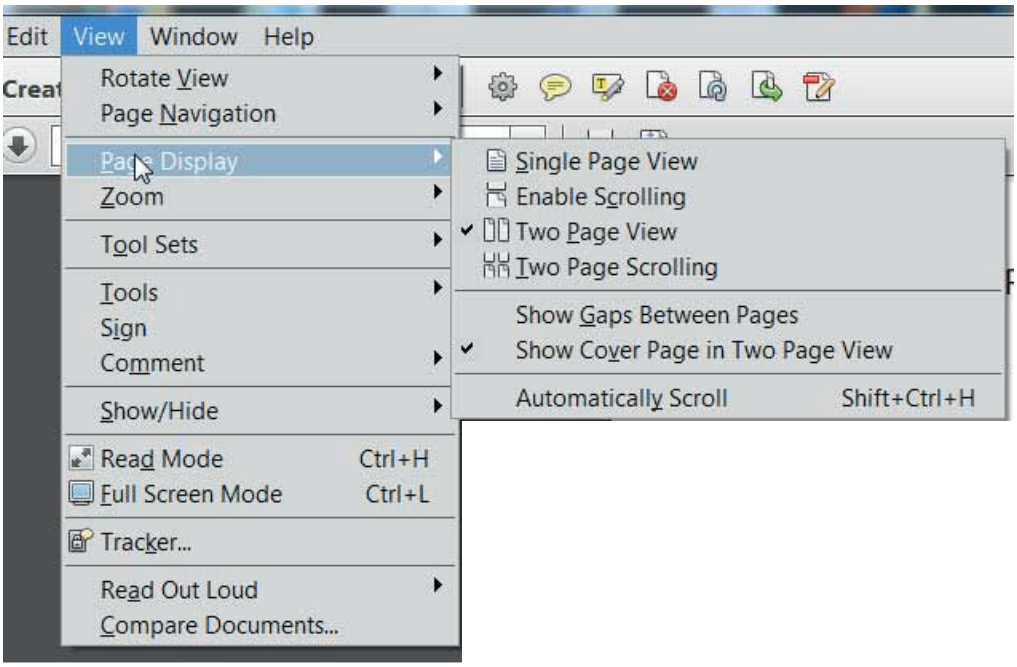

Order code

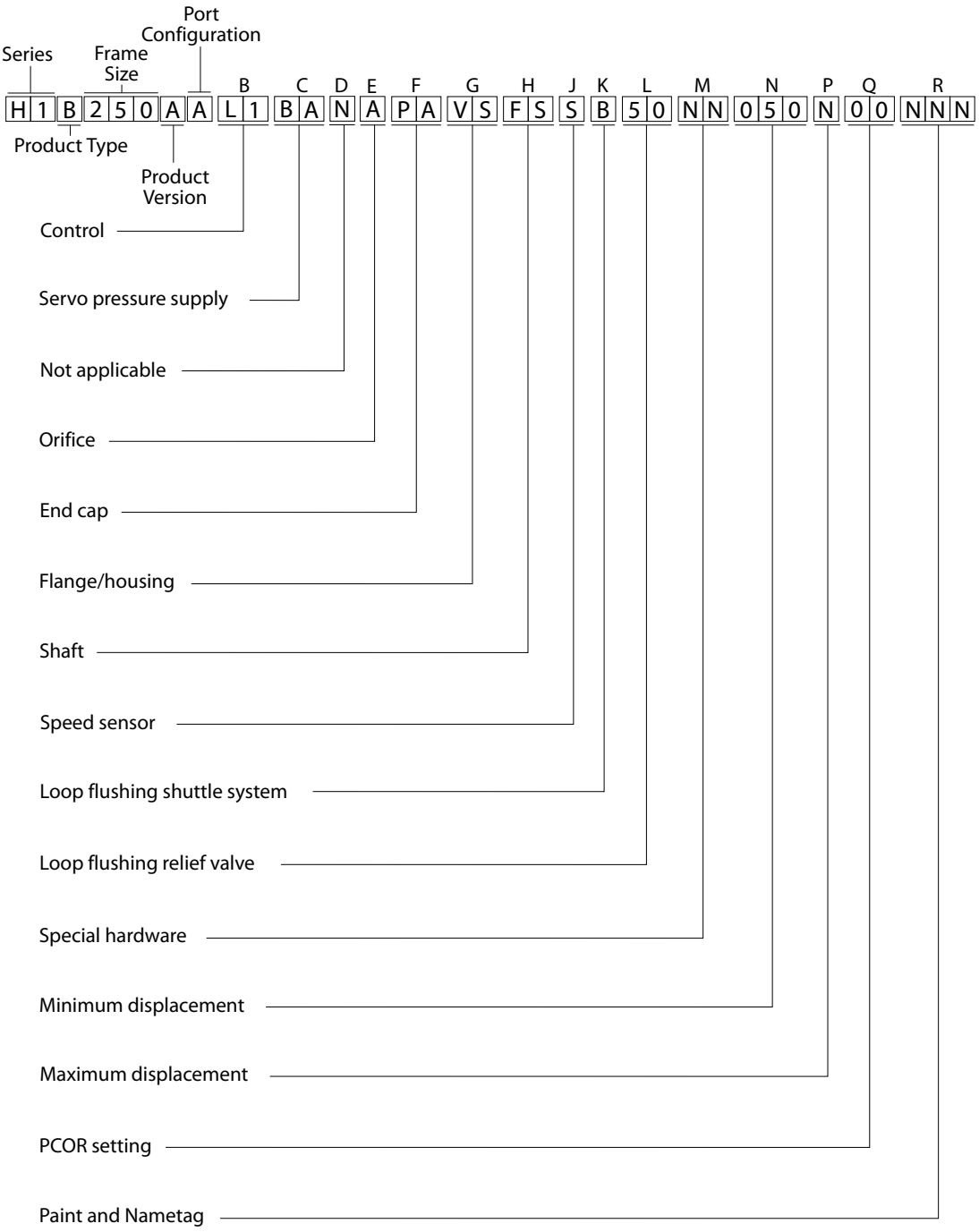
Series
Frame Size
Port Configuration
B C D E F G H J K L M N P Q R
H 1 B 2 5 0 A A L 1 B A N A P A V S F S S B 5 0 N N 0 5 0 N 0 0 N N N
Product Type
Product Version
Control
Servo pressure supply
Not applicable
Orifice
End cap
Flange/housing
Shaft
Speed sensor
Loop flushing shuttle system
Loop flushing relief valve
Special hardware
Minimum displacement
Maximum displacement
PCOR setting
Paint and Nametag

Notes

Control

H1B control D1-DH

D1 and D2 configuration

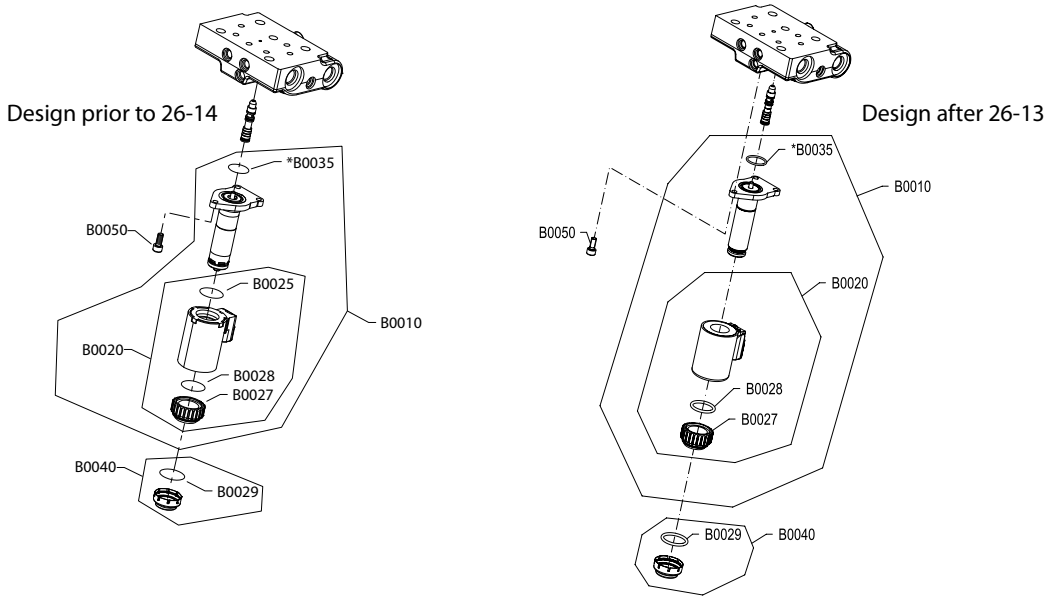

DH configuration

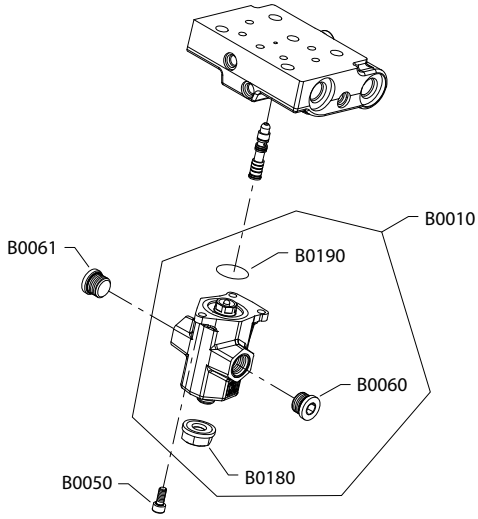

Note

Generic housings used to show part locations only.

* Included in overhaul seal kit Q210

Electric proportional

Order code: D1

Item	Date Begin	Date End	Part Number	Part Name	Qty. per Model/Kit
B0010	26-14		11321071	Solenoid valve, proportional, 12 volt	1
B0010	11-18	26-13	149053	Solenoid valve, proportional, 12 volt (*SB-2025-006* on page 118)	1
B0020	26-14		11324061	Coil kit, 12 volt	1
B0020	11-18	26-13	11031746	Coil kit, 12 volt (*SB-2025-006* on page 118)	1
B0025	11-18	26-13	11004735	O-ring	1
B0027	26-14		11324082	Coil nut	1
B0027	11-18	26-13	11004749	Coil nut (*SB-2025-006* on page 118)	1
B0028	26-14		11327430	O-ring	1
B0028	11-18	26-13	063172	O-ring (*SB-2025-006* on page 118)	1
B0029	11-18		11037174	O-ring	1
B0035	26-14		11327429	O-ring	1
B0035	11-18	26-13	11001952	O-ring (*SB-2025-006* on page 118)	1
B0040	26-14		11324081	Plastic cap	1
B0040	11-18	26-13	11014185	Plastic cap (*SB-2025-006* on page 118)	1
B0050	11-18		716860	Screw, M5 x 12	3

Order code: D2

B0010	26-14		11321122	Solenoid valve, proportional, 24 volt	1
B0010	11-18	26-13	11002705	Solenoid valve, proportional, 24 volt (*SB-2025-006* on page 118)	1
B0020	26-14		11324059	Coil kit, 24 volt	1
B0020	11-18	26-13	11031749	Coil kit, 24 volt (*SB-2025-006* on page 118)	1
B0025	11-18	26-13	11004735	O-ring	1
B0027	26-14		11324057	Coil nut	1
B0027	11-18	26-13	11004749	Coil nut (*SB-2025-006* on page 118)	1
B0028	26-14		11327430	O-ring	1
B0028	11-18	26-13	063172	O-ring (*SB-2025-006* on page 118)	1
B0029	11-18		11037174	O-ring	1
B0035	26-14		11327429	O-ring	1
B0035	11-18	26-13	11001952	O-ring (*SB-2025-006* on page 118)	1
B0040	26-14		11324081	Plastic cap	1
B0040	11-18	26-13	11014185	Plastic cap (*SB-2025-006* on page 118)	1
B0050	11-18		716860	Screw, M5 x 12	3

Hydraulic proportional

Order code: DH

B0010	14-37		11146306	Actuator assembly (SAE)	1
B0010	18-32		11224838	Actuator assembly (metric)	1
B0050	14-37		716860	Screw, M5 x 12	3
B0060	14-37		140644	Plug assembly (SAE)	1
B0060	18-32		11178808	Plug assembly (metric)	1
B0061	14-37		140644	Plug assembly (SAE)	1
B0061	18-32		11178808	Plug assembly (metric)	1
B0180	14-37		076042 (9003509-0012)	Seal nut, M12	1
B0190	14-37		012575 (9004105-1170)	O-ring	1

© Danfoss A/S, 2026

H1B control E1-F2

E1 and E2 configuration

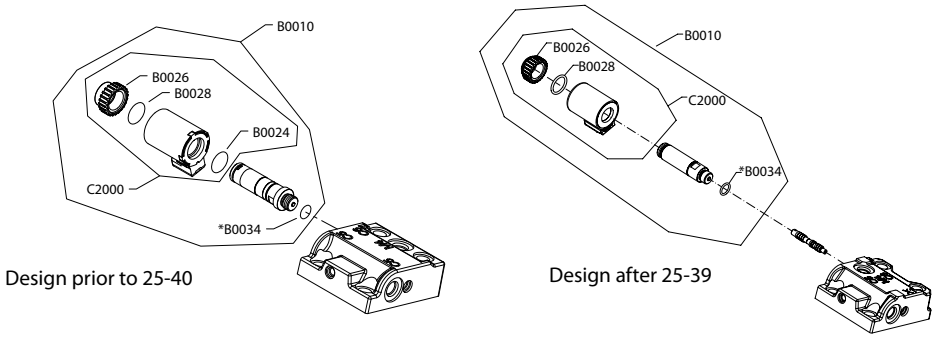

F1 and F2 configuration

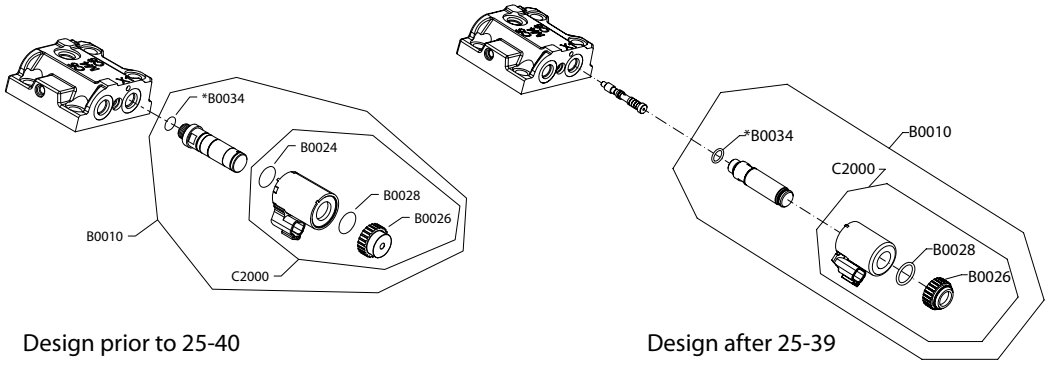

Note

Generic housings used to show part location only.

* Included in overhaul seal kit Q210

Electric 2-position

Order code: E1

Item	Date Begin	Date End	Part Number	Part Name	Qty. per Model/Kit
B0010	25-40		11321060	Solenoid, on/off, 12 volt	1
B0010	11-18	25-39	11013615	Solenoid, on/off, 12 volt (*SB-2025-006* on page 118)	1
B0024	11-18	25-39	11031608	O-ring (*SB-2025-006* on page 118)	1
B0026	25-40		11324082	Coil nut	1
B0026	11-18	25-39	11027046	Coil nut (*SB-2025-006* on page 118)	1
B0028	25-40		11327430	O-ring	1
B0028	11-18	25-39	063172	O-ring (*SB-2025-006* on page 118)	1
B0034	25-40		11327445	O-ring	1
B0034	11-18	25-39	085043 (9004201-3700)	O-ring (*SB-2025-006* on page 118)	1
C2000	25-40		11327405	Coil kit, 12 volt	1
C2000	11-18	25-39	11031763	Coil kit, 12 volt (*SB-2025-006* on page 118)	1

Order code: E2

B0010	25-40		11321061	Solenoid, on/off, 24 volt	1
B0010	11-18	25-39	11013616	Solenoid, on/off, 24 volt (*SB-2025-006* on page 118)	1
B0024	11-18	25-39	11031608	O-ring (*SB-2025-006* on page 118)	1
B0026	25-40		11324057	Coil nut	1
B0026	11-18	25-39	11027046	Coil nut (*SB-2025-006* on page 118)	1
B0028	25-40		11327430	O-ring	1
B0028	11-18	25-39	063172	O-ring (*SB-2025-006* on page 118)	1
B0034	25-40		11327445	O-ring	1
B0034	11-18	25-39	085043 (9004201-3700)	O-ring (*SB-2025-006* on page 118)	1
C2000	25-40		11327443	Coil kit, 24 volt	1
C2000	11-18	25-39	11031764	Coil kit, 24 volt (*SB-2025-006* on page 118)	1

Order code: F1

B0010	25-40		11321060	Solenoid, on/off, 12 volt	1
B0010	11-48	25-39	11013615	Solenoid, on/off, 12 volt (*SB-2025-006* on page 118)	1
B0024	11-48	25-39	11031608	O-ring (*SB-2025-006* on page 118)	1
B0026	25-40		11324082	Coil nut	1
B0026	11-48	25-39	11027046	Coil nut (*SB-2025-006* on page 118)	1
B0028	25-40		11327430	O-ring	1
B0028	11-48	25-39	063172	O-ring (*SB-2025-006* on page 118)	1
B0034	25-40		11327445	O-ring	1
B0034	11-48	25-39	085043 (9004201-3700)	O-ring (*SB-2025-006* on page 118)	1
C2000	25-40		11327405	Coil kit, 12 volt	1
C2000	11-48	25-39	11031763	Coil kit, 12 volt (*SB-2025-006* on page 118)	1

E1 and E2 configuration

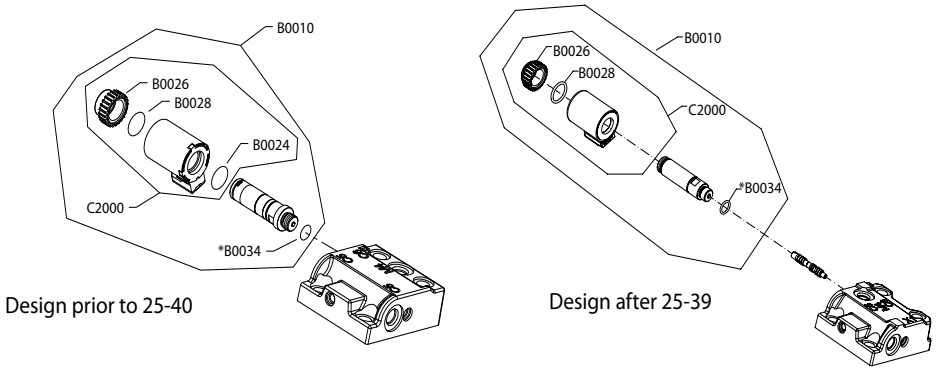

F1 and F2 configuration

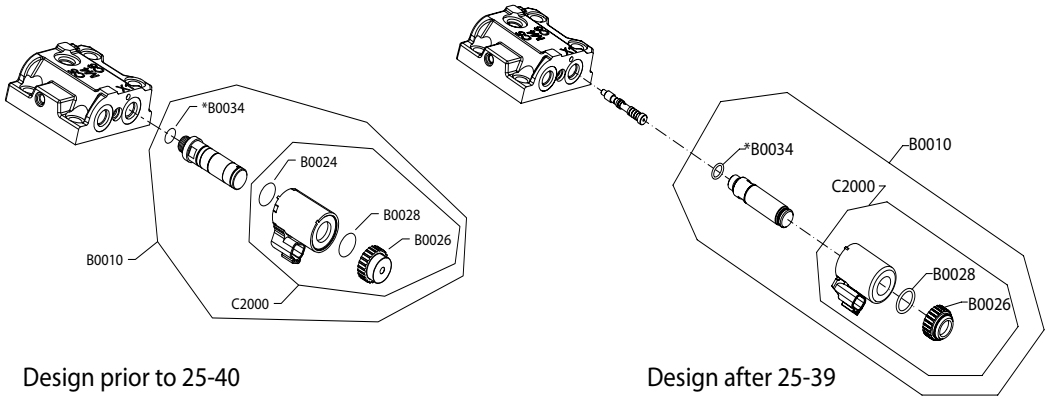

Note

Generic housings used to show part location only.

* Included in overhaul seal kit Q210

Order code: F2

Item	Date begin	Date end	Part number	Part name	Qty. per model/kit
B0010	25-40		11321061	Solenoid, on/off, 24 volt	1
B0010	11-48	25-39	11013616	Solenoid, on/off, 24 volt (*SB-2025-006* on page 118)	1
B0024	11-48	25-39	11031608	O-ring (*SB-2025-006* on page 118)	1
B0026	25-40		11324057	Coil nut	1
B0026	11-48	25-39	11027046	Coil nut (*SB-2025-006* on page 118)	1
B0028	25-40		11327430	O-ring	1
B0028	11-48	25-39	063172	O-ring (*SB-2025-006* on page 118)	1
B0034	25-40		11327445	O-ring	1
B0034	11-48	25-39	085043 (9004201-3700)	O-ring (*SB-2025-006* on page 118)	1
C2000	25-40		11327443	Coil kit, 24 volt	1
C2000	11-48	25-39	11031764	Coil kit, 24 volt (*SB-2025-006* on page 118)	1

Order code: HE and HF

No parts

H1B control K1-KH

K1, K2 configuration

Design prior to 26-14

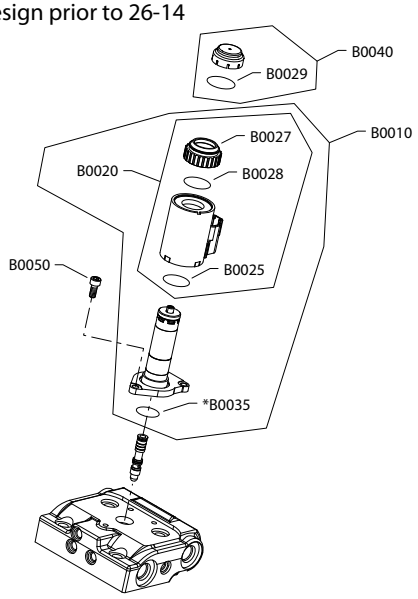

Design after 26-13

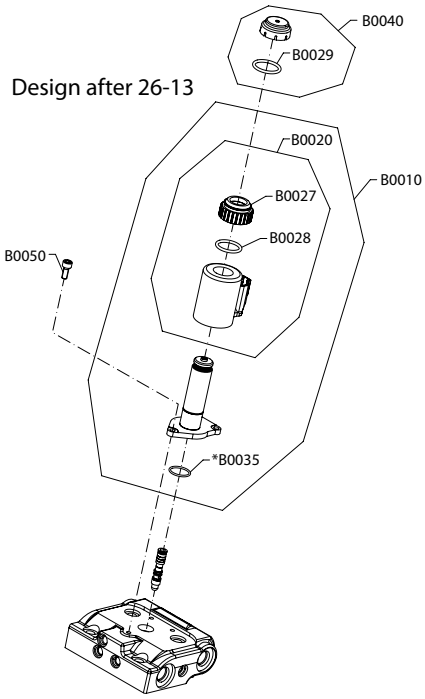

KH configuration

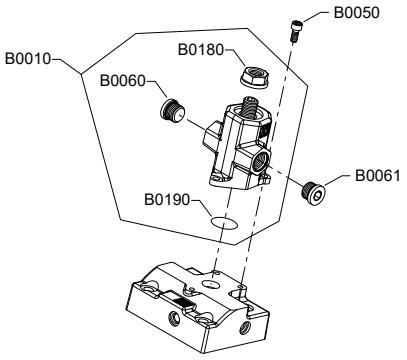

Note

Generic housing used to show part location only.

* Included in overhaul seal kit Q210

Order code: K1

Item	Date Begin	Date End	Part Number	Part Name	Qty. per Model/Kit
B0010	26-14		11321071	Solenoid valve, proportional, 12 volt	1
B0010	11-18	26-13	149053	Solenoid valve, proportional, 12 volt (*SB-2025-006* on page 118)	1
B0020	26-14		11324061	Coil kit, 12 volt	1
B0020	11-18	26-13	11031746	Coil kit, 12 volt (*SB-2025-006* on page 118)	1
B0025	11-18	26-13	11004735	O-ring	1
B0027	26-14		11324082	Coil nut	1
B0027	11-18	26-13	11004749	Coil nut (*SB-2025-006* on page 118)	1
B0028	26-14		11327430	O-ring	1
B0028	11-18	26-13	063172	O-ring (*SB-2025-006* on page 118)	1
B0029	11-18		11037174	O-ring	1
B0035	26-14		11327429	O-ring	1
B0035	11-18	26-13	11001952	O-ring (*SB-2025-006* on page 118)	1
B0040	26-14		11324081	Plastic cap	1
B0040	11-18	26-13	11014185	Plastic cap (*SB-2025-006* on page 118)	1
B0050	11-18		716860	Screw, M5 x 12	3

Order code: K2

B0010	26-14		11321122	Solenoid valve, proportional, 24 volt	1
B0010	11-18	26-13	11002705	Solenoid valve, proportional, 24 volt (*SB-2025-006* on page 118)	1
B0020	26-14		11324059	Coil kit, 24 volt	1
B0020	11-18	26-13	11031749	Coil kit, 24 volt (*SB-2025-006* on page 118)	1
B0025	11-18	26-13	11004735	O-ring	1
B0027	26-14		11324057	Coil nut	1
B0027	11-18	26-13	11004749	Coil nut (*SB-2025-006* on page 118)	1
B0028	26-14		11327430	O-ring	1
B0028	11-18	26-13	063172	O-ring (*SB-2025-006* on page 118)	1
B0029	11-18		11037174	O-ring	1
B0035	26-14		11327429	O-ring	1
B0035	11-18	26-13	11001952	O-ring (*SB-2025-006* on page 118)	1
B0040	26-14		11324081	Plastic cap	1
B0040	11-18	26-13	11014185	Plastic cap (*SB-2025-006* on page 118)	1
B0050	11-18		716860	Screw, M5 x 12	3

Order code: KH

B0010	15-48		11146306	Actuator assembly	1
B0050	15-48		716860	Screw, M5 x 12	3
B0060	15-48		140644	Plug assembly	1
B0061	15-48		140644	Plug assembly	1
B0180	15-48		076042 (9003509-0012)	Seal nut, M12	1
B0190	15-48		012575 (9004105-1170)	O-ring	1

© Danfoss A/S, 2026

H1B control L1-LH

L1 and L2 configuration

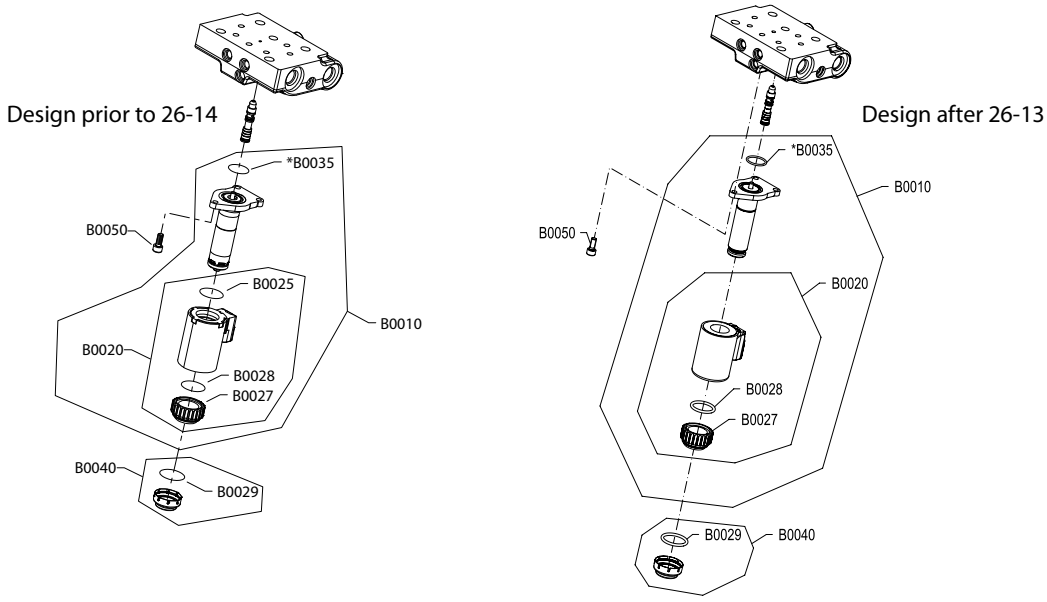

LH configuration

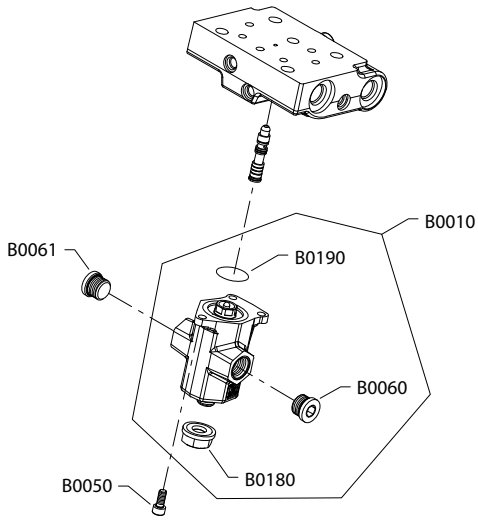

Note

Generic housings used to show part locations only.

* Included in overhaul seal kit Q210

Note

Option LH is available in SAE and metric. Please order accordingly

Electric proportional

Order code: L1

Item	Date Begin	Date End	Part Number	Part Name	Qty. per Model/Kit
B0010	26-14		11321071	Solenoid valve, proportional, 12 volt	1
B0010	11-18	26-13	149053	Solenoid valve, proportional, 12 volt (*SB-2025-006* on page 118)	1
B0020	26-14		11324061	Coil kit, 12 volt	1
B0020	11-18	26-13	11031746	Coil kit, 12 volt (*SB-2025-006* on page 118)	1
B0025	11-18	26-13	11004735	O-ring	1
B0027	26-14		11324082	Coil nut	1
B0027	11-18	26-13	11004749	Coil nut (*SB-2025-006* on page 118)	1
B0028	26-14		11327430	O-ring	1
B0028	11-18	26-13	063172	O-ring (*SB-2025-006* on page 118)	1
B0029	11-18		11037174	O-ring	1
B0035	26-14		11327429	O-ring	1
B0035	11-18	26-13	11001952	O-ring (*SB-2025-006* on page 118)	1
B0040	26-14		11324081	Plastic cap	1
B0040	11-18	26-13	11014185	Plastic cap (*SB-2025-006* on page 118)	1
B0050	11-18		716860	Screw, M5 x 12	3

Order code: L2

B0010	26-14		11321122	Solenoid valve, proportional, 24 volt	1
B0010	11-18	26-13	11002705	Solenoid valve, proportional, 24 volt (*SB-2025-006* on page 118)	1
B0020	26-14		11324059	Coil kit, 24 volt	1
B0020	11-18	26-13	11031749	Coil kit, 24 volt (*SB-2025-006* on page 118)	1
B0025	11-18	26-13	11004735	O-ring	1
B0027	26-14		11324057	Coil nut	1
B0027	11-18	26-13	11004749	Coil nut (*SB-2025-006* on page 118)	1
B0028	26-14		11327430	O-ring	1
B0028	11-18	26-13	063172	O-ring (*SB-2025-006* on page 118)	1
B0029	11-18		11037174	O-ring	1
B0035	26-14		11327429	O-ring	1
B0035	11-18	26-13	11001952	O-ring (*SB-2025-006* on page 118)	1
B0040	26-14		11324081	Plastic cap	1
B0040	11-18	26-13	11014185	Plastic cap (*SB-2025-006* on page 118)	1
B0050	11-18		716860	Screw, M5 x 12	3

Hydraulic proportional

Order code: LH

B0010	14-37		11146306	Actuator assembly (SAE)	1
B0010	18-32		11224838	Actuator assembly (metric)	1
B0050	14-37		716860	Screw, M5 x 12	3
B0060	14-37		140644	Plug assembly (SAE)	1
B0060	18-32		11178808	Plug assembly (metric)	1
B0061	14-37		140644	Plug assembly (SAE)	1
B0061	18-32		11178808	Plug assembly (metric)	1
B0180	14-37		076042 (9003509-0012)	Seal nut, M12	1
B0190	14-37		012575 (9004105-1170)	O-ring	1

© Danfoss A/S, 2026

H1B control M1-MH

M1, M2 configuration

Design prior to 26-14

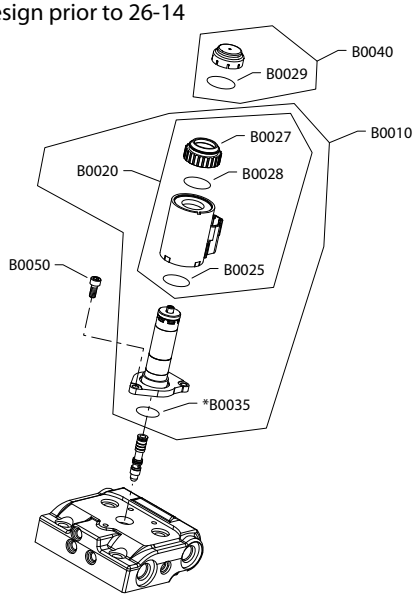

Design after 26-13

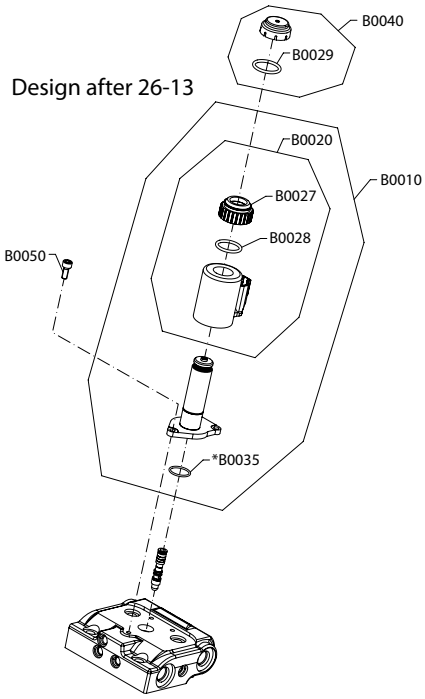

MH configuration

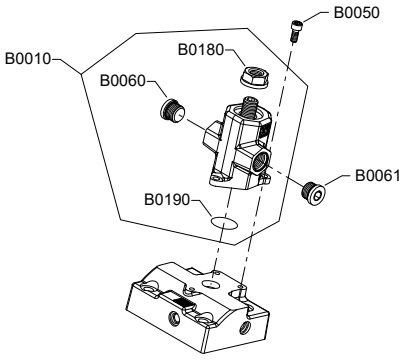

Note

Generic housing used to show part location only.

* Included in overhaul seal kit Q210

Order code: M1

Item	Date Begin	Date End	Part Number	Part Name	Qty. per Model/Kit
B0010	26-14		11321071	Solenoid valve, proportional, 12 volt	1
B0010	11-18	26-13	149053	Solenoid valve, proportional, 12 volt (*SB-2025-006* on page 118)	1
B0020	26-14		11324061	Coil kit, 12 volt	1
B0020	11-18	26-13	11031746	Coil kit, 12 volt (*SB-2025-006* on page 118)	1
B0025	11-18	26-13	11004735	O-ring	1
B0027	26-14		11324082	Coil nut	1
B0027	11-18	26-13	11004749	Coil nut (*SB-2025-006* on page 118)	1
B0028	26-14		11327430	O-ring	1
B0028	11-18	26-13	063172	O-ring (*SB-2025-006* on page 118)	1
B0029	11-18		11037174	O-ring	1
B0035	26-14		11327429	O-ring	1
B0035	11-18	26-13	11001952	O-ring (*SB-2025-006* on page 118)	1
B0040	26-14		11324081	Plastic cap	1
B0040	11-18	26-13	11014185	Plastic cap (*SB-2025-006* on page 118)	1
B0050	11-18		716860	Screw, M5 x 12	3

Order code: M2

B0010	26-14		11321122	Solenoid valve, proportional, 24 volt	1
B0010	11-18	26-13	11002705	Solenoid valve, proportional, 24 volt (*SB-2025-006* on page 118)	1
B0020	26-14		11324059	Coil kit, 24 volt	1
B0020	11-18	26-13	11031749	Coil kit, 24 volt (*SB-2025-006* on page 118)	1
B0025	11-18	26-13	11004735	O-ring	1
B0027	26-14		11324057	Coil nut	1
B0027	11-18	26-13	11004749	Coil nut (*SB-2025-006* on page 118)	1
B0028	26-14		11327430	O-ring	1
B0028	11-18	26-13	063172	O-ring (*SB-2025-006* on page 118)	1
B0029	11-18		11037174	O-ring	1
B0035	26-14		11327429	O-ring	1
B0035	11-18	26-13	11001952	O-ring (*SB-2025-006* on page 118)	1
B0040	26-14		11324081	Plastic cap	1
B0040	11-18	26-13	11014185	Plastic cap (*SB-2025-006* on page 118)	1
B0050	11-18		716860	Screw, M5 x 12	3

Order code: MH

B0010	14-23		11146306	Actuator assembly	1
B0050	14-23		716860	Screw, M5 x 12	3
B0060	14-23		140644	Plug assembly	1
B0061	14-23		140644	Plug assembly	1
B0180	14-23		076042 (9003509-0012)	Seal nut, M12	1
B0190	14-23		012575 (9004105-1170)	O-ring	1

Order code: N1, NA, NB

No parts

H1B control P1-T2

P1 and P2 configuration

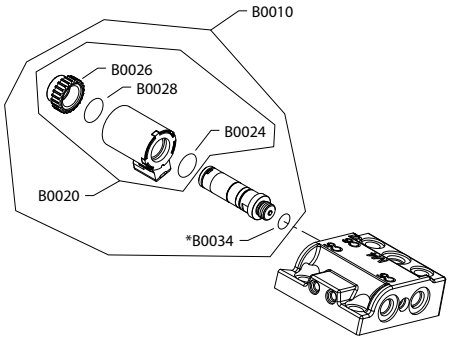

Design prior to 25-40

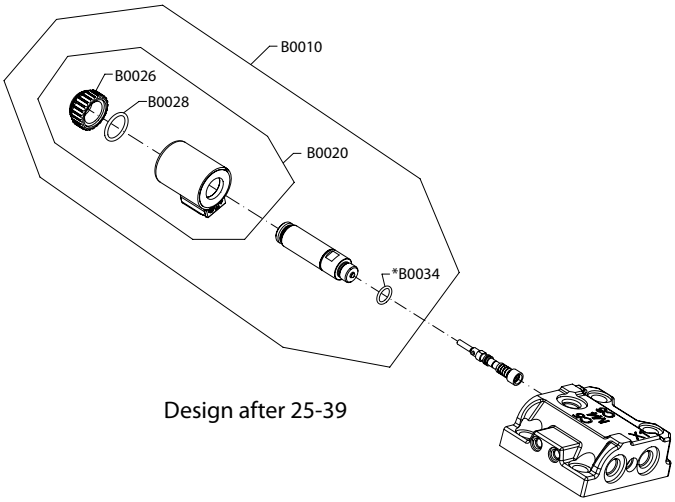

Design after 25-39

Note

Generic housings used to show part location only.

* Included in overhaul seal kit Q210

Order code: P1

Item	Date Begin	Date End	Part Number	Part Name	Qty. per Model/Kit
B0010	25-40		11321105	Solenoid valve, proportional, 12 volt	1
B0010	11-18	25-39	11013613	Solenoid valve, proportional, 12 volt (*SB-2025-006* on page 118)	1
B0020	25-40		11327441	Coil kit, 12 volt	1
B0020	11-18	25-39	11031751	Coil kit, 12 volt (*SB-2025-006* on page 118)	1
B0024	11-18	25-39	11031608	O-ring	1
B0026	25-40		11324082	Coil nut	1
B0026	11-18	25-39	11027046	Coil nut (*SB-2025-006* on page 118)	1
B0028	25-40		11327430	O-ring	1
B0028	11-18	25-39	063172	O-ring (*SB-2025-006* on page 118)	1
B0034	25-40		11327445	O-ring	1
B0034	11-18	25-39	085043 (9004201-3700)	O-ring (*SB-2025-006* on page 118)	1

Order code: P2

B0010	25-40		11321106	Solenoid valve, proportional, 24 volt	1
B0010	11-18	25-39	11013614	Solenoid valve, proportional, 24 volt (*SB-2025-006* on page 118)	1
B0020	25-40		11327440	Coil kit, 24 volt	1
B0020	11-18	25-39	11031762	Coil kit, 24 volt (*SB-2025-006* on page 118)	1
B0024	11-18	25-39	11031608	O-ring	1
B0026	25-40		11324057	Coil nut	1
B0026	11-18	25-39	11027046	Coil nut (*SB-2025-006* on page 118)	1
B0028	25-40		11327430	O-ring	1
B0028	11-18	25-39	063172	O-ring (*SB-2025-006* on page 118)	1
B0034	25-40		11327445	O-ring	1
B0034	11-18	25-39	085043 (9004201-3700)	O-ring (*SB-2025-006* on page 118)	1

© Danfoss A/S, 2026

R2 configuration

Design prior 25-40 prop-thread;
Design prior 26-14 prop

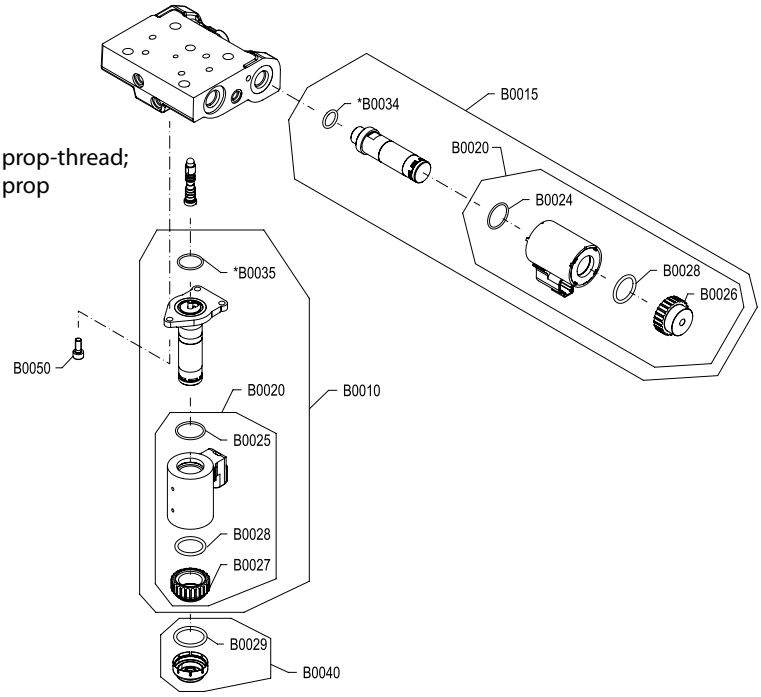

Design after 25-39 prop-thread;
Design after 26-13 prop

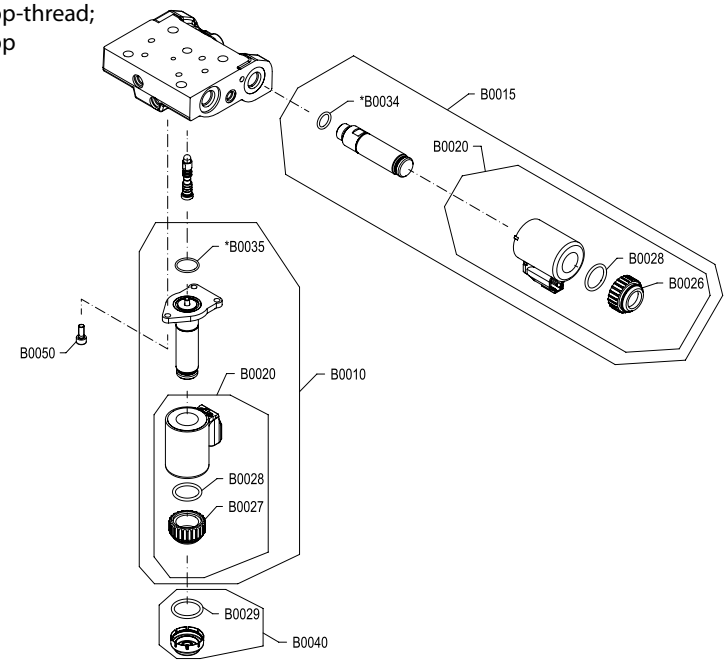

Note

Generic housings used to show part location only.

* Included in overhaul seal kit Q210

Order code: R2

Item	Date Begin	Date End	Part Number	Part Name	Qty. per Model/Kit
B0010	26-14		11321122	Solenoid valve, proportional, 24 volt	1
B0010	20-21	26-13	11002705	Solenoid valve, proportional, 24 volt (*SB-2025-006* on page 118)	1
B0015	25-40		11321106	Solenoid valve, prop-thread, 24 volt	1
B0015	20-21	25-39	11013614	Solenoid valve, prop-thread, 24 volt (*SB-2025-006* on page 118)	1
B0020	26-14		11324059	Coil kit prop, 24 volt	1
B0020	20-21	26-13	11031749	Coil kit prop, 24 volt (*SB-2025-006* on page 118)	1
B0020	25-40		11327440	Coil kit prop-thread, 24 volt	1
B0020	20-21	25-39	11031762	Coil kit prop-thread, 24 volt (*SB-2025-006* on page 118)	1
B0024	20-21	25-39	11031608	O-ring	1
B0025	20-21	26-13	11004735	O-ring	1
B0026	26-14		11324057	Coil nut	1
B0026	20-21	26-13	11027046	Coil nut (*SB-2025-006* on page 118)	1
B0027	25-40		11324057	Coil nut	1
B0027	20-21	25-39	11004749	Coil nut (*SB-2025-006* on page 118)	1
B0028	25-40		11327430	O-ring	1
B0028	20-21	25-39	063172	O-ring (*SB-2025-006* on page 118)	1
B0029	20-21		11037174	O-ring	1
B0034	26-14		11327445	O-ring	1
B0034	20-21	26-13	085043	O-ring (*SB-2025-006* on page 118)	1
B0035	25-40		11327429	O-ring	1
B0035	20-21	25-39	11001952	O-ring (*SB-2025-006* on page 118)	1
B0040	26-14		11324081	Plastic cap	1
B0040	20-21	26-13	11014185	Plastic cap (*SB-2025-006* on page 118)	1
B0050	20-21		716860	Screw, M5 x 12	3

© Danfoss A/S, 2026

S1 configuration

Design prior 25-40 prop-thread;
Design prior 26-14 prop

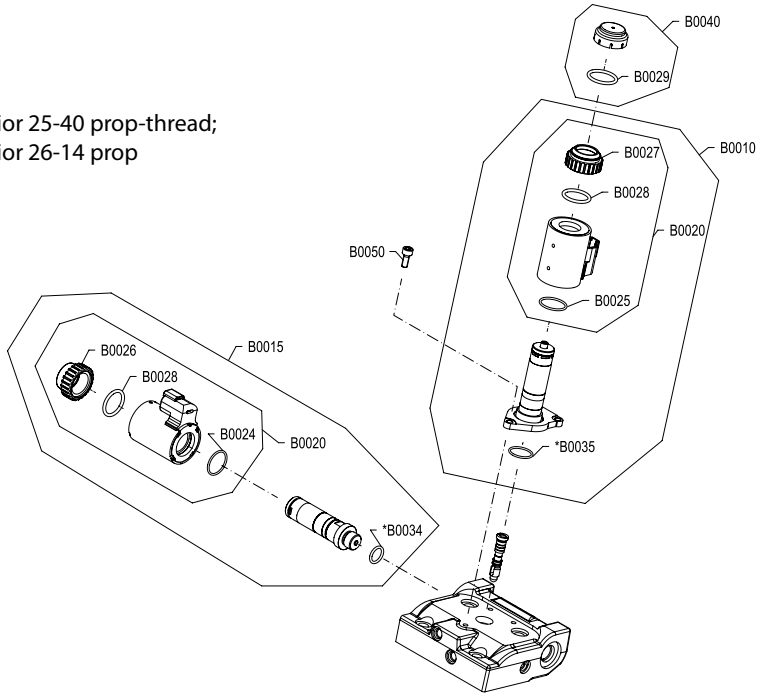

Design after 25-39 prop-thread;
Design after 26-13 prop

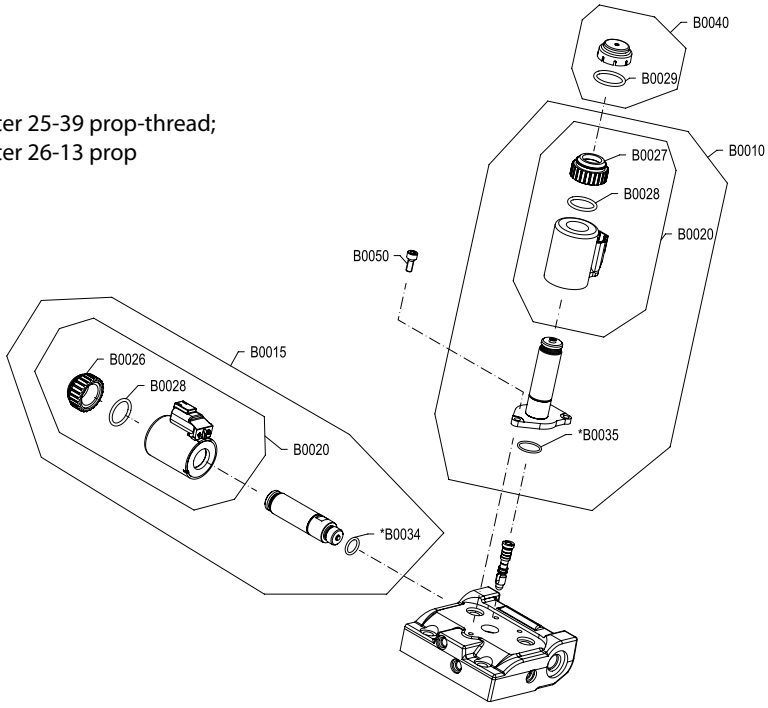

Note

Generic housings used to show part location only.

* Included in overhaul seal kit Q210

Order code: S1

Item	Date Begin	Date End	Part Number	Part Name	Qty. per Model/Kit
B0010	26-14		11321071	Solenoid valve, proportional, 12 volt	1
B0010	20-21	26-13	149053	Solenoid valve, proportional, 12volt (*SB-2025-006* on page 118)	1
B0015	25-40		11321105	Solenoid valve, prop-thread, 12 volt	1
B0015	20-21	25-39	11013613	Solenoid valve, prop-thread, 12 volt (*SB-2025-006* on page 118)	1
B0020	26-14		11324061	Coil kit prop, 12 volt	1
B0020	20-21	26-13	11031746	Coil kit prop, 12 volt (*SB-2025-006* on page 118)	1
B0020	25-40		11327441	Coil kit prop-thread, 12 volt	1
B0020	20-21	25-39	11031751	Coil kit prop-thread, 12 volt (*SB-2025-006* on page 118)	1
B0024	20-21	25-39	11031608	O-ring	1
B0025	20-21	26-13	11004735	O-ring	1
B0026	26-14		11324082	Coil nut	1
B0026	20-21	26-13	11027046	Coil nut (*SB-2025-006* on page 118)	1
B0027	25-40		11324082	Coil nut	1
B0027	20-21	25-39	11004749	Coil nut (*SB-2025-006* on page 118)	1
B0028	25-40		11327430	O-ring	1
B0028	20-21	25-39	063172	O-ring (*SB-2025-006* on page 118)	1
B0029	20-21		11037174	O-ring	1
B0034	26-14		11327445	O-ring	1
B0034	20-21	26-13	085043	O-ring (*SB-2025-006* on page 118)	1
B0035	25-40		11327429	O-ring	1
B0035	20-21	25-39	11001952	O-ring (*SB-2025-006* on page 118)	1
B0040	26-14		11324081	Plastic cap	1
B0040	20-21	26-13	11014185	Plastic cap (*SB-2025-006* on page 118)	1
B0050	20-21		716860	Screw, M5 x 12	3

T1 and T2 configuration

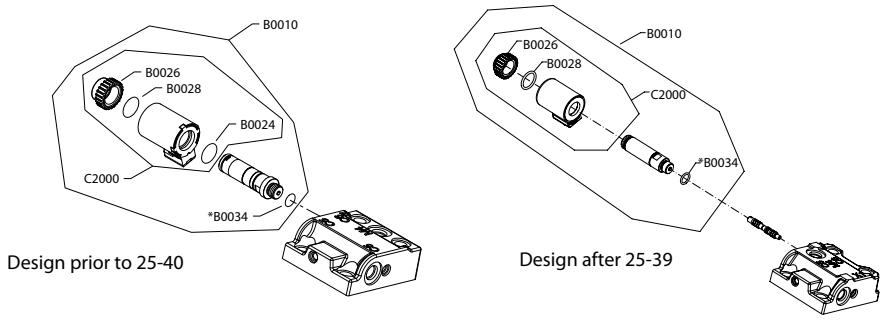

Note

Generic housings used to show part location only.

* Included in overhaul seal kit Q210

Order code: T1

Item	Date Begin	Date End	Part Number	Part Name	Qty. per Model/Kit
B0010	25-40		11321060	Solenoid, on/off, 12 volt	1
B0010	11-18	25-39	11013615	Solenoid, on/off, 12 volt (*SB-2025-006* on page 118)	1
B0024	11-18	25-39	11031608	O-ring	1
B0026	25-40		11324082	Coil nut	1
B0026	11-18	25-39	11027046	Coil nut (*SB-2025-006* on page 118)	1
B0028	25-40		11327430	O-ring	1
B0028	11-18	25-39	063172	O-ring (*SB-2025-006* on page 118)	1
B0034	25-40		11327445	O-ring	1
B0034	11-18	25-39	085043 (9004201-3700)	O-ring (*SB-2025-006* on page 118)	1
C2000	25-40		11327405	Coil kit, 12 volt	1
C2000	11-18	25-39	11031763	Coil kit, 12 volt (*SB-2025-006* on page 118)	1

Order code: T2

B0010	25-40		11321061	Solenoid, on/off, 24 volt	1
B0010	11-18	25-39	11013616	Solenoid, on/off, 24 volt (*SB-2025-006* on page 118)	1
B0024	11-18	25-39	11031608	O-ring	1
B0026	25-40		11324057	Coil nut	1
B0026	11-18	25-39	11027046	Coil nut (*SB-2025-006* on page 118)	1
B0028	25-40		11327430	O-ring	1
B0028	11-18	25-39	063172	O-ring (*SB-2025-006* on page 118)	1
B0034	25-40		11327445	O-ring	1
B0034	11-18	25-39	085043 (9004201-3700)	O-ring (*SB-2025-006* on page 118)	1
C2000	25-40		11327443	Coil kit, 24 volt	1
C2000	11-18	25-39	11031764	Coil kit, 24 volt (*SB-2025-006* on page 118)	1

© Danfoss A/S, 2026

H1B control TA-TH

TA configuration

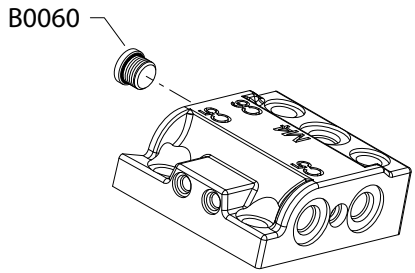

TH configuration

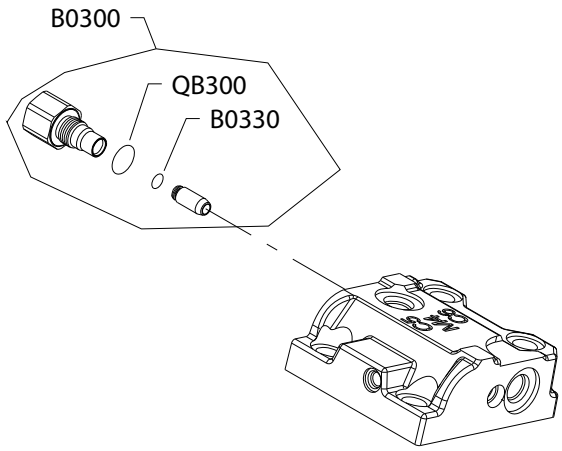

Generic housings used to show part location only.

* Included in overhaul seal kit Q210

Order code: TA

Item	Date Begin	Date Begin	Part Number	Part Name	Qty. per Model/Kit
B0060	11-46		140644	Plug assembly	1

Order code: TH

B0300	15-27		11157844	PCOR override adapter assembly	1
B0330	15-27		11164139	O-ring	1
QB300	15-27		085043 (9004201-3700)	O-ring	1

Servo pressure supply

H1B servo pressure AA, AD

AA configuration

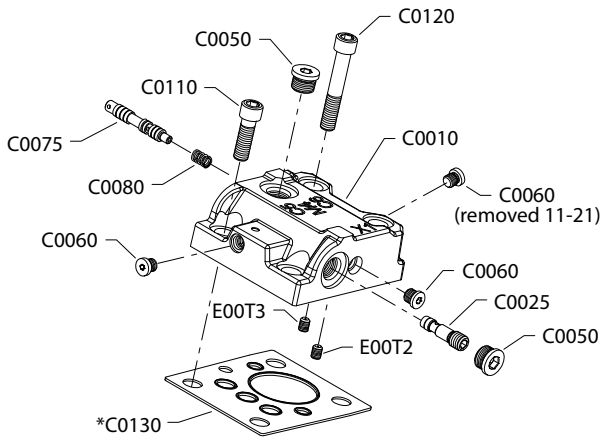

AD configuration

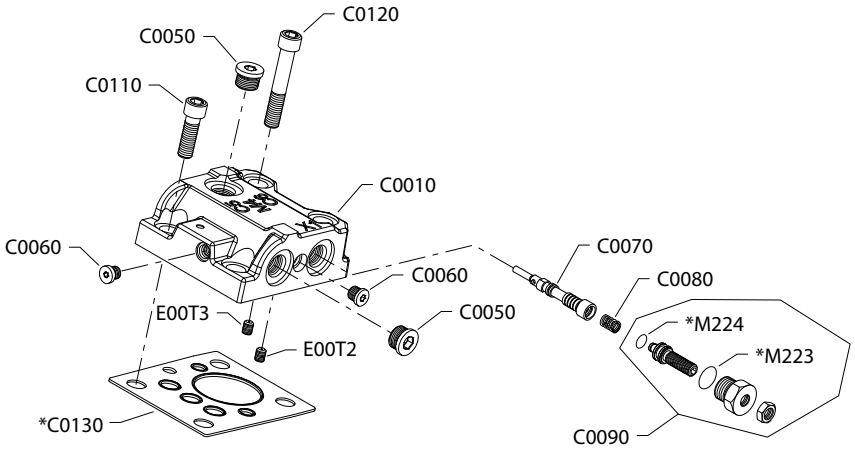

* Included in overhaul seal kit Q210

Note

Option AA is available in SAE and metric. Please order accordingly.

Order code: AA

Item	Date Begin	Date End	Part Number	Part Name	Qty. per Model/Kit
C0010	08-14		11086113	Control housing, 2-position (SAE)	1
C0010	15-40		11171632	Control housing, 2-position (metric)	1
C0025	08-14		11337782	Shuttle valve assembly	1
C0050	08-14		140644	Plug assembly (SAE)	2
C0050	15-40		5000438	Plug assembly (metric)	2
C0050	15-40		11178808	Plug assembly (metric)	2
C0060	11-22		11040532	Plug assembly	2
C0060	08-14	11-21	11040532	Plug assembly	3
C0075	08-14		11016166	Spool	1
C0080	08-14		11160236	Spring	1
C0110	08-14		737866 (9007314-1207)	Screw, M12 x 30	2
C0120	08-14		283325 (9007314-1211)	Screw, M12 x 50	2
C0130	08-14		11016168	Control seal	1

Order code: AD

C0010	12-14		11110070	Control housing, 2-position	1
C0050	12-14		140644	Plug assembly (SAE)	2
C0060	11-22				
C0060	11-22		11040532	Plug assembly	2
C0070	12-14		11016228	Spool	1
C0080	12-14		11160236	Spring (SAE)	1
C0090	12-14		509360	Adjuster	1
C0110	12-14		737866 (9007314-1207)	Screw, M12 x 30	2
C0120	12-14		283325 (9007314-1211)	Screw, M12 x 50	2
C0130	12-14		11016168	Control seal	1
M223	12-14		085043 (9004201-3700)	O-ring	1
M224	12-14		732479	O-ring	1

© Danfoss A/S, 2026

H1B servo pressure BA, BB

BA configuration

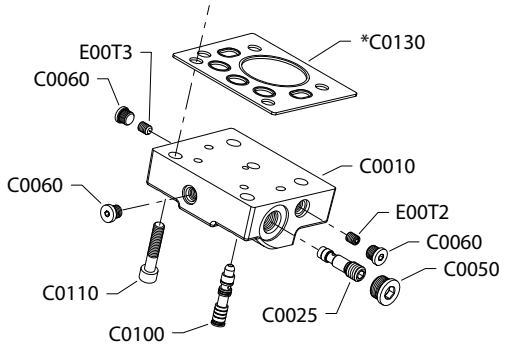

BB configuration

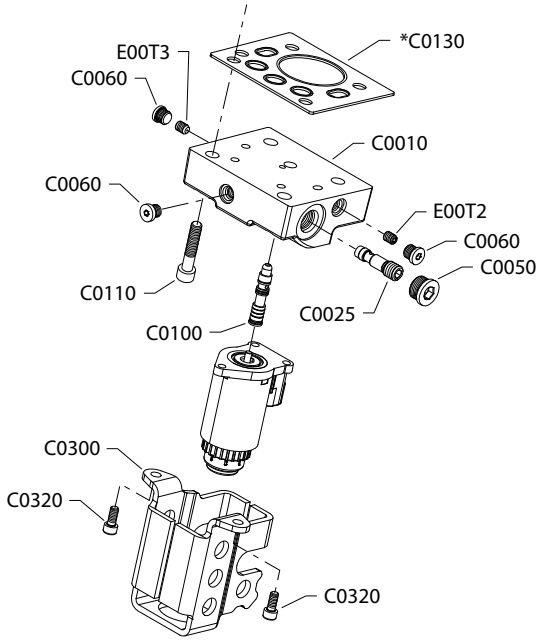

Note

Option BA and BB are available in SAE and metric. Please order accordingly.

* Included in overhaul seal kit Q210

Order code: BA

Item	Date Begin	Date End	Part Number	Part Name	Qty. per Model/Kit
C0010	11-18		149057	Control housing, proportional (SAE)	1
C0010	15-45		11161819	Control housing, proportional (metric)	1
C0025	11-18		11337782	Shuttle valve assembly	1
C0050	11-18		140644	Plug assembly (SAE)	1
C0050	15-45		11178808	Plug assembly (metric)	1
C0060	11-18		11040532	Plug assembly	3
C0100	11-18		11146871	Spool (SAE)	1
C0100	15-45		11146871	Spool (metric)	1
C0110	11-18		710855	Screw, M8 x 35	4
C0130	11-18		149040	Control seal	1

Order code: BB

C0010	12-24		11116918	Control housing, proportional (SAE)	1
C0010	16-49		11169197	Control housing, proportional (metric)	1
C0025	12-24		11337782	Shuttle valve assembly	1
C0050	12-24		140644	Plug assembly (SAE)	1
C0050	16-49		11178808	Plug assembly (metric)	1
C0060	12-24		11040532	Plug assembly	3
C0100	12-24		11146871	Spool (SAE)	1
C0110	12-24		710855	Screw, M8 x 35	4
C0130	12-24		149040	Control seal	1
C0300	12-24		11086158	Protective cover	1
C0320	12-24		395822	Screw, M6 x 12mm	2

H1B servo pressure CA

Parts configuration

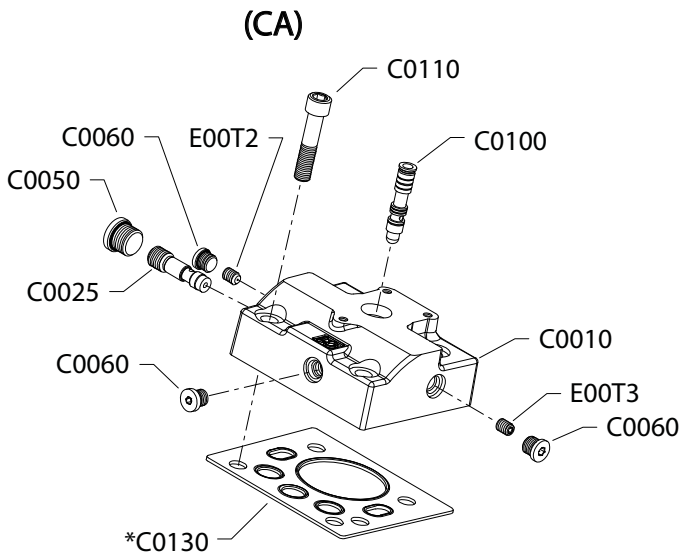

* Included in overhaul seal kit Q210

Note

Option BC is only available in metric configuration. Option CA is available is both SAE and metric configurations. Please order accordingly.

Order code: CA

Item	Date Begin	Date End	Part Number	Part Name	Qty. per Model/Kit
C0010	11-18		149057	Control housing, proportional (SAE)	1
C0010	16-35		11161819	Control housing, proportional (metric)	1
C0025	11-18		11337782	Shuttle valve assembly	1
C0050	11-18		140644	Plug assembly (SAE)	1
C0050	16-35		11178808	Plug assembly (metric)	1
C0060	11-18		11040532	Plug assembly	3
C0100	11-18		11146871	Spool (SAE)	1
C0100	16-35		11146871	Spool (metric)	1
C0110	11-18		710855	Screw, M8 x 35	4
C0130	11-18		149040	Control seal	1

© Danfoss A/S, 2026

H1B servo pressure D1, D2

D1 and D2 configuration

Design prior to 25-40

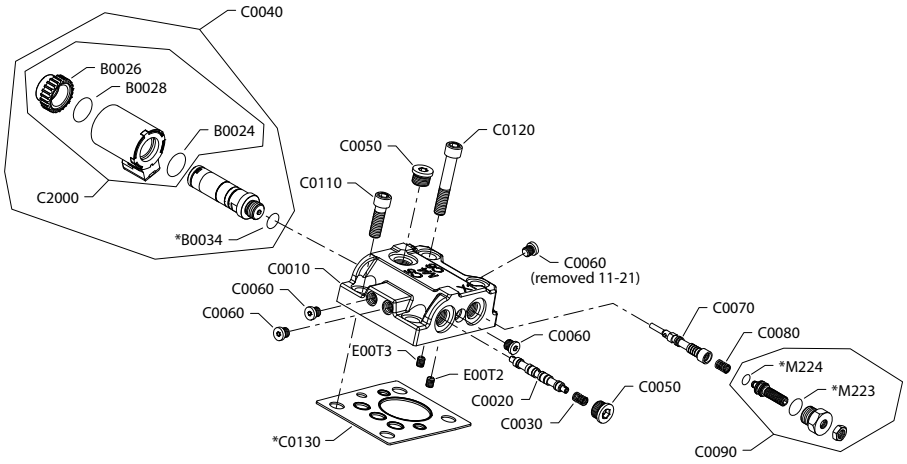

Design after 25-39

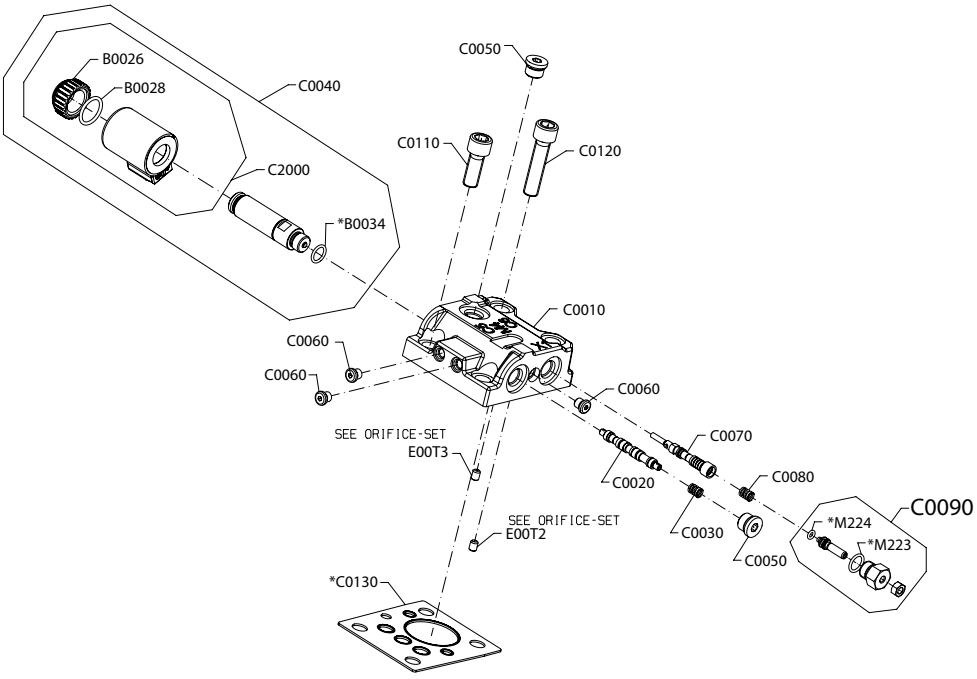

* Included in overhaul seal kit Q210

Order code: D1 and D2 common parts

Item	Date Begin	Date End	Part Number	Part Name	Qty. per Model/Kit
B0024	11-18	25-39	11031608	O-ring	1
B0028	25-40		11327430	O-ring	1
B0028	11-18	25-39	063172	O-ring (*SB-2025-006* on page 118)	1
B0034	25-40		11327445	O-ring	1
B0034	11-18	25-39	085043 (9004201-3700)	O-ring (*SB-2025-006* on page 118)	1
C0010	11-18		11086114	Control housing, PCOR	1
C0020	11-18		11016229	Spool	1
C0030	11-18		11160236	Spring	1
C0050	11-18		140644	Plug assembly (SAE)	2
C0060	11-22		11040532	Plug assembly	3
C0060	11-18	11-21	11040532	Plug assembly	4
C0070	11-18		11016228	Spool	1
C0080	11-18		11160236	Spring	1
C0090	11-18		509360	Adjuster	1
C0110	11-18		737866 (9007314-1207)	Screw, M12 x 30	2
C0120	11-18		283325 (9007314-1211)	Screw, M12 x 50	2
C0130	11-18		11016168	Control seal	1
M223	11-18		085043 (9004201-3700)	O-ring	1
M224	11-18		732479	O-ring	1

Order code: D1

C0040	25-40		11321060	Solenoid, on/off, 12 volt	1
C0040	11-18	25-39	11013615	Solenoid, on/off, 12 volt (*SB-2025-006* on page 118)	1
C2000	25-40		11327405	Coil kit, 12 volt	1
C2000	11-18	25-39	11031763	Coil kit, 12 volt (*SB-2025-006* on page 118)	1
B0026	25-40		11324082	Coil nut, black	1
B0026	11-18	25-39	11027046	Coil nut (*SB-2025-006* on page 118)	1

Order code: D2

C0040	25-40		11321061	Solenoid, on/off, 24 volt	1
C0040	11-18	25-39	11013616	Solenoid, on/off, 24 volt (*SB-2025-006* on page 118)	1
C2000	25-40		11327443	Coil kit, 24 volt	1
C2000	11-18	25-39	11031764	Coil kit, 24 volt (*SB-2025-006* on page 118)	1
B0026	25-40		11324057	Coil nut, blue	1
B0026	11-18	25-39	11027046	Coil nut (*SB-2025-006* on page 118)	1

© Danfoss A/S, 2026

H1B servo pressure DA, EA

DA configuration

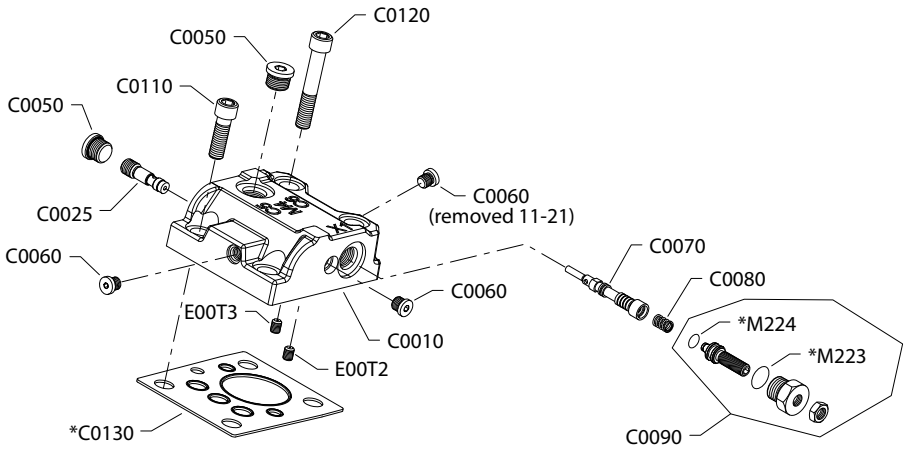

EA configuration

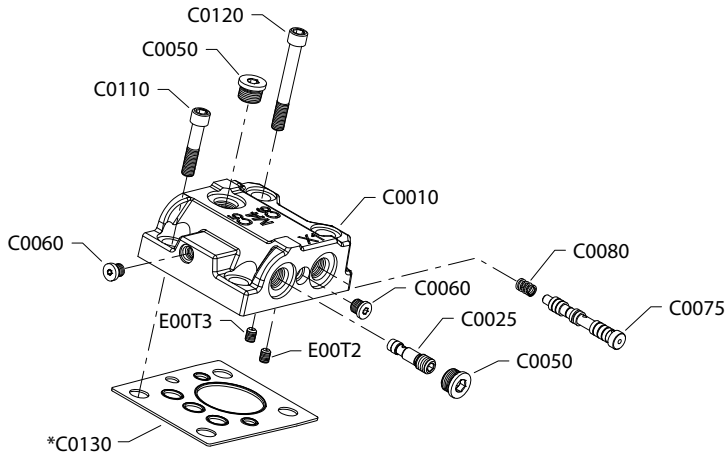

* Included in overhaul seal kit Q210

Order code: DA

Item	Date Begin	Date End	Part Number	Part Name	Qty. per Model/Kit
C0010	11-18		11086115	Control housing, PCOR	1
C0025	11-18		11337782	Shuttle valve assembly	1
C0050	11-18		140644	Plug assembly (SAE)	2
C0060	11-22		11040532	Plug assembly	2
C0060	11-18	11-21	11040532	Plug assembly	3
C0070	11-18		11016228	Spool	1
C0080	11-18		11160236	Spring	1
C0090	11-18		509360	Adjuster	1
C0110	08-14		737866	Screw, M12 x 30	2
C0120	08-14		283325	Screw, M12 x 50	2
C0130	08-14		11016168	Control seal	1
M223	11-18		085043 (9004201-3700)	O-ring	1
M224	11-18		732479	O-ring	1

Order code: EA

C0010	11-22		11099281	Control housing, 2-position	1
C0025	11-22		11337782	Shuttle valve assembly	1
C0050	11-22		140644	Plug assembly	1
C0060	11-22		11040532	Plug assembly	2
C0075	11-22		11122114	Spool, 2-position	1
C0080	11-22		11160236	Spring	1
C0110	11-22		737866 (9007314-1207)	Screw, M12 x 30	2
C0120	11-22		283325 (9007314-1211)	Screw, M12 x 50	2
C0130	11-22		11016168	Control seal	1

© Danfoss A/S, 2026

H1B servo pressure G1, G2

G1 and G2 configuration

Design prior to 25-40

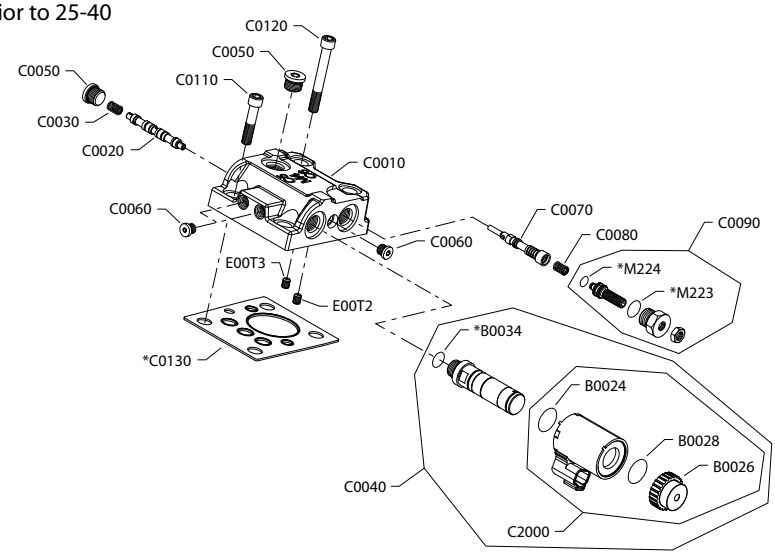

Design after 25-39

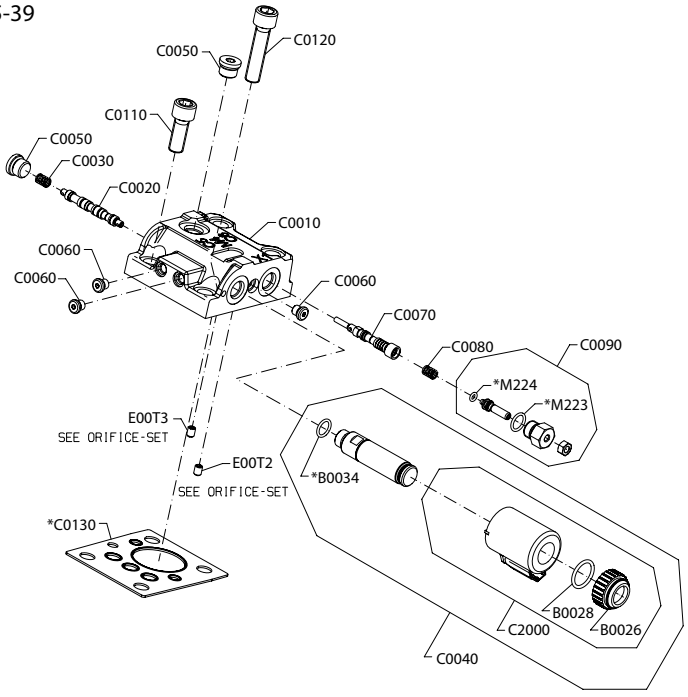

* Included in overhaul seal kit Q210

Order code: G1 and G2 common parts

Item	Date Begin	Date End	Part Number	Part Name	Qty. per Model/Kit
B0024	16-07	25-39	11031608	O-ring	1
B0028	25-40		11327430	O-ring	1
B0028	16-07	25-39	063172	O-ring (*SB-2025-006* on page 118)	1
B0034	25-40		11327445	O-ring	1
B0034	16-07	25-39	085043 (9004201-3700)	O-ring (*SB-2025-006* on page 118)	1
C0010	16-07		11173253	Control housing, 2-position	1
C0020	16-07		11016229	Spool	1
C0030	16-07		11160236	Spring	1
C0050	16-07		140644	Plug assembly (SAE)	2
C0060	16-07		11040532	Plug assembly	3
C0070	16-07		11016228	Spool	1
C0080	16-07		11160236	Spring	1
C0090	16-07		509360	Adjuster	1
C0110	16-07		737866 (9007314-1207)	Screw, M12 x 30	2
C0120	16-07		283325 (9007314-1211)	Screw, M12 x 50	2
C0130	16-07		11016168	Control seal	1
M223	16-07		085043 (9004201-3700)	O-ring	1
M224	16-07		732479	O-ring	1

Order code: G1

C0040	25-40		11321060	Solenoid valve, 12 volt	1
C0040	16-07	25-39	11013615	Solenoid valve, 12 volt (*SB-2025-006* on page 118)	1
C2000	25-40		11327405	Coil kit, 12 volt	1
C2000	16-07	25-39	11031763	Coil kit, 12 volt (*SB-2025-006* on page 118)	1
B0026	25-40		11324082	Coil nut	1
B0026	16-07	25-39	11027046	Coil nut (*SB-2025-006* on page 118)	1

Order code: G2

C0040	25-40		11321061	Solenoid valve, 24 volt	1
C0040	16-07	25-39	11013616	Solenoid valve, 24 volt (*SB-2025-006* on page 118)	1
C2000	25-40		11327443	Coil kit, 24 volt	1
C2000	16-07	25-39	11031764	Coil kit, 24 volt (*SB-2025-006* on page 118)	1
B0026	25-40		11324057	Coil nut	1
B0026	16-07	25-39	11027046	Coil nut (*SB-2025-006* on page 118)	1

© Danfoss A/S, 2026

H1B servo pressure HA-HD

HA configuration

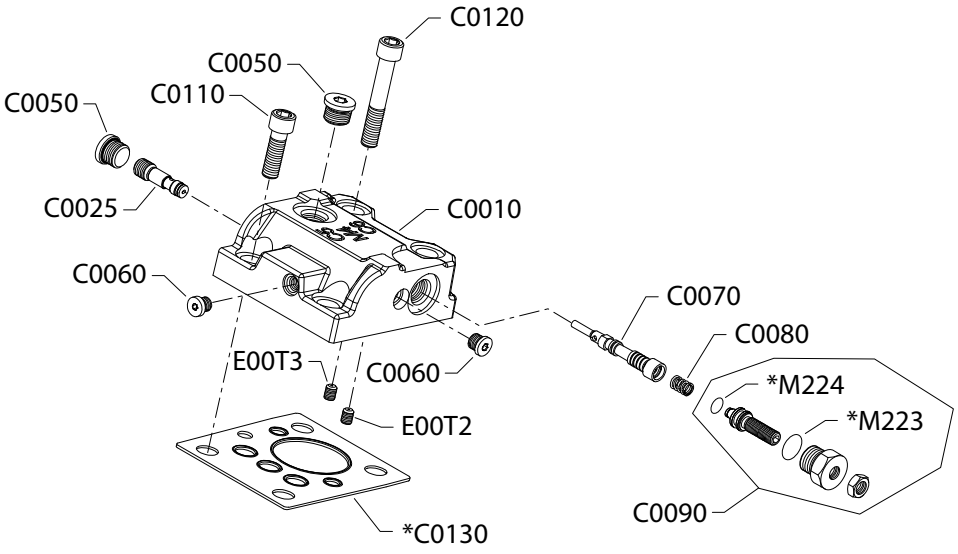

HB and HD configuration

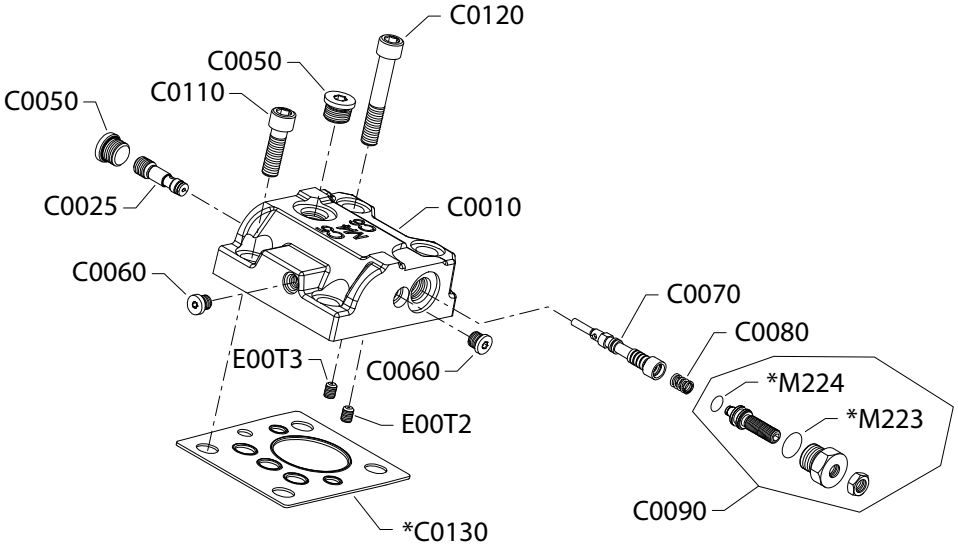

* Included in overhaul seal kit Q210

Order code: Common parts

Item	Date Begin	Date End	Part Number	Part Name	Qty. per Model/Kit
C0070	15-37		11016228	Spool	1
C0080	15-37		11160236	Spring	1
C0090	15-37		509360	Adjuster	1
C0110	15-37		737866 (9007314-1207)	Screw, M12 x 30	2
C0120	15-37		283325 (9007314-1211)	Screw, M12 x 50	2
C0130	15-37		11016168	Control seal	1
M223	15-37		085043 (9004201-3700)	O-ring	1
M224	15-37		732479	O-ring	1

Order code: HA

C0010	15-37		11162117	Control housing, 2-position	1
C0025	15-37		11337782	Shuttle valve assembly	1
C0050	15-37		140644	Plug assembly	2
C0060	15-37		11040532	Plug assembly	2

Order code: HB

C0010	15-37		11162118	Control housing, 2-position	1
C0020	15-37		11162120	Spool	1
C0050	15-37		140644	Plug assembly	1
C0060	15-37		11040532	Plug assembly	3

Order code: HD

C0010	20-48		11272360	Control housing, 2-position	1
C0020	20-48		11162120	Spool	1
C0050	20-48		140644	Plug assembly	1
C0060	20-48		11040532	Plug assembly	3
C1400	20-48		11151817	Limiter plug	2

© Danfoss A/S, 2026

H1B servo pressure HE, HF

HE and HF configuration

(HE)

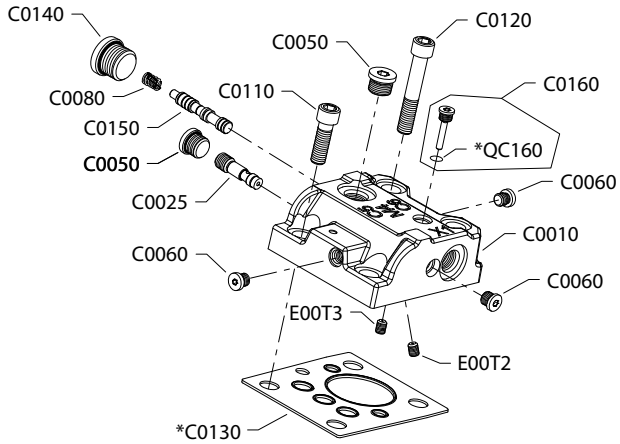

(HF)

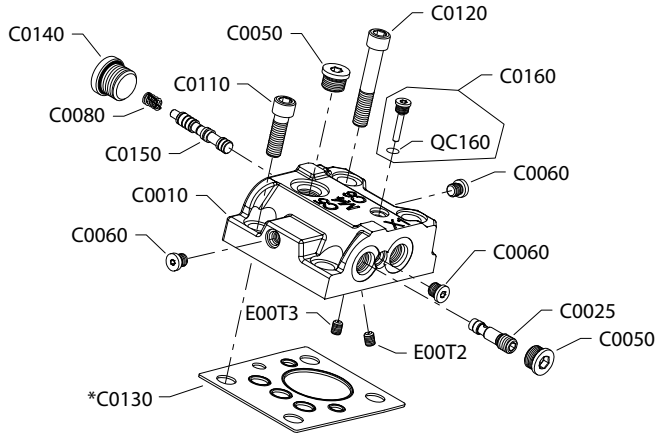

Note

Option HE is available in SAE and metric. Please order accordingly.

* Included in overhaul seal kit Q210

Order code: HE and HF common parts

Item	Date Begin	Date End	Part Number	Part Name	Qty. per Model/Kit
C0025	11-18		11337782	Shuttle valve assembly	1
C0060	11-18		11040532	Plug assembly	3
C0110	11-18		737866 (9007314-1207)	Screw, M12 x 30	2
C0120	11-18		283325 (9007314-1211)	Screw, M12 x 50	2
C0130	11-18		11016168	Control seal	1
C0150	11-18		11068172	Spool	1
C0160	11-18		511244	Plug assembly	1
QC160	11-18		039297 (9004201-1200)	O-ring	1

Order code: HE

C0010	11-18		11086117	Control housing, 2-position (SAE)	1
C0010	11-18		11175039	Control housing, 2-position (metric)	1
C0050	11-18		140644	Plug assembly (SAE)	2
C0050	11-18		11178808	Plug assembly (metric)	2
C0080	11-18		11160236	Spring (SAE)	1
C0080	11-18		11160236	Spring (metric)	1
C0140	11-18		9005110-8700 (315325)	Plug assembly (SAE)	1
C0140	11-18		9005110-8700 (315325)	Plug assembly (metric)	1

Order code: HF

C0010	11-18		11086118	Control housing, 2-position (SAE)	1
C0050	11-18		140644	Plug assembly (SAE)	2
C0080	11-18		11160236	Spring (SAE)	1
C0140	11-18		9005110-8700 (315325)	Plug assembly (SAE)	1

© Danfoss A/S, 2026

H1B160/250 servo pressure K1, K2

K1 and K2 configuration

Design prior to 25-40

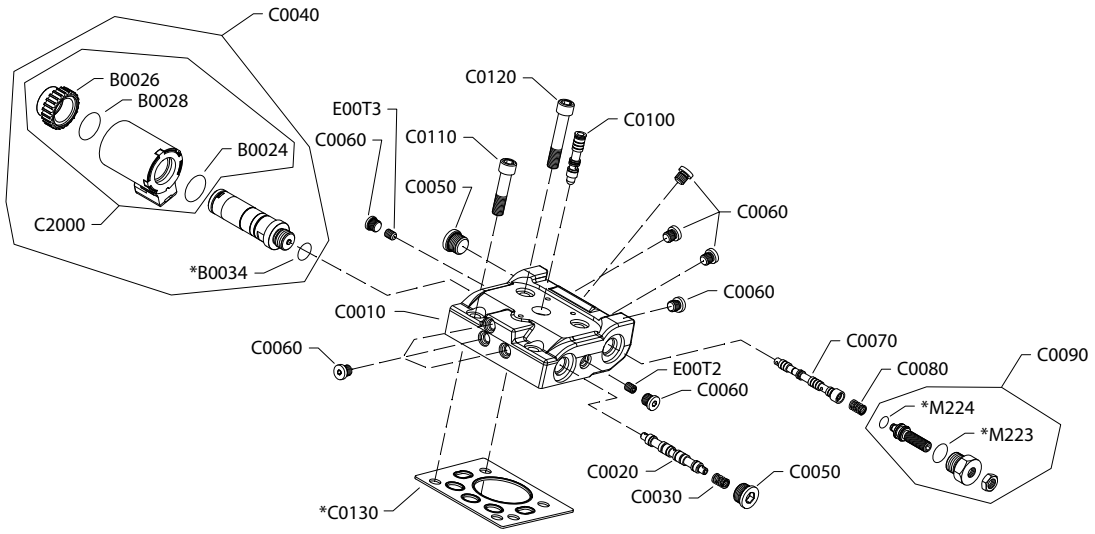

Design after 25-39

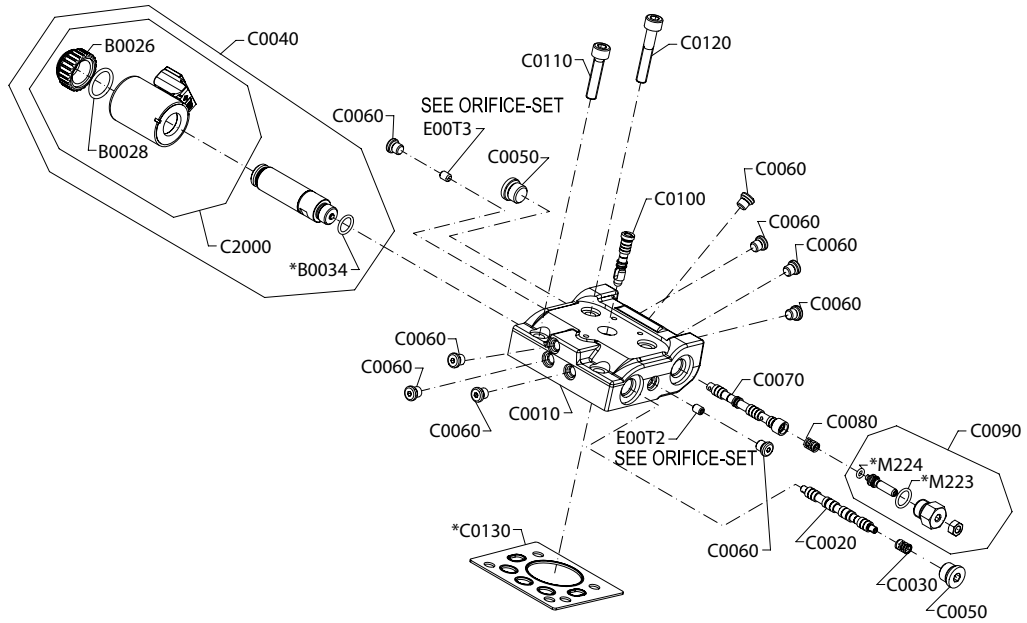

* Included in overhaul seal kit Q210

Order code: K1 and K2 common parts

Item	Date Begin	Date End	Part Number	Part Name	Qty. per Model/Kit
B0024	11-08	25-39	11031608	O-ring	1
B0028	25-40		11327430	O-ring	1
B0028	11-08	25-39	063172	O-ring (*SB-2025-006* on page 118)	1
B0034	25-40		11327445	O-ring	1
B0034	11-08	25-39	085043 (9004201-3700)	O-ring (*SB-2025-006* on page 118)	1
C0010	11-08		11026748	Control housing, proportional, PCOR	1
C0020	11-08		11026792	Spool	1
C0030	11-08		11160236	Spring	1
C0050	11-08		140644	Plug assembly (SAE)	2
C0060	11-08		11040532	Plug assembly	9
C0070	11-08		11026751	Spool	1
C0080	11-08		11160236	Spring	1
C0090	11-08		509360	Adjuster	1
C0100	11-08		11146871	Spool	1
C0110	11-08		710855	Screw, M8 x 35	2
C0120	11-08		746644 (9007314-0810)	Screw, M8 x 45	2
C0130	11-08		149040	Control seal	1
M223	11-08		085043 (9004201-3700)	O-ring	1
M224	11-08		732479	O-ring	1

Order code: K1

C0040	25-40		11321060	Solenoid, on/off, 12 volt	1
C0040	11-08	25-39	11013615	Solenoid, on/off, 12 volt (*SB-2025-006* on page 118)	1
C2000	25-40		11327405	Coil kit, 12 volt	1
C2000	11-08	25-39	11031763	Coil kit, 12 volt (*SB-2025-006* on page 118)	1
B0026	25-40		11324082	Coil nut	1
B0026	11-08	25-39	11027046	Coil nut (*SB-2025-006* on page 118)	1

Order code: K2

C0040	25-40		11321061	Solenoid, on/off, 24 volt	1
C0040	11-08	25-39	11013616	Solenoid, on/off, 24 volt (*SB-2025-006* on page 118)	1
C2000	25-40		11327443	Coil kit, 24 volt	1
C2000	11-08	25-39	11031764	Coil kit, 24 volt (*SB-2025-006* on page 118)	1
B0026	25-40		11324057	Coil nut	1
B0026	11-08	25-39	11027046	Coil nut (*SB-2025-006* on page 118)	1

© Danfoss A/S, 2026

H1B servo pressure KA, KH

KA configuration

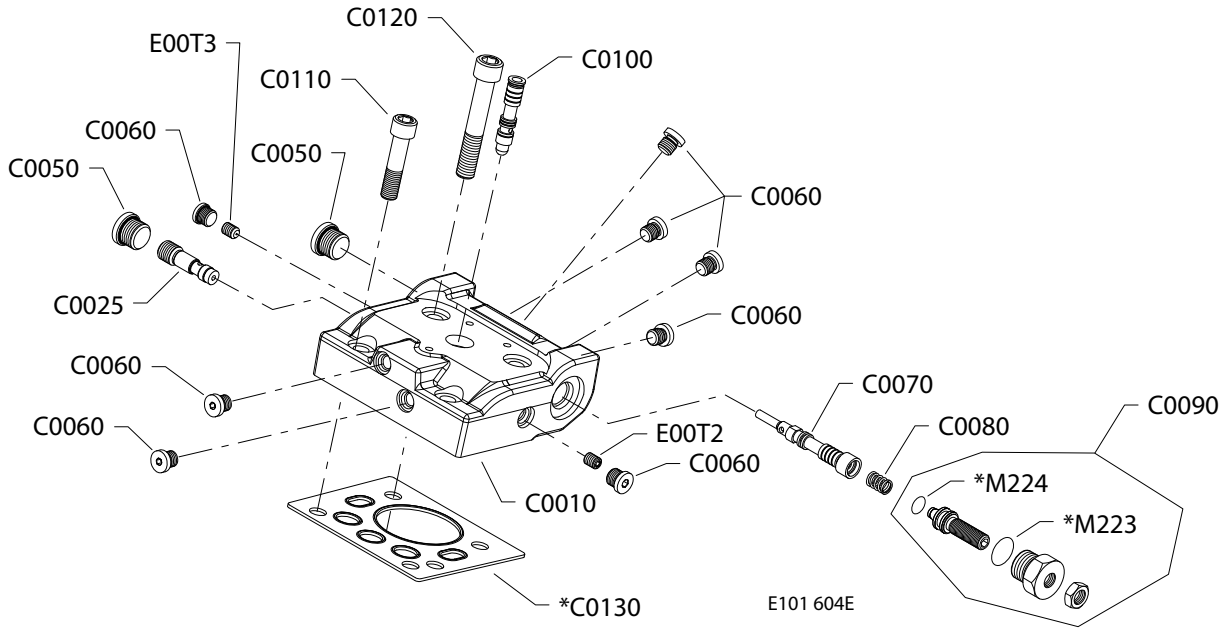

KH configuration

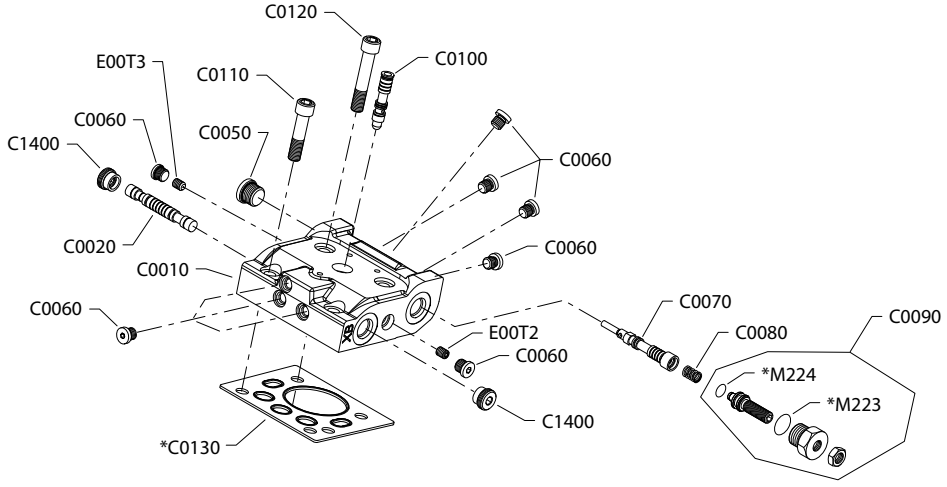

* Included in overhaul seal kit Q210

Order code: KA

Item	Date Begin		Part Number	Part Name	Qty. per Model/Kit
C0010	11-18		11026749	Control housing, proportional, PCOR	1
C0025	11-18		11337782	Shuttle valve assembly	1
C0050	11-18		140644	Plug assembly (SAE)	1
C0060	11-18		11040532	Plug assembly	8
C0070	11-18		11026751	Spool	1
C0080	11-18		11160236	Spring	1
C0090	11-18		509360	Adjuster	1
C100	11-18		11146871	Spool	1
C0110	11-18		710855	Screw, M8 x 35	2
C0120	11-18		746644 (9007314-0810)	Screw, M8 x 45	2
C0130	11-18		149040	Control seal	1
M223	11-18		085043 (9004201-3700)	O-ring	1
M224	11-18		732479	O-ring	1

Order code: KH

C0010	15-48		11161283	Control housing, proportional, PCOR	1
C0020	15-48		11151818	Spool	1
C0050	15-48		140644	Plug assembly	1
C0060	15-48		11040532	Plug assembly	9
C0070	15-48		11026751	Spool	1
C0080	15-48		11160236	Spring	1
C0090	15-48		509360	Adjuster	1
C100	15-48		11146871	Spool	1
C0110	15-48		710855	Screw, M8 x 35	2
C0120	15-48		746644 (9007314-0810)	Screw, M8 x 45	2
C0130	15-48		149040	Control seal	1
C1400	15-48		11151817	Limiter plug	2
M223	15-48		085043 (9004201-3700)	O-ring	1
M224	15-48		732479	O-ring	1

© Danfoss A/S, 2026

H1B servo pressure M1, M2

M1 and M2 configuration

Design prior to 26-14

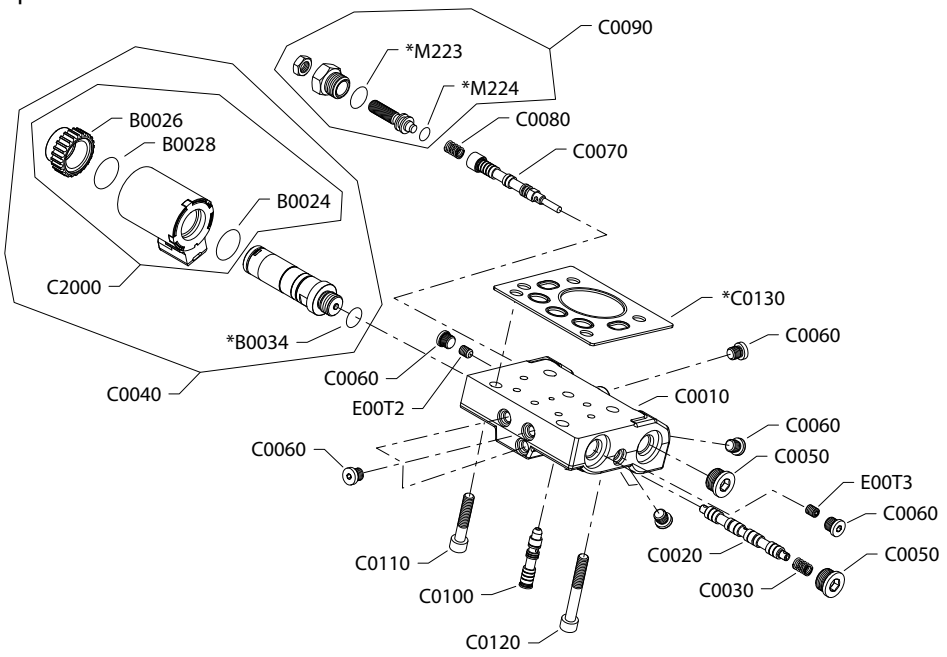

Design after 26-13

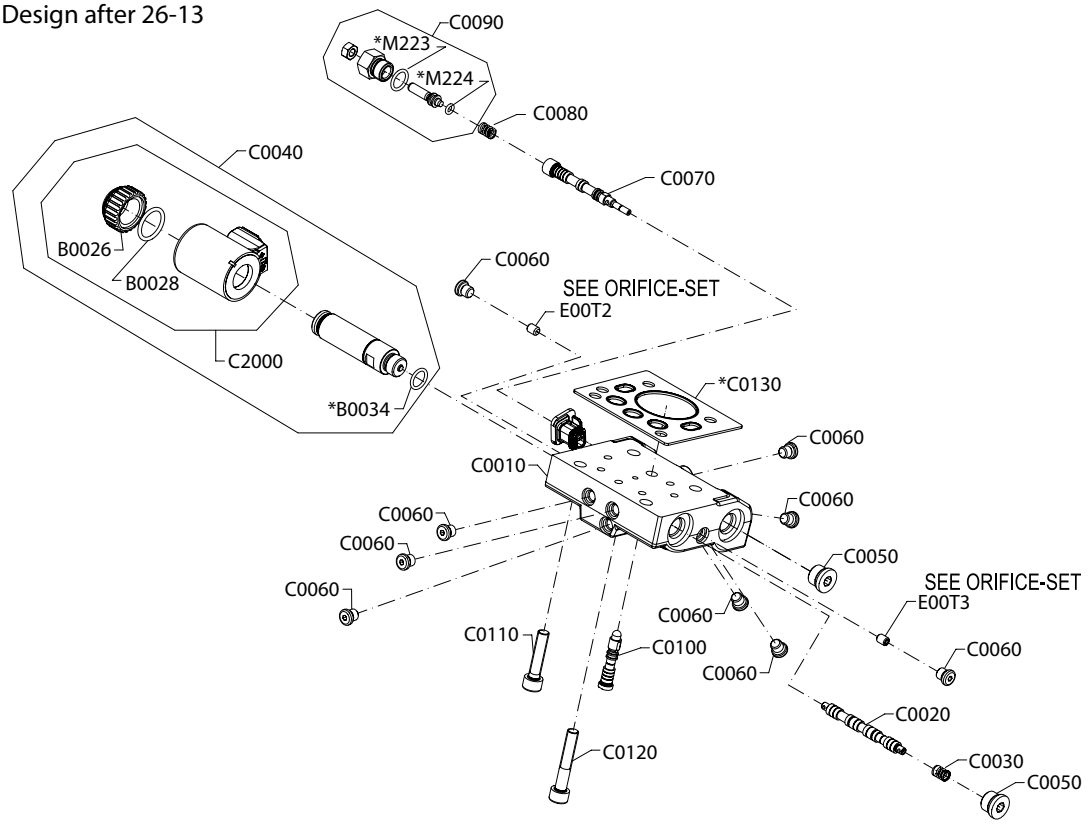

* Included in overhaul seal kit Q210

Order code: M1 and M2 common parts

Item	Date Begin	Date End	Part Number	Part Name	Qty. per Model/Kit
B0024	08-14	26-13	11031608	O-ring	1
B0028	26-14		11327430	O-ring	1
B0028	08-14	26-13	063172	O-ring (*SB-2025-006* on page 118)	1
B0034	26-14		11327445	O-ring	1
B0034	08-14	26-13	085043 (9004201-3700)	O-ring (*SB-2025-006* on page 118)	1
C0010	08-14		11028958	Control housing, proportional, PCOR	1
C0020	08-14		11026792	Spool	1
C0030	08-14		11160236	Spring	1
C0050	08-14		140644	Plug assembly (SAE)	2
C0060	08-14		11040532	Plug assembly	9
C0070	08-14		11028957	Spool	1
C0080	08-14		11160236	Spring	1
C0090	08-14		509360	Adjuster	1
C0100	08-14		11146871	Spool	1
C0110	08-14		710855	Screw, M8 x 35	2
C0120	08-14		746644 (9007314-0810)	Screw, M8 x 45	2
C0130	08-14		149040	Control seal	1
M223	08-14		085043 (9004201-3700)	O-ring	1
M224	08-14		732479	O-ring	1

Order code: M1

C0040	26-14		11321060	Solenoid, on/off, 12 volt	1
C0040	08-14	26-13	11013615	Solenoid, on/off, 12 volt (*SB-2025-006* on page 118)	1
C2000	26-14		11327405	Coil kit, 12 volt	1
C2000	08-14	26-13	11031763	Coil kit, 12 volt (*SB-2025-006* on page 118)	1
B0026	26-14		11324082	Coil nut	1
B0026	08-14	26-13	11027046	Coil nut (*SB-2025-006* on page 118)	1

Order code: M2

C0040	26-14		11321061	Solenoid, on/off, 24 volt	1
C0040	08-14	26-13	11013616	Solenoid, on/off, 24 volt (*SB-2025-006* on page 118)	1
C2000	26-14		11327443	Coil kit, 24 volt	1
C2000	08-14	26-13	11031764	Coil kit, 24 volt (*SB-2025-006* on page 118)	1
B0026	26-14		11324057	Coil nut	1
B0026	08-14	26-13	11027046	Coil nut (*SB-2025-006* on page 118)	1

© Danfoss A/S, 2026

H1B servo pressure MA

MA configuration

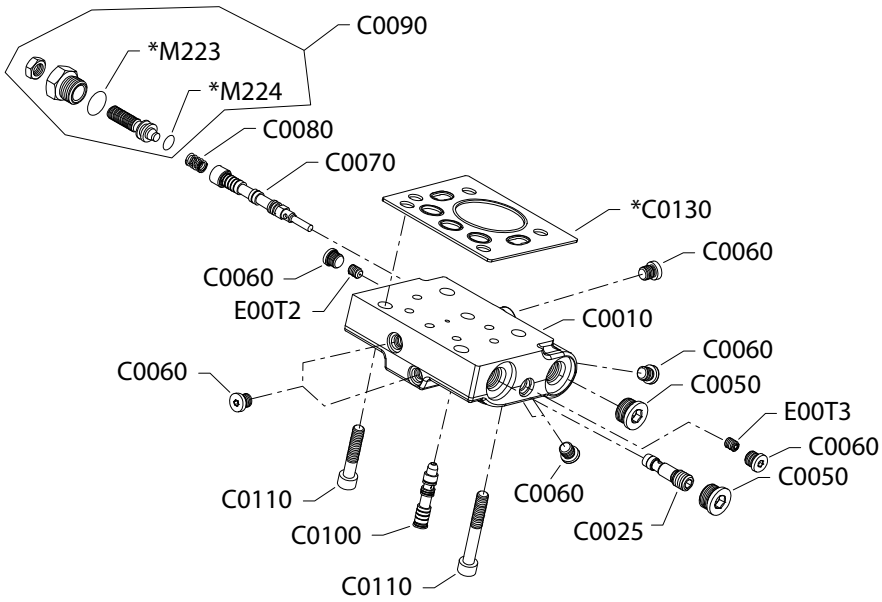

Note

Option MA is available in SAE and metric. Please order accordingly

* Included in overhaul seal kit Q210

Order code: MA

Item	Date Begin	Date End	Part Number	Part Name	Qty. per Model/Kit
C0010	11-18		11028959	Control housing, proportional, PCOR (SAE)	1
C0010	18-28		11202800	Control housing, proportional, PCOR (metric)	1
C0025	11-18		11337782	Shuttle valve assembly	1
C0050	11-18		140644	Plug assembly (SAE)	2
C0050	18-28		11178808	Plug assembly (metric)	2
C0060	11-18		11040532	Plug assembly	8
C0070	11-18		11028957	Spool	1
C0080	11-18		11160236	Spring	1
C0090	11-18		509360	Adjuster	1
C0100	11-18		11146871	Spool	1
C0110	11-18		710855	Screw, M8 x 35	2
C0120	11-18		746644 (9007314-0810)	Screw, M8 x 45	2
C0130	11-18		149040	Control seal	1
M223	11-18		085043 (9004201-3700)	O-ring	1
M224	11-18		732479	O-ring	1

© Danfoss A/S, 2026

H1B servo pressure MH

MH configuration

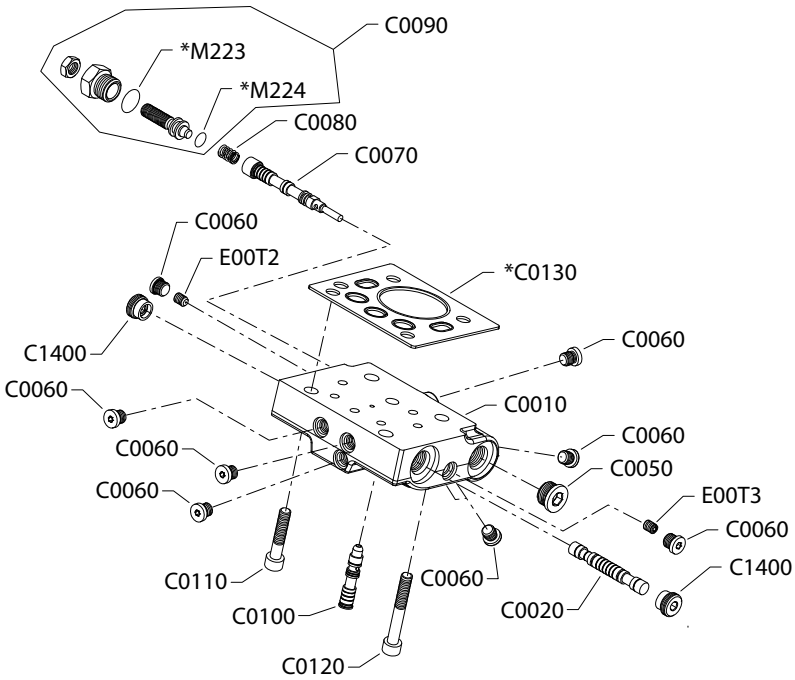

* Included in overhaul seal kit Q210

Order code: MH

Item	Date Begin	Date End	Part Number	Part Name	Qty. per Model/Kit
C0010	14-37		11151816	Control housing, proportional, PCOR	1
C0020	14-37		11151818	Spool	1
C0050	14-37		140644	Plug assembly	1
C0060	14-37		11040532	Plug assembly	9
C0070	14-37		11028957	Spool	1
C0080	14-37		11160236	Spring	1
C0090	14-37		509360	Adjuster	1
C0100	14-37		11146871	Spool	1
C0110	14-37		710855	Screw, M8 x 35	2
C0120	14-37		746644 (9007314-0810)	Screw, M8 x 45	2
C0130	14-37		149040	Control seal	1
C1400	14-37		11151817	Limiter plug	2
M223	14-37		085043 (9004201-3700)	O-ring	1
M224	14-37		732479	O-ring	1

© Danfoss A/S, 2026

H1B servo pressure NP, NR, NT

NP configuration

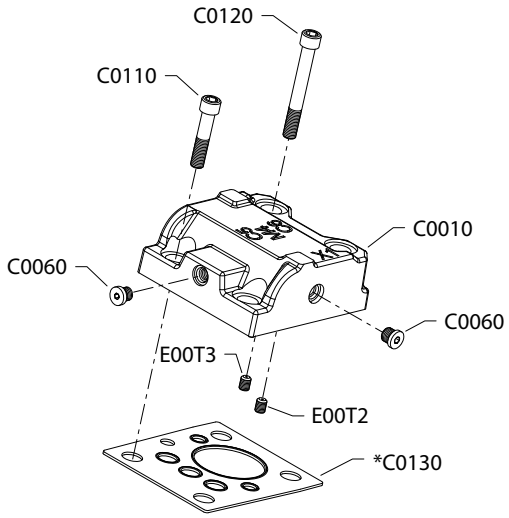

NR configuration

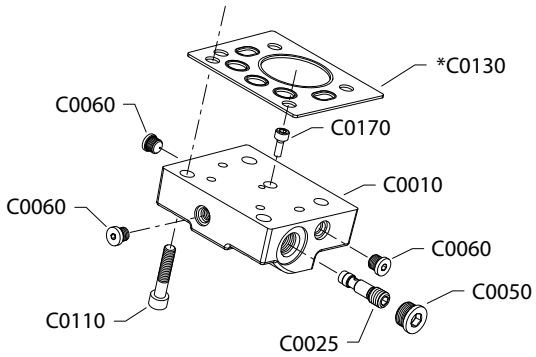

NT configuration

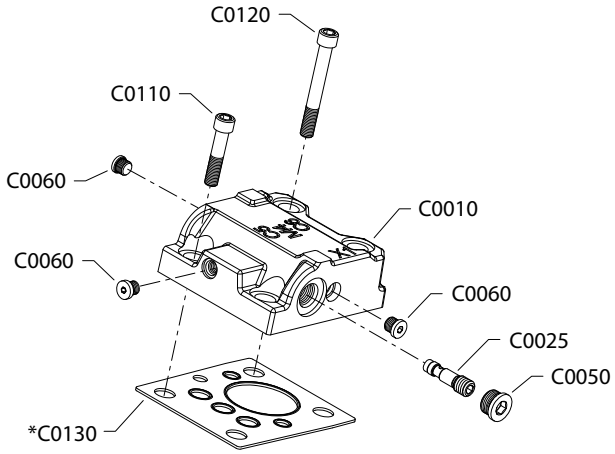

* Included in overhaul seal kit Q210

Order code: NP

Item	Date Begin	Date End	Part Number	Part Name	Qty. per Model/Kit
C0010	11-18		11086116	Control housing, 2-position	1
C0050	11-18		140644	Plug assembly	1
C0060	11-18		11040532	Plug assembly	2
C0110	11-18		737866 (9007314-1207)	Screw, M12 x 30	2
C0120	11-18		283325 (9007314-1211)	Screw, M12 x 50	2
C0130	11-18		11016168	Control seal	1

Order code: NR

C0010	12-42		11123843	Control housing, proportional	1
C0025	12-42		11337782	Shuttle valve	1
C0050	12-42		140644	Plug assembly	1
C0060	12-42		11040532	Plug assembly	3
C0110	12-42		710855	Screw, M8 x 35	2
C0130	12-42		149040	Control seal	1
C0170	12-42		716860	Screw, M5 x 12	1

Order code: NT

C0010	12-42		11123847	Control housing, 2-position	1
C0025	12-42		11337782	Shuttle valve	1
C0050	12-42		140644	Plug assembly	1
C0060	12-42		11040532	Plug assembly	3
C0110	12-42		737866 (9007314-1207)	Screw, M12 x 30	2
C0120	12-42		283325 (9007314-1211)	Screw, M12 x 50	2
C0130	12-42		11016168	Control seal	1

© Danfoss A/S, 2026

H1B servo pressure V1

V1 configuration

Design prior to 25-40

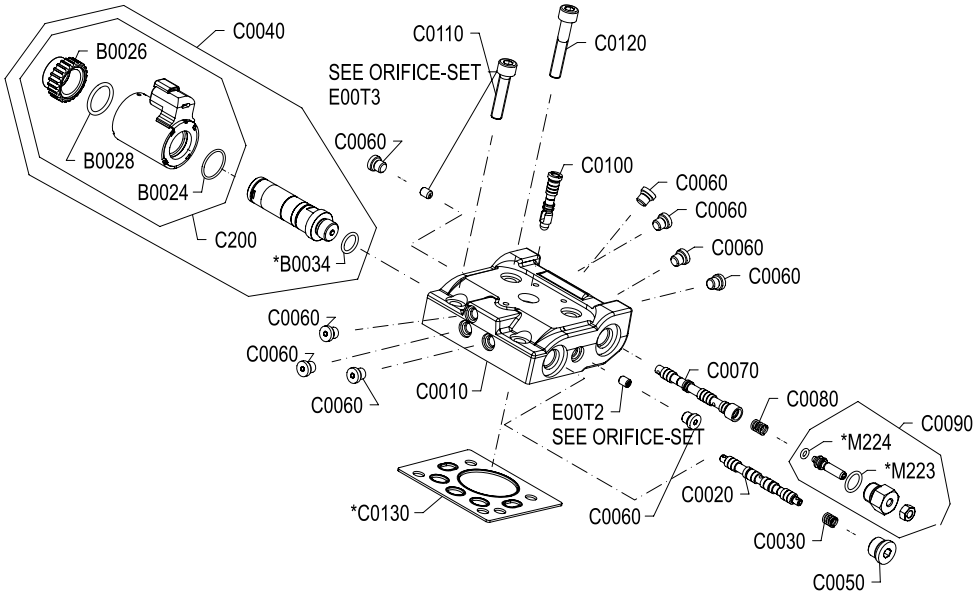

Design after 25-39

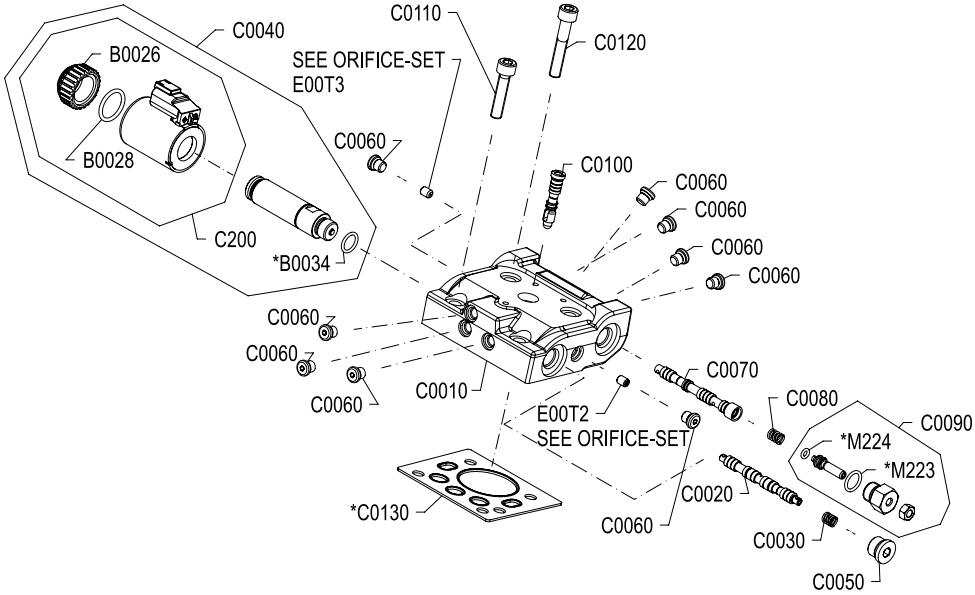

* Included in overhaul seal kit Q210

Order code: V1

Item	Date Begin	Date End	Part Number	Part Name	Qty. per Model/Kit
B0024	24-12	25-39	11031608	O-ring	1
B0026	25-40		11324082	Coil nut, black	1
B0026	24-12	25-39	11027046	Coil nut (*SB-2025-006* on page 118)	1
B0028	25-40		11327430	O-ring	1
B0028	24-12	25-39	063172	O-ring (*SB-2025-006* on page 118)	1
B0034	25-40		11327445	O-ring	1
B0034	24-12	25-39	085043 (9004201-3700)	O-ring (*SB-2025-006* on page 118)	1
C0010	24-12		11187132	Control housing, proportional, PCOR	1
C0020	24-12		11026792	Spool	1
C0030	24-12		11160236	Spring	1
C0040	25-40		11321060	Solenoid, on/off, 12 volt	1
C0040	24-12	25-39	11013615	Solenoid, on/off, 12 volt (*SB-2025-006* on page 118)	1
C0050	24-12		140644	Plug assembly (SAE)	1
C0060	24-12		11040532	Plug assembly	9
C0070	24-12		11026751	Spool	1
C0080	24-12		11160236	Spring	1
C0090	24-12		509360	Adjuster	1
C0100	24-12		11146871	Spool	1
C0110	24-12		710855	Screw, M8 x 35	2
C0120	24-12		746644 (9007314-0810)	Screw, M8 x 45	2
C0130	24-12		149040	Control seal	1
C2000	25-40		11327405	Coil kit, 12 volt	1
C2000	24-12	25-39	11031763	Coil kit, 12 volt (*SB-2025-006* on page 118)	1
M223	24-12		085043 (9004201-3700)	O-ring	1
M224	24-12		732479	O-ring	1

H1B servo pressure WA

WA configuration

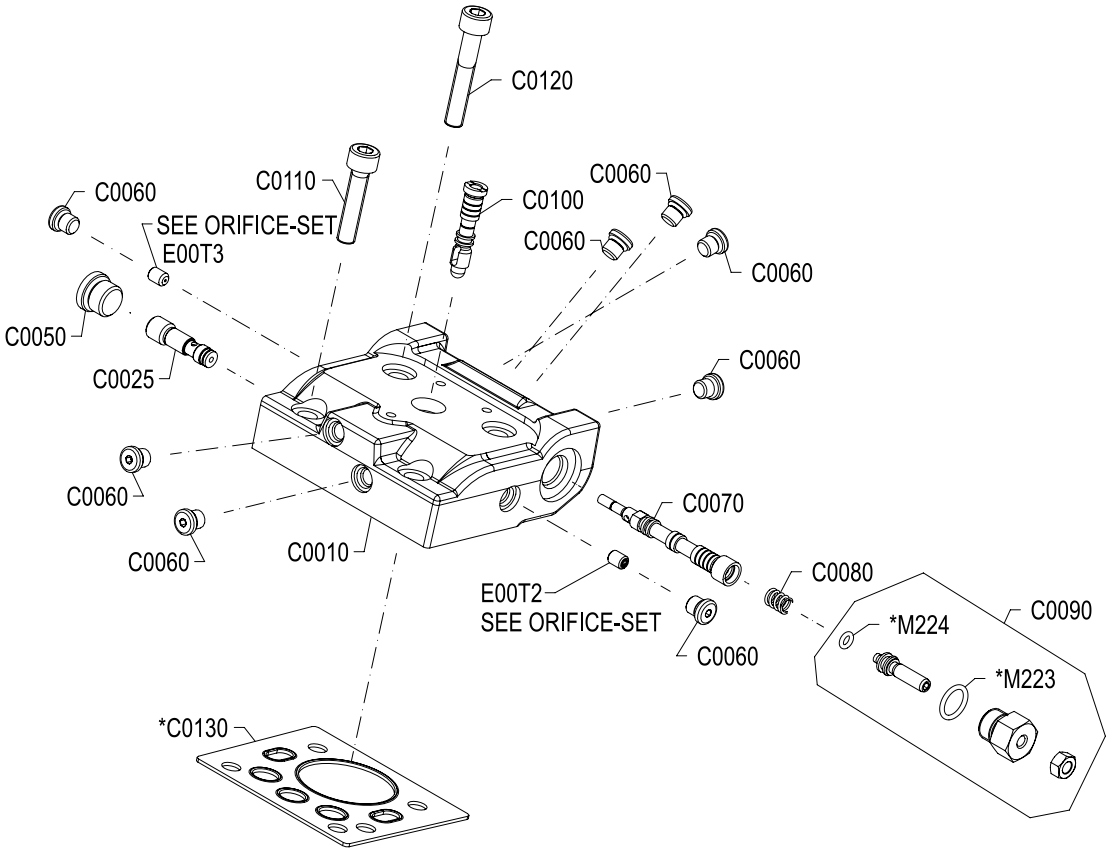

* Included in overhaul seal kit Q210

Order code: WA

Item	Date Begin	Date End	Part Number	Part Name	Qty. per Model/Kit
C0025	20-19		11337782	Spool	1
C0050	20-19		140644	Plug assembly (SAE)	1
C0060	20-19		11040532	Plug assembly	8
C0070	20-19		11028957	Spool	1
C0080	20-19		11160236	Spring	1
C0090	20-19		509360	Adjuster	1
C0100	20-19		11146871	Spool	1
C0110	20-19		710855	Screw, M8 x 35	2
C0120	20-19		746644 (9007314-0810)	Screw, M8 x 45	2
C0130	20-19		149040	Control seal	1
M223	20-19		085043 (9004201-3700)	O-ring	1
M224	20-19		732479	O-ring	1

© Danfoss A/S, 2026

Orifice

H1B orifice A, B, C, D

A-D orifice plugs

Note

See servo pressure supply drawing for orifice location.

Order code: A

Item	Date Begin	Date End	Part Number	Part Name	Qty. per Model/Kit
E00T2	11-18		516598	Orifice plug, 1.2 mm	1
E00T3	11-18		516598	Orifice plug, 1.2 mm	1

Order code: B

E00T2	11-18		578542	Orifice plug, 0.8 mm	1
E00T3	11-18		578542	Orifice plug, 0.8 mm	1

Order code: C

E00T2	11-18		511825	Orifice plug, 0.6 mm	1
E00T3	11-18		511825	Orifice plug, 0.6 mm	1

Order code: D

E00T2	11-18		679316	Orifice plug, 0.5 mm	1
E00T3	11-18		679316	Orifice plug, 0.5 mm	1

Order code: N

No parts

End cap

H1B 250cc end cap PA

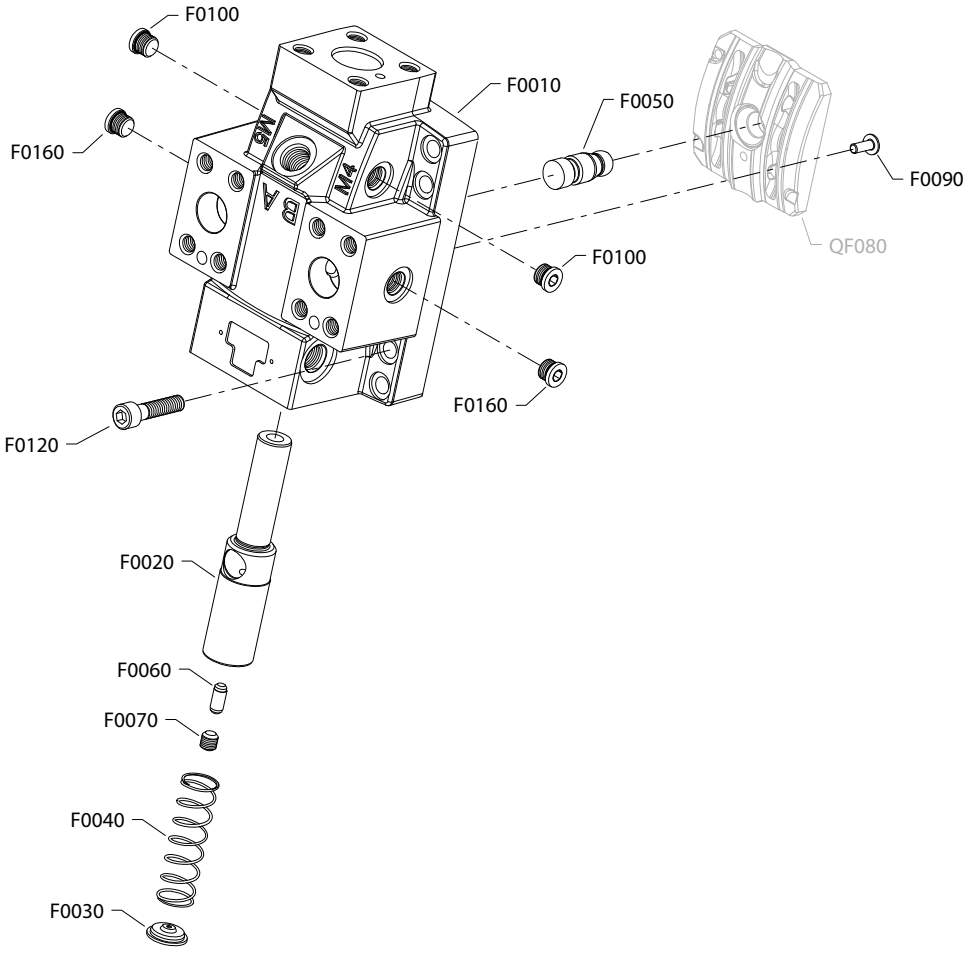

* Included in overhaul seal kit Q210

Note

This option is available in SAE and metric configurations. Please order accordingly.

Order code: PA

Item	Date Begin	Date End	Part Number	Part Name	Qty. per Model/Kit
F0010	13-23		11090018	End cap, axial ports (SAE)	1
F0010	13-23		11172638	End cap, axial ports (metric)	1
F0020	13-23		11093066	Servo piston	1
F0030	13-23		11090825	Spring guide	1
F0040	13-23		11160235	Spring	1
F0050	13-23		11093068	Setting lug	1
F0060	13-23		11008915	Setting lug pin	1
F0070	13-23		042465	Set screw, M10 x 10	1
F0090	13-23		11246801	Button head screw	1
F0100	13-23		140644	Plug assembly (SAE)	2
F0100	13-23		11178808	Plug assembly (metric)	2
F0120	13-23		703900	Screw, M16 x 70	8
F0160	13-23		140644	Plug assembly (SAE)	2
F0160	13-23		11178808	Plug assembly (metric)	2
QF080	13-23	18-16	11086155	Valve segment assembly (*SB-2018-028* on page 113)	1

H1B 250cc end cap PB

Parts configuration

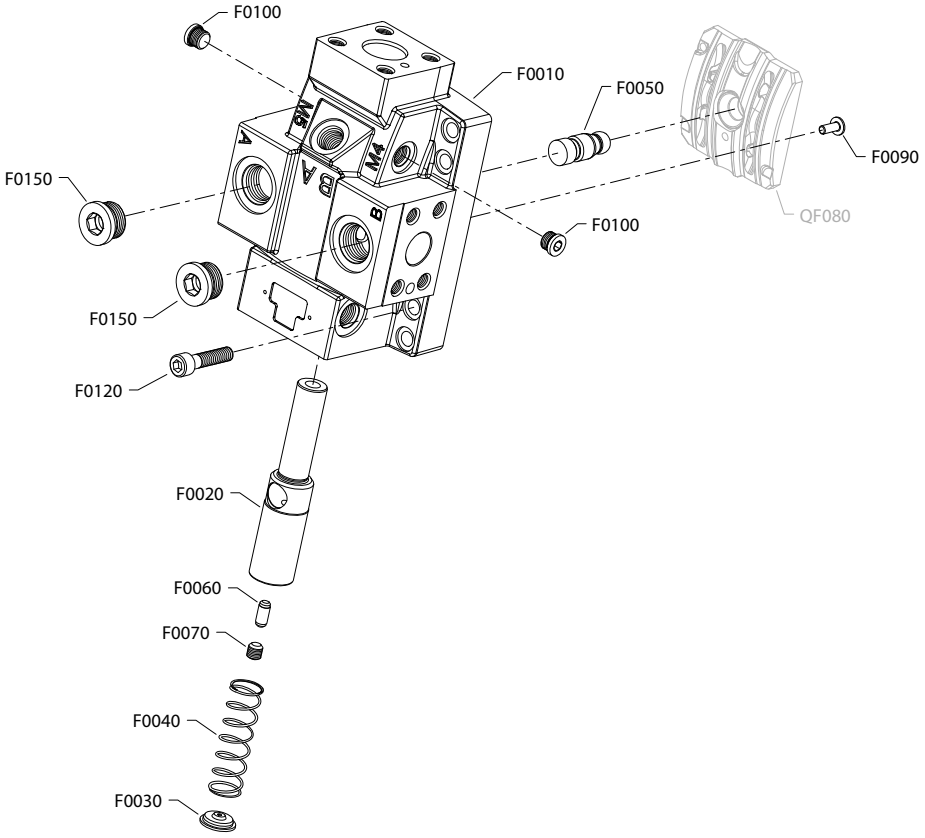

* Included in overhaul seal kit Q210

Note

Option PB is available in SAE and metric. Please order accordingly

Order code: PB

Item	Date Begin	Date End	Part Number	Part Name	Qty. per Model/Kit
F0010	13-23		11090017	End cap, side ports (SAE)	1
F0010	18-32		11216020	End cap, side ports (metric)	1
F0020	13-23		11093066	Servo piston assembly	1
F0030	13-23		11090825	Spring guide	1
F0040	13-23		11160235	Spring	1
F0050	13-23		11093068	Setting lug	1
F0060	13-23		11008915	Setting lug pin	1
F0070	13-23		042465	Screw	1
F0090	13-23	22-25	11014186	Button head screw	1
F0090	22-26		11246801	Button head screw	1
F0100	13-23		140644	Plug assembly (SAE)	2
F0100	18-32		11178808	Plug assembly (metric)	2
F0120	13-23		703900	Screw, M16 x 70	8
F0150	13-23		664524 (9005110-9000)	Plug assembly (SAE)	2
F0150	18-32		11178808	Plug assembly (metric)	2
QF080	13-23	18-16	11086155	Valve segment assembly (*SB-2018-028* on page 113)	1

H1B 250cc end cap PF

Parts configuration

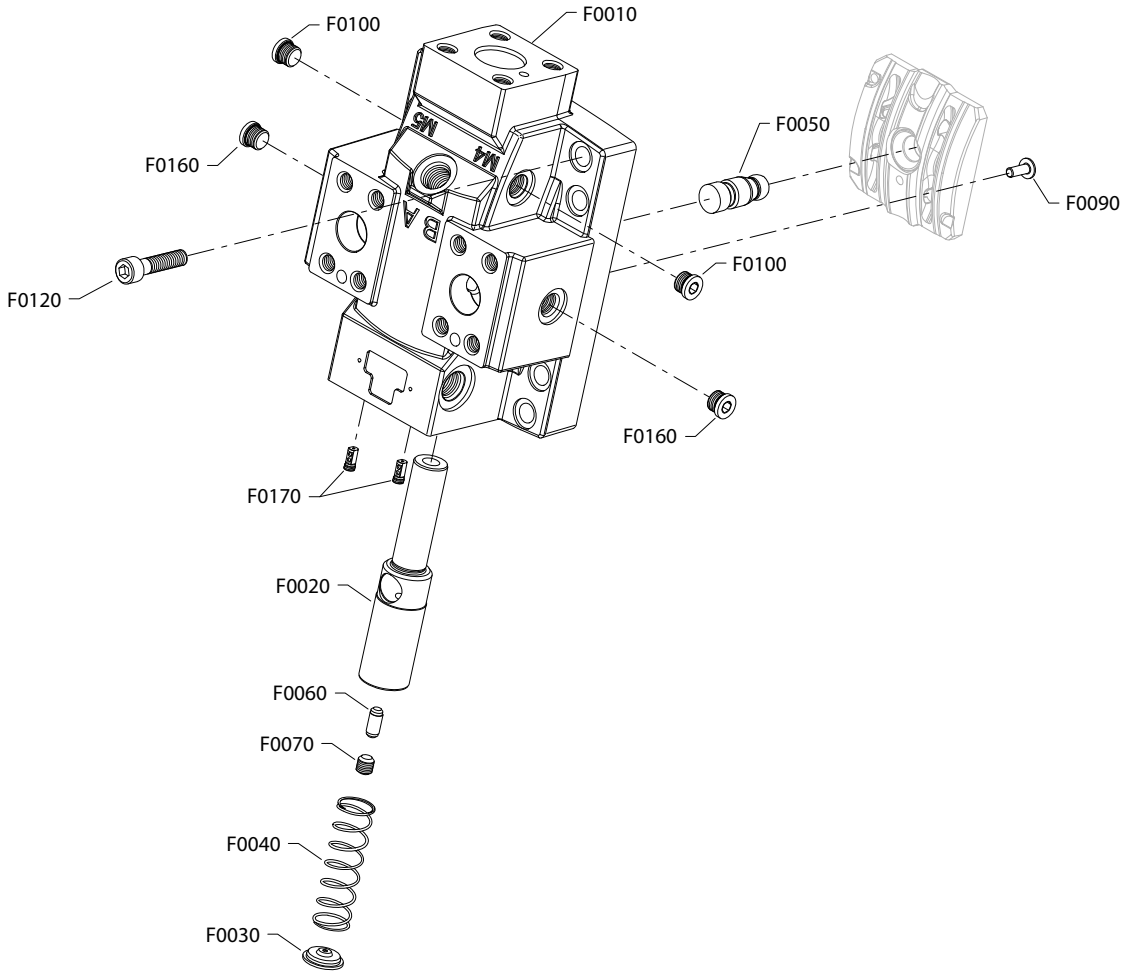

* Included in overhaul seal kit Q210

Note

This option is available in SAE and metric configurations. Please order accordingly.

Order code: PF

Item	Date Begin	Date End	Part Number	Part Name	Qty. per Model/Kit
F0010	13-23		11161881	End cap, axial ports (SAE)	1
F0010	13-23		11184331	End cap, axial ports (metric)	1
F0020	13-23		11093066	Servo piston	1
F0040	13-23		11160235	Spring (SAE)	1
F0040	13-23		11160235	Spring (metric)	1
F0050	13-23		11093068	Setting lug	1
F0090	13-23		11246801	Button head screw	1
F0100	13-23		140644	Plug assembly (SAE)	2
F0100	13-23		11178808	Plug assembly (metric)	2
F0120	13-23		703900	Screw, M16 x 70	8
F0160	13-23		140644	Plug assembly (SAE)	2
F0160	13-23		140644	Plug assembly (metric)	2
F0170	13-23		11124768	Edge filter	2
QF080	13-23	18-16	11086155	Valve segment assembly (*SB-2018-028* on page 113)	1

H1B 250cc end cap RA

Parts configuration

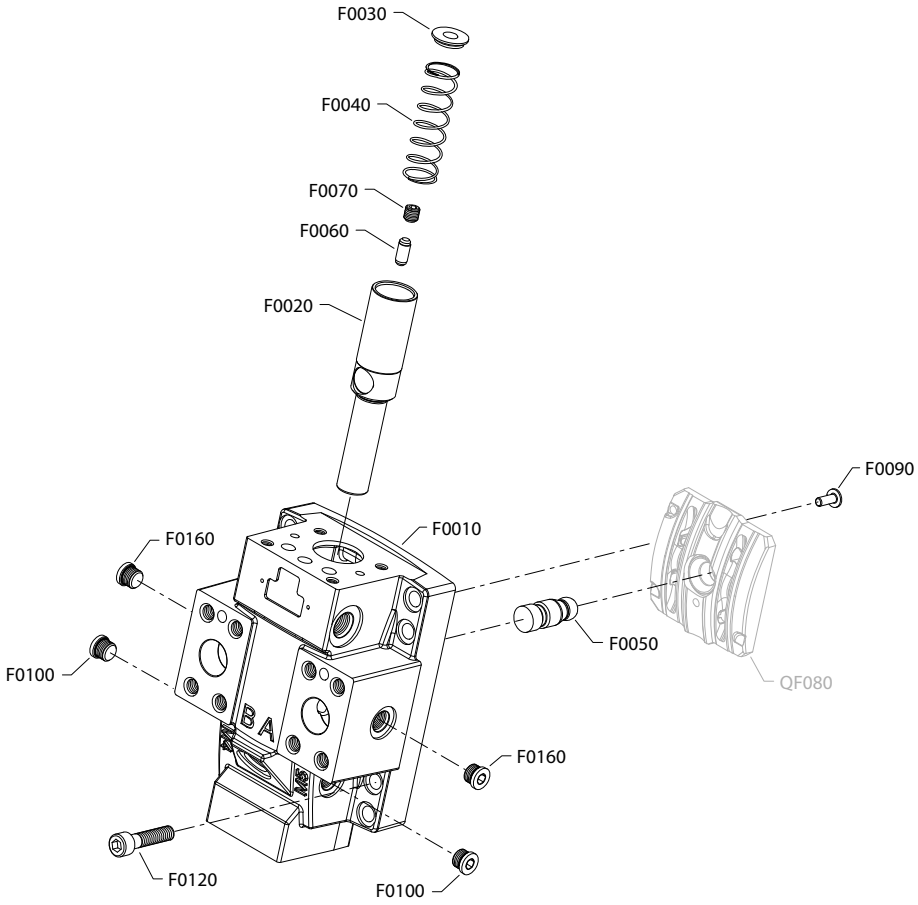

* Included in overhaul seal kit Q210

Note

This option is available in SAE and metric configurations. Please order accordingly.

Order code: RA

Item	Date Begin	Date End	Part Number	Part Name	Qty. per Model/Kit
F0010	13-23		11090018	End cap, axial ports (SAE)	1
F0010	16-35		11172638	End cap, axial ports (metric)	1
F0020	13-23		11093066	Servo piston	1
F0040	16-35		11160235	Spring	1
F0050	13-23		11093068	Setting lug	1
F0090	13-23		11246801	Button head screw	1
F0100	13-23		140644	Plug assembly (SAE)	2
F0100	16-35		11178808	Plug assembly (metric)	2
F0120	13-23		703900	Screw, M16 x 70	8
F0160	13-23		140644	Plug assembly (SAE)	2
F0160	16-35		11178808	Plug assembly (metric)	2
QF080	13-23	18-16	11086155	Valve segment (*SB-2018-028* on page 113)	1

H1B 250cc end cap RB

Parts configuration

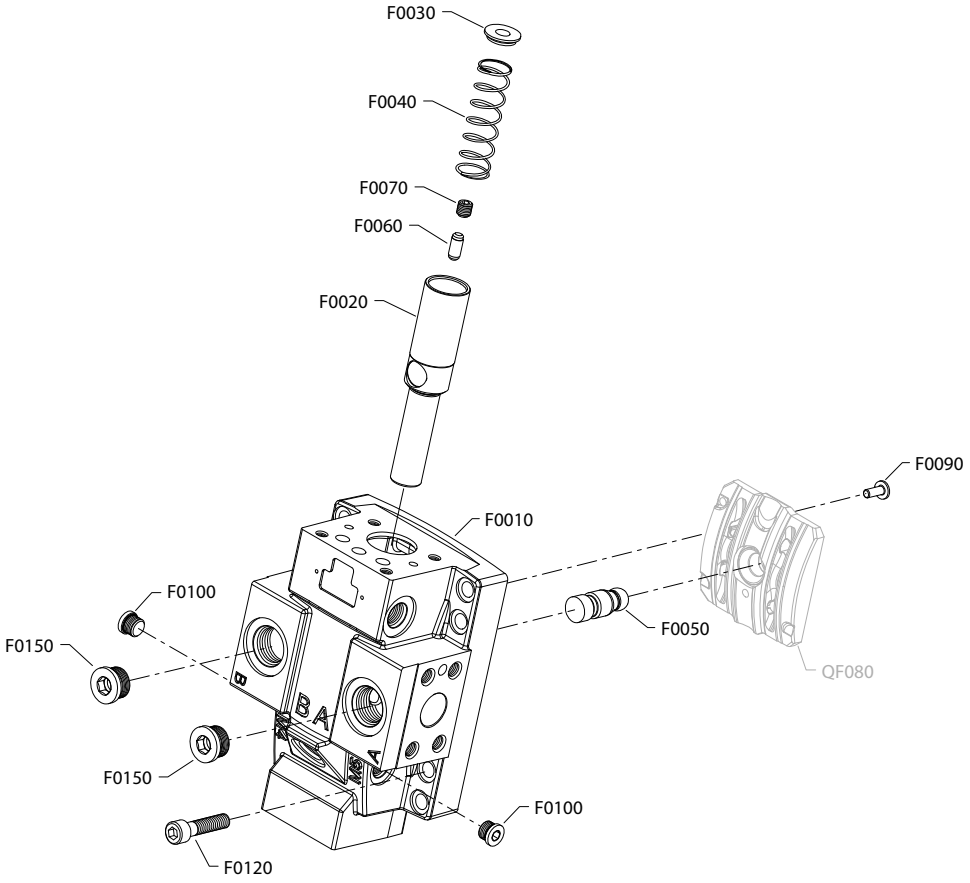

* Included in overhaul seal kit Q210

Order code: RB

Item	Date Begin	Date End	Part Number	Part Name	Qty. per Model/Kit
F0010	13-23		11090017	End cap, side ports	1
F0020	13-23		11093066	Servo piston	1
F0040	13-23		11160235	Spring	1
F0050	13-23		11093068	Setting lug	1
F0090	13-23		11246801	Button head screw	1
F0100	13-23		140644	Plug assembly	2
F0120	13-23		703900	Screw, M16 x 70	8
F0150	13-23		664524 (9005110-9000)	Plug assembly	2
QF080	13-23	18-16	11086155	Valve segment (*SB-2018-028* on page 113)	1

H1B 250cc end cap RE

Parts configuration

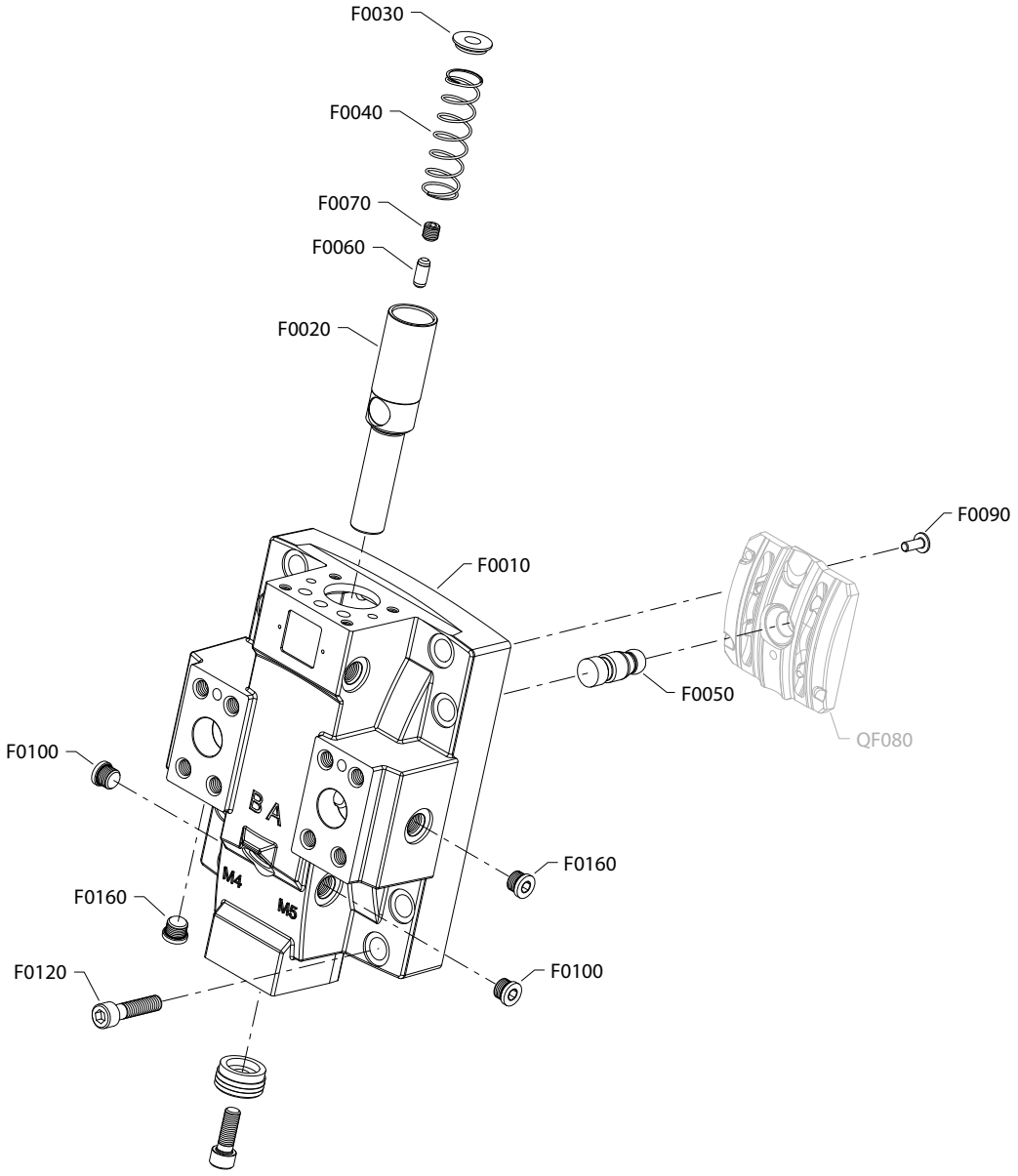

* Included in overhaul seal kit Q210

Order code: RE

Item	Date Begin	Date End	Part Number	Part Name	Qty. per Model/Kit
F0010	13-23		11106050	End cap, axial ports	1
F0020	13-23		11093066	Servo piston	1
F0040	13-23		11160235	Spring	1
F0050	13-23		11093068	Setting lug	1
F0090	13-23		11246801	Button head screw	1
F0100	13-23		140644	Plug assembly	2
F0120	13-23		703900	Screw, M16 x 70	8
F0160	13-23		140644	Plug assembly	2
QF080	13-23	18-16	11086155	Valve segment (*SB-2018-028* on page 113)	1

H1B 250cc end cap TA

Parts configuration

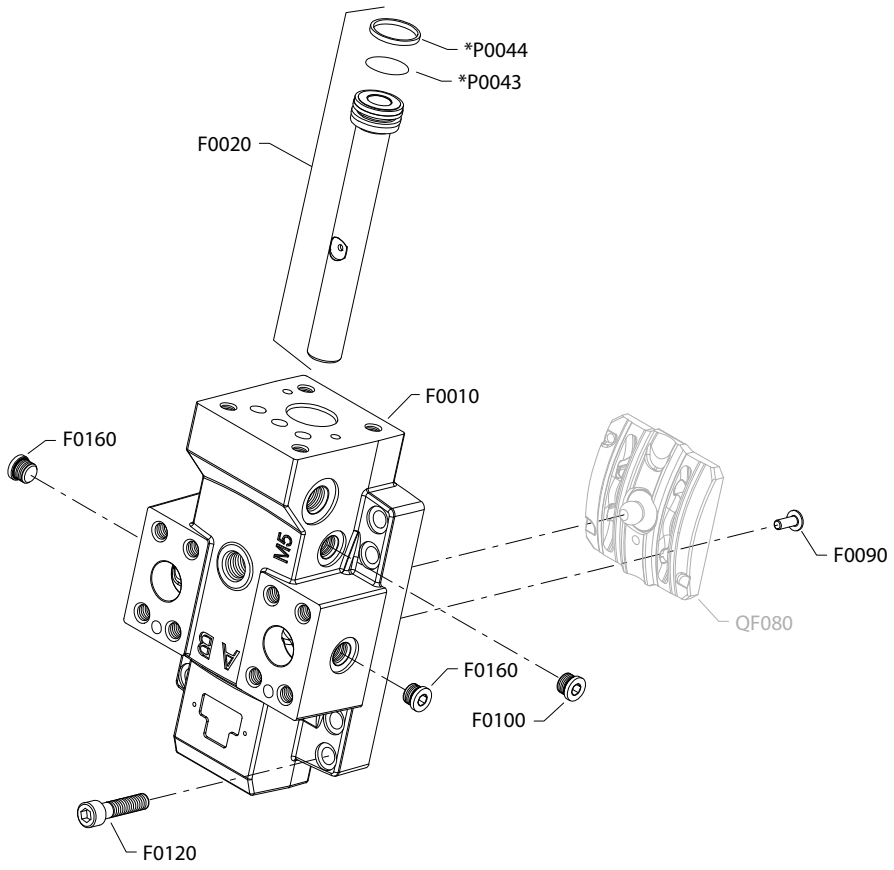

* Included in overhaul seal kit Q210

Note

This option is available in SAE and metric configurations. Please order accordingly.

Order code: TA

Item	Date Begin	Date End	Part Number	Part Name	Qty. per Model/Kit
F0010	13-23		11115846	End cap, axial ports (SAE)	1
F0010	16-06		11175038	End cap, axial ports (metric)	1
F0020	13-23		11140319	Servo piston assembly	1
F0090	13-23		11246801	Button head screw	1
F0100	13-23		140644	Plug assembly (SAE)	1
F0100	16-06		11178808	Plug assembly (metric)	1
F0120	13-23		703900	Screw, M16 x 70	8
F0160	13-23		140644	Plug assembly (SAE)	2
F0160	16-06		11178808	Plug assembly (metric)	2
P0043	13-23		11063016	O-ring	1
P0044	13-23		11063013	Piston ring	1
QF080	13-23	18-16	11086155	Valve segment assembly (*SB-2018-028* on page 113)	1

H1B 250cc end cap TB

Parts configuration

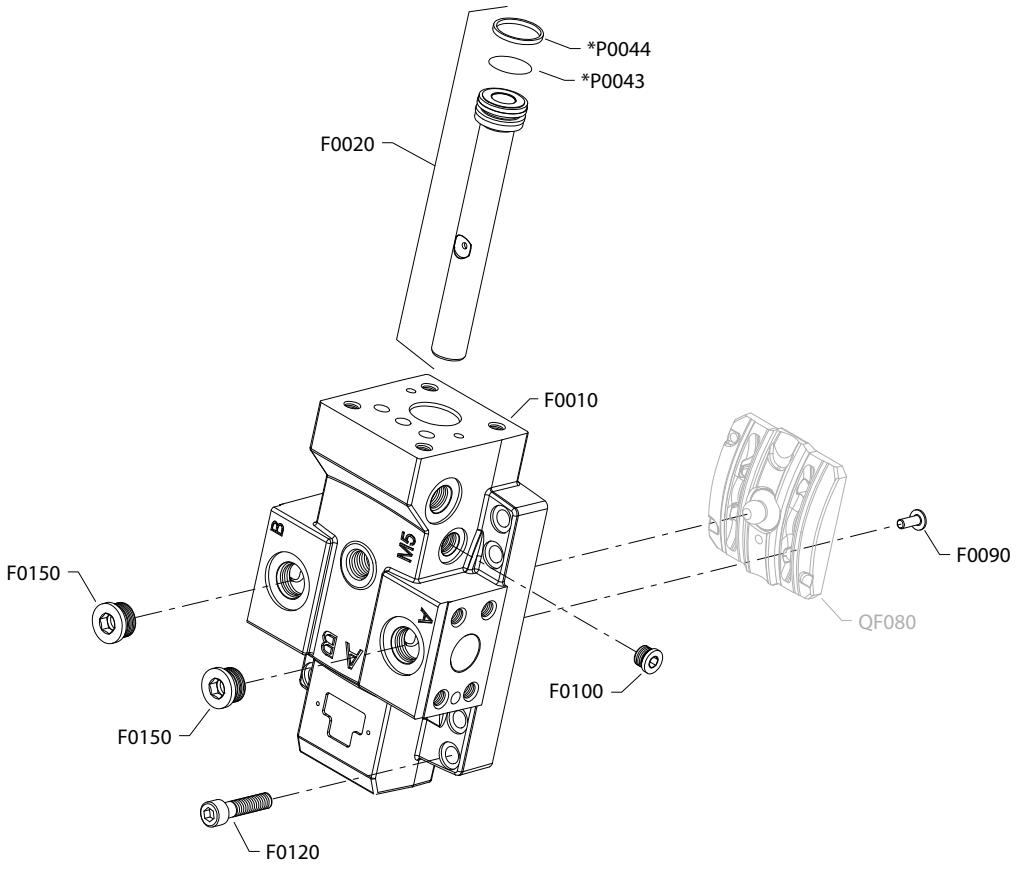

* Included in overhaul seal kit Q210

Order code: TB

Item	Date Begin	Date End	Part Number	Part Name	Qty. per Model/Kit
F0010	13-23		11115847	End cap, side ports	1
F0020	13-23		11140319	Servo piston assembly	1
F0090	13-23		11246801	Button head screw	1
F0100	13-23		140644	Plug assembly	1
F0120	13-23		703900	Screw, M16 x 70	8
F0150	13-23		664524 (9005110-9000)	Plug assembly	2
P0043	13-23		11063016	O-ring	1
P0044	13-23		11063013	Piston ring	1
QF080	13-23	18-16	11116072	Valve segment assembly (*SB-2018-028* on page 113)	1

End cap TC

Parts configuration

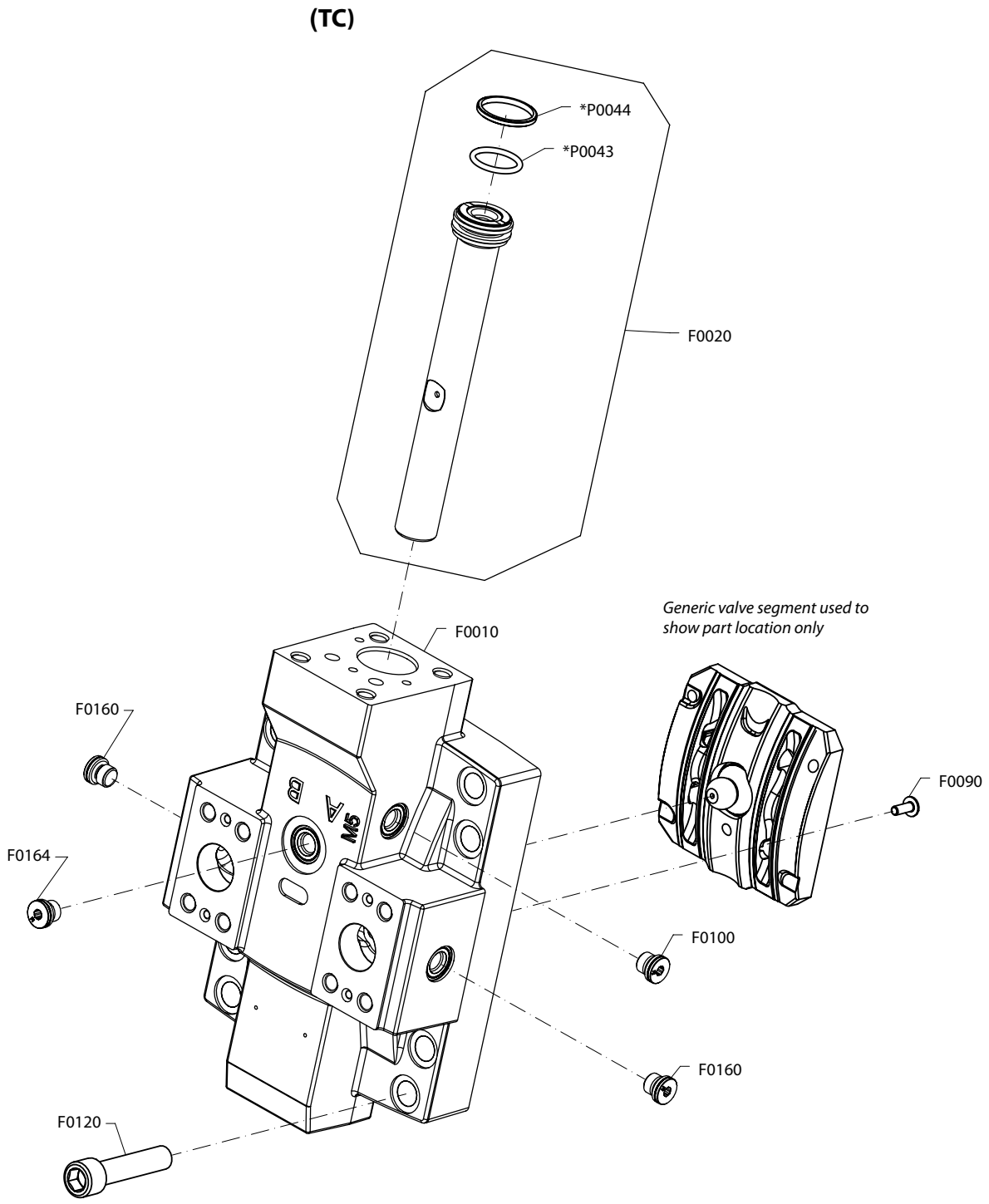

* = included in overhaul seal kit Q210

Order code: TC

Item	Date begin	Date end	Part number	Part name	Qty. per model/kit
F0010	24-20		11278649	End cap, axial ports (metric)	1
F0020	24-20		11140319	Servo piston assembly	1
F0090	24-20		11246801	Button head screw	1
F0100	24-20		11178808	Plug assembly (metric)	1
F0120	24-20		703900	Screw, M16 x 70	8
F0160	24-20		11178808	Plug assembly (metric)	2
F0164	24-20		11178808	Plug assembly (metric)	1
P0043	24-20		11063016	O-ring	1
P0044	24-20		11063013	Piston ring	1

© Danfoss A/S, 2026

Flange/housing

H1B 250cc flange/housing DN, DS

Parts configuration

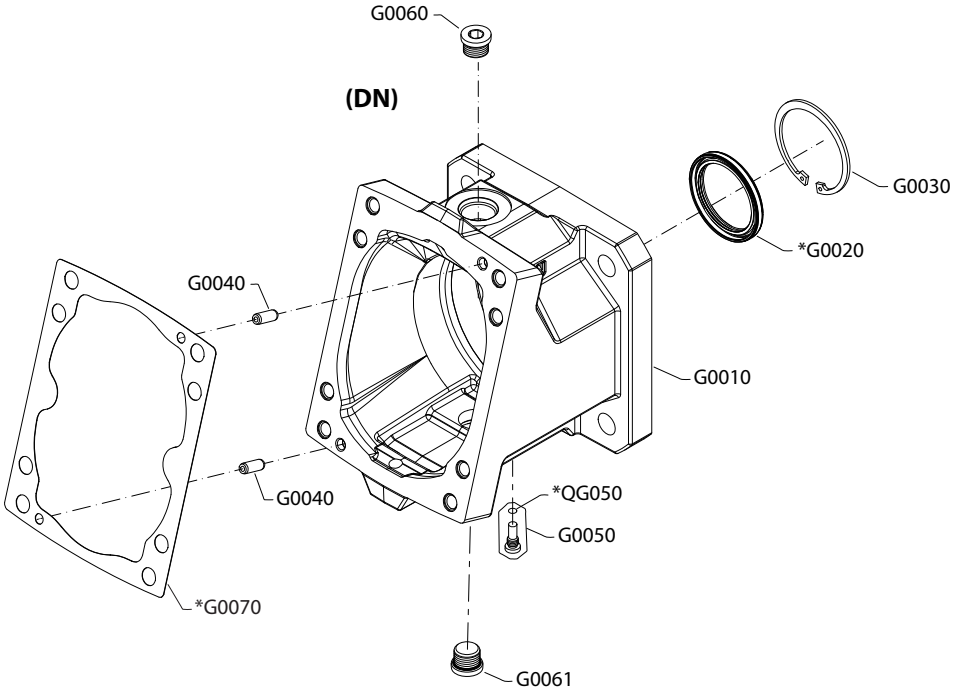

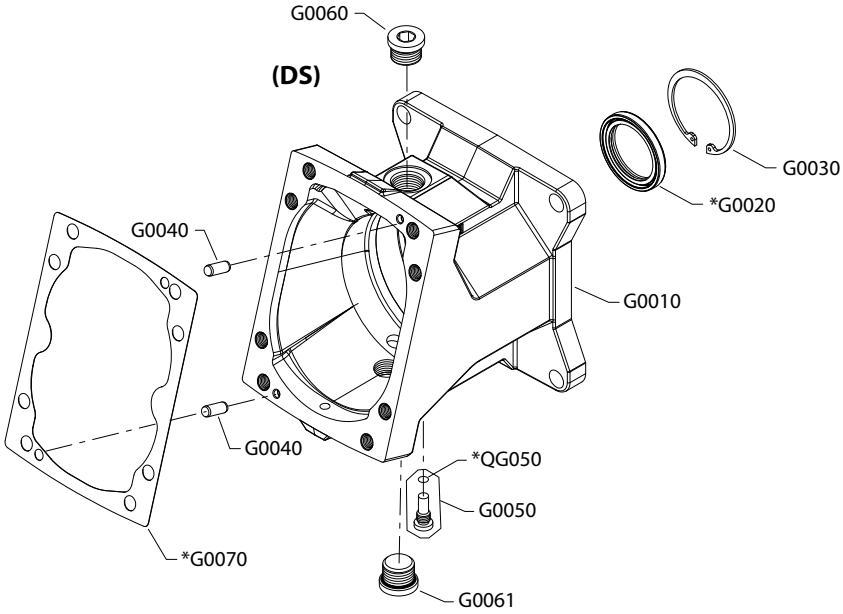

* Included in overhaul seal kit Q210.

Note

Options DN and DS are available in SAE and metric. Please order accordingly

Order code: DN

Item	Date Begin	Date End	Part Number	Part Name	Qty. per Model/Kit
G0010	16-23		11180520	Housing, DIN flange without speed sensor port (SAE)	1
G0010	21-11		11216057	Housing, DIN flange without speed sensor port (metric)	1
G0020	16-23		519022	Lip seal	1
G0030	16-23		392423	Retaining ring	1
G0040	16-23		11007677	Pin	2
G0050	16-23		11063948	Shaft location plug assembly	1
G0060	16-23		320002 (9005110-9200)	Plug assembly (SAE)	1
G0060	21-11		11164204	Plug assembly (metric)	1
G0061	16-23		320002 (9005110-9200)	Plug assembly (SAE)	1
G0061	21-11		11164204	Plug assembly (metric)	1
G0070	16-23		11090824	Gasket	1
J0010	16-23		11319819	PPU plug assembly	1
J0020	16-23		395822 (9007315-0603)	Screw, M6 x 12	1
QG050	16-23		001123 (9004201-2500)	O-ring	1

Order code: DS

G0010	16-23		11180520	Housing, DIN flange with speed sensor port (SAE)	1
G0010	18-32		11216057	Housing, DIN flange with speed sensor port (metric)	1
G0020	16-23		519022	Lip seal	1
G0030	16-23		392423	Retaining ring	1
G0040	16-23		11007677	Pin	2
G0050	16-23		11063948	Shaft location plug assembly	1
G0060	16-23		320002 (9005110-9200)	Plug assembly (SAE)	1
G0060	18-32		11164204	Plug assembly (metric)	1
G0061	16-23		320002 (9005110-9200)	Plug assembly (SAE)	1
G0061	18-32		11164204	Plug assembly (metric)	1
G0070	16-23		11090824	Gasket	1
QG050	16-23		001123 (9004201-2500)	O-ring	1

© Danfoss A/S, 2026

H1B 250cc flange/housing VN

Parts configuration

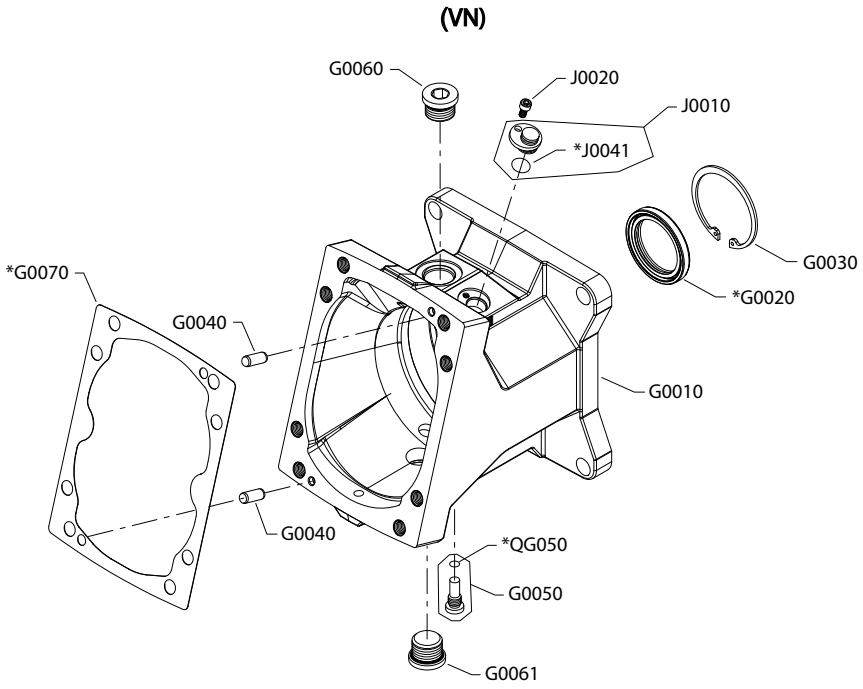

* Included in overhaul seal kit Q210

Note

Option VN is available in SAE and metric configurations. Please order accordingly.

Order code: VN

Item	Date Begin	Date end	Part Number	Part Name	
G0010	13-23		11089959	Housing, SAE flange with speed sensor port (SAE)	1
G0010	16-07		11172637	Housing, SAE flange with speed sensor port (metric)	1
G0020	13-23		519022	Lip seal	1
G0030	13-23		392423	Retaining ring	1
G0040	13-23		11007677	Pin	2
G0050	13-23		11063948	Shaft locating plug assembly	1
G0060	13-23		320002 (9005110-9200)	Plug assembly (SAE)	1
G0060	16-07		11164204	Plug assembly (metric	1
G0061	13-23		320002 (9005110-9200)	Plug assembly (SAE)	1
G0061	16-07		11164204	Plug assembly (metric)	1
G0070	13-23		11090824	Gasket	1
J0010	13-23		11319819	PPU plug assembly	1
J0020	13-23		395822 (9007315-0603)	Screw, M6 x 12	1
J0041	13-23		11013397	O-ring	1
QG050	13-23		001123 (9004201-2500)	O-ring	1

© Danfoss A/S, 2026

H1B 250cc flange/housing VS

Parts configuration

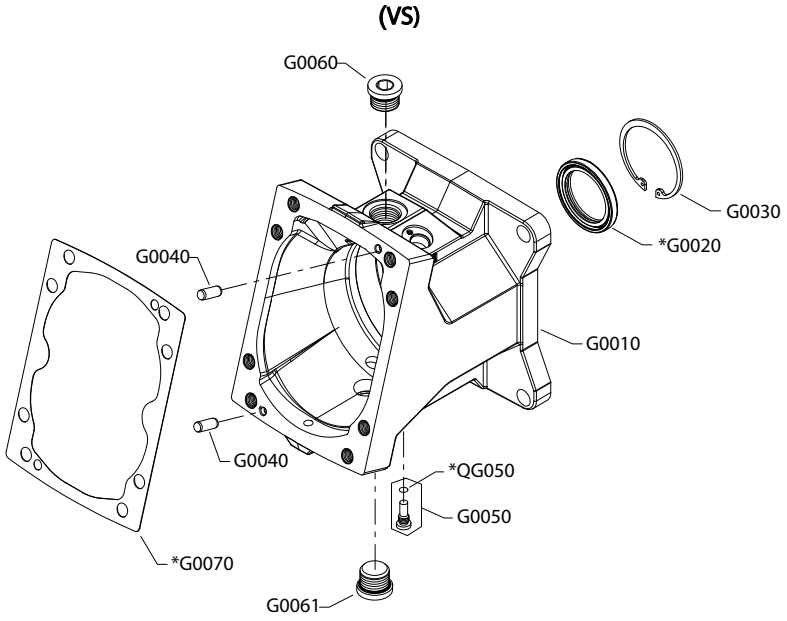

* Included in overhaul seal kit Q210

Note

Option VS is available in SAE and metric configurations. Please order accordingly.

Order code: VS

Item	Date Begin	Date End	Part Number	Part Name	Qty. per Model/Kit
G0010	13-23		11089959	Housing, SAE flange with speed sensor port (SAE)	1
G0010	15-45		11172637	Housing, SAE flange with speed sensor port (metric)	1
G0020	13-23		519022	Lip seal	1
G0030	13-23		392423	Retaining ring	1
G0040	13-23		11007677	Pin	2
G0050	13-23		11063948	Shaft locating plug assembly	1
G0060	13-23		320002 (9005110-9200)	Plug assembly (SAE)	1
G0060	15-45		11164204	Plug assembly (metric)	1
G0061	13-23		320002 (9005110-9200)	Plug assembly (SAE)	1
G0061	15-45		11164204	Plug assembly (metric)	1
G0070	13-23		11090824	Gasket	1
QG050	13-23		001123 (9004201-2500)	O-ring	1

© Danfoss A/S, 2026

Shaft

H1B 250cc shaft DN-PS

Parts configuration

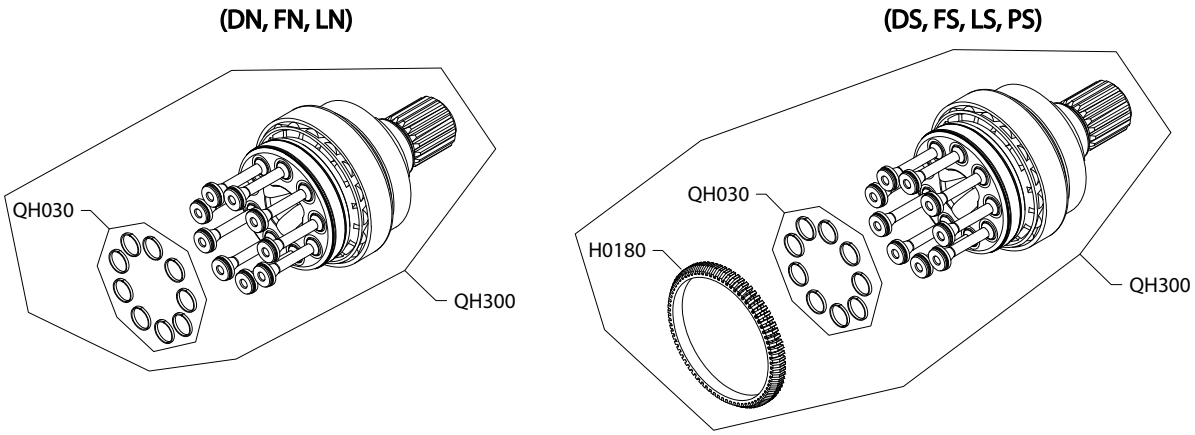

Order code: DN

Item	Date Begin	Date End	Part Number	Part Name	Qty. per Model/Kit
QH030	13-23		11100639	Piston ring kit	1
QH300	13-23		11094973	Shaft assembly, 27 tooth, 16/32 pitch	1

Order code: DS

H180	13-23		11086231	Speed ring	1
QH030	13-23		11100639	Piston ring kit	1
QH300	13-23		11094970	Shaft assembly, 27 tooth, 16/32 pitch, speed ring	1

Order code: FN

QH030	13-23		11100639	Piston ring kit	1
QH300	13-23		11086222	Shaft assembly, 15 tooth	1

Order code: FS

H180	13-23		11086231	Speed ring	1
QH030	13-23		11100639	Piston ring kit	1
QH300	13-23		11086198	Shaft assembly, 15 tooth, speed ring	1

Order code: LS

H0180	17-33		11086231	Speed ring	1
QH030	17-33		11100639	Piston ring kit	1
QH300	17033		11198219	Shaft assembly, 24 tooth	1

Order code: LN

QH030	18-26		11100639	Piston ring kit	1
QH300	18-26		11221814	Shaft assembly	1

Order code: PS

H180	13-23		11086231	Speed ring	1
QH030	13-23		11100639	Piston ring kit	1
QH300	13-23		11096985	Shaft assembly, 27 tooth, 16/32 pitch, speed ring	1

© Danfoss A/S, 2026

Speed sensor

H1B 250cc speed sensor

Parts configuration

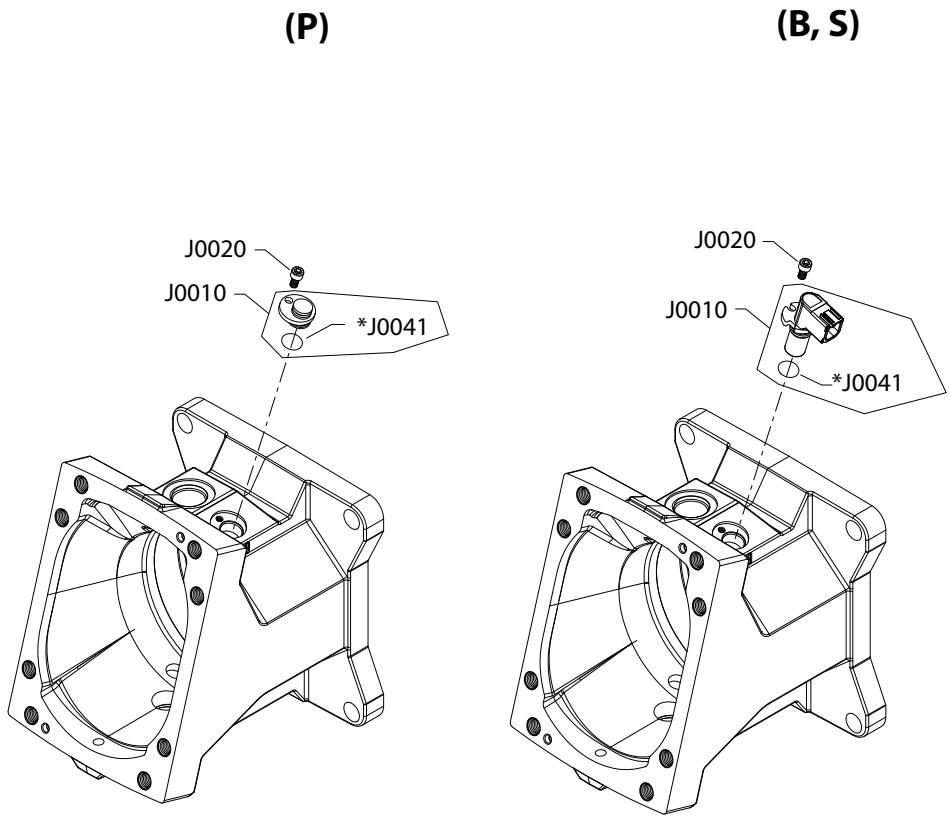

* Included in overhaul seal kit Q210

Order code: B

Item	Date Begin	Date End	Part Number	Part Name	Qty. per Model/Kit
J0010	12-15		11232698	Speed sensor assembly, 7 to 32 volt	1
J0020	12-15		395822 (9007315-0603)	Screw, M6 x 12	1
J0041	12-15		11013397	O-ring	1

Order code: N

No parts

Order code: P

J0010	13-23		11319819	Plug assembly	1
J0020	13-23		395822 (9007315-0603)	Screw, M6 x 12	1
J0041	13-23		11013397	O-ring	1

Order code: S

J0010	13-23		149055	Speed sensor assembly, 4.5 to 8 volt	1
J0020	13-23		395822 (9007315-0603)	Screw, M6 x 12	1
J0041	13-23		11013397	O-ring	1

© Danfoss A/S, 2026

Loop flushing

H1B 250cc loop flushing A-N

Parts configuration

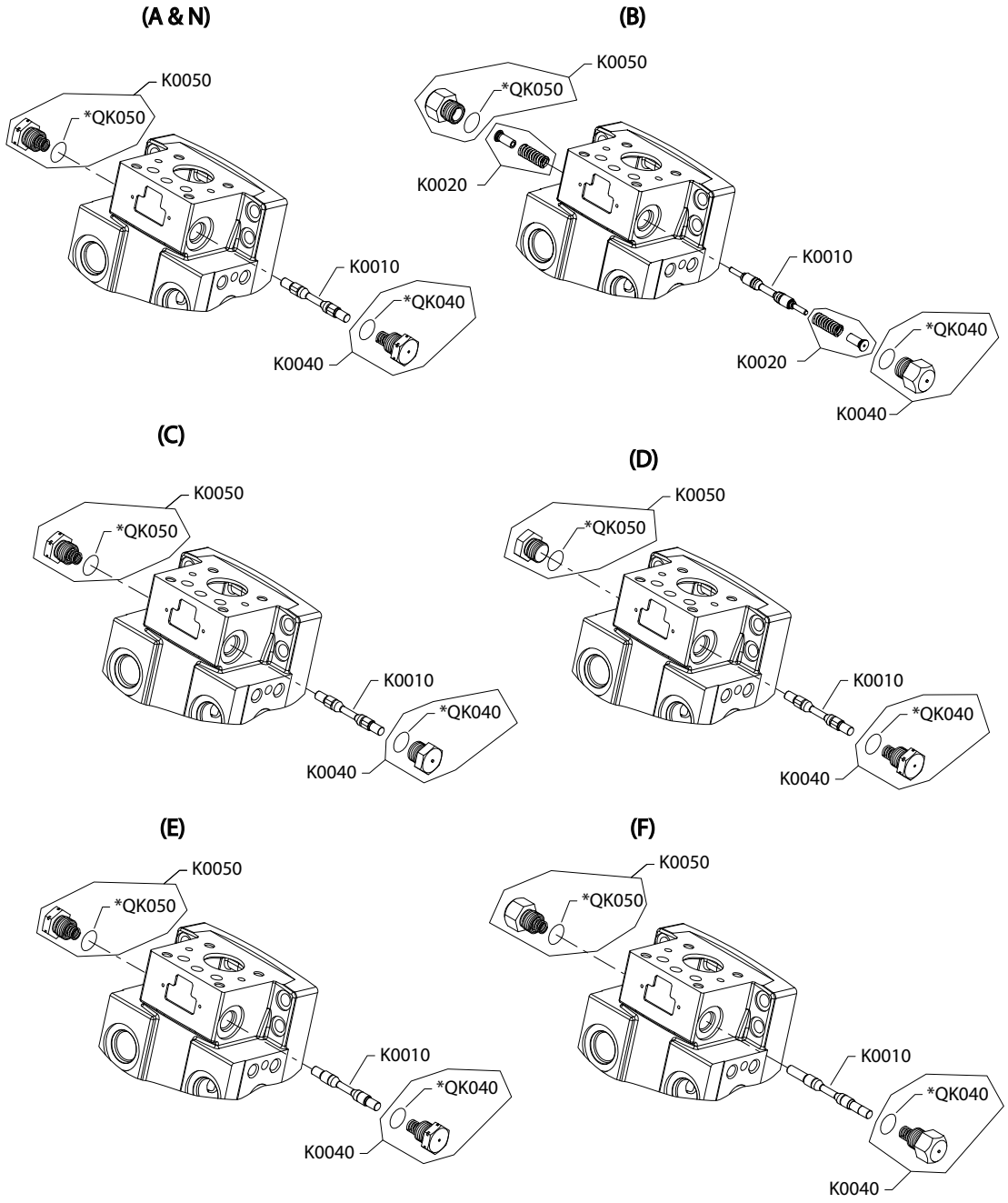

* Included in overhaul seal kit Q210

Order code: A and N

Item	Date Begin	Date End	Part Number	Part Name	Qty. per Model/Kit
K0010	11-18	19-43	11031106	Spool (*SB-2020-038* on page 115)	1
K0010	19-44		11165542	Spool	1
K0040	11-18		11160780	Plug/spring assembly	1
K0050	11-18		11160780	Plug/spring assembly	1
QK040	11-18		149052	O-ring	1
QK050	11-18		149052	O-ring	1

Order code: B

K0010	21-34		11251511	Spool (*SB-2022-004* on page 117)	1
K0020	15-45		11101439	Spring/plug assembly	2
K0040	15-45		11101035	Plug assembly	1
K0050	15-45		11101035	Plug assembly	1
QK040	15-45		149052	O-ring	1
QK050	15-45		149052	O-ring	1

Order code: C

K0010	12-15	19-43	11031106	Spool	1
K0040	12-15		11115123	Plug assembly	1
K0050	12-15		11160780	Plug/spring assembly	1
QK040	12-15		149052	O-ring	1
QK050	12-15		149052	O-ring	1

Order code: D

K0010	12-15		11031106	Spool	1
K0040	12-15		11160780	Plug/spring assembly	1
K0050	12-15		11115123	Plug assembly	1
QK040	12-15		149052	O-ring	1
QK050	12-15		149052	O-ring	1

Order code: E

K0010	14-41		11157411	Spool	1
K0040	14-41		11160780	Plug/spring assembly	1
K0050	14-41		11160780	Plug/spring assembly	1
QK040	14-41		149052	O-ring	1
QK050	14-41		149052	O-ring	1

Order code: F

K0010	14-41		11157409	Spool	1
K0040	14-41		11158323	Plug/spring assembly	1
K0050	14-41		11158323	Plug/spring assembly	1
QK040	14-41		149052	O-ring	1
QK050	14-41		149052	O-ring	1

© Danfoss A/S, 2026

H1B loop flushing 05-50

Parts configuration

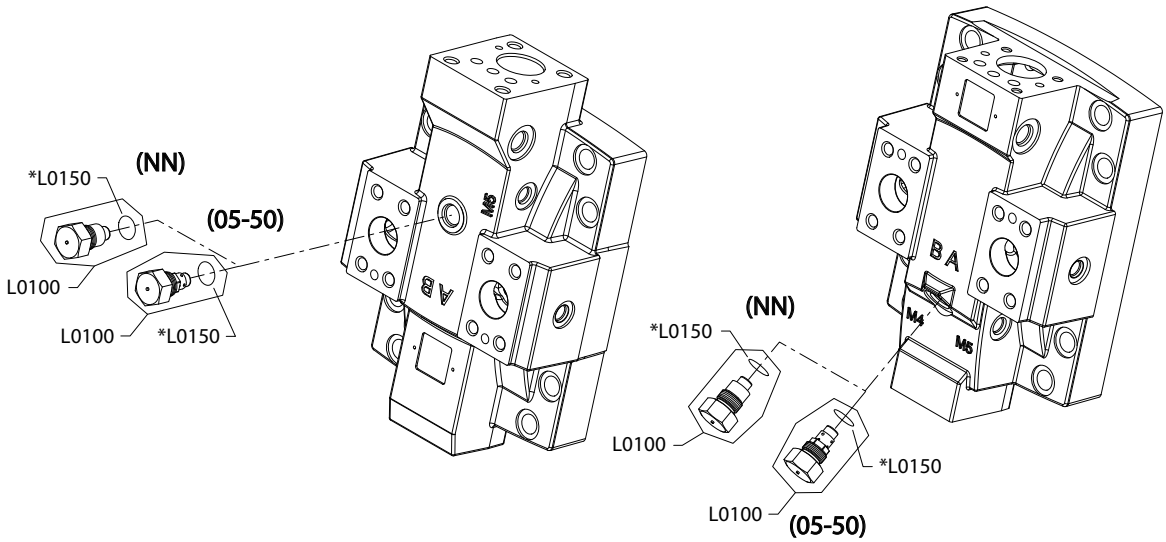

Note

Generic end caps shown

* Included in overhaul seal kit Q210

Order code: 05

Item	Date Begin	Date End	Part Number	Part Name	Qty. per Model/Kit
L0100	11-18		11008698	Loop flushing relief valve, 5L/min	1
L0150	11-18		149052	O-ring	1

Order code: 10

L0100	11-18		11003448	Loop flushing relief valve, 10L/min	1
L0150	11-18		149052	O-ring	1

Order code: 15

L0100	11-18		11003450	Loop flushing relief valve, 15L/min	1
L0150	11-18		149052	O-ring	1

Order code: 20

L0100	11-18		11001676	Loop flushing relief valve, 20L/min	1
L0150	11-18		149052	O-ring	1

Order code: 30

L0100	13-23		11008700	Loop flushing relief valve, 30L/min	1
L0150	13-23		149052	O-ring	1

Order code: 40

L0100	13-23		11008701	Loop flushing relief valve, 40L/min	1
L0150	13-23		149052	O-ring	1

Order code: 50

L0100	13-23		11001697	Loop flushing relief valve, 50L/min	1
L0150	13-23		149052	O-ring	1

Note

Part numbers for option NN are continued on the next page.

H1B loop flushing NN

Parts configuration

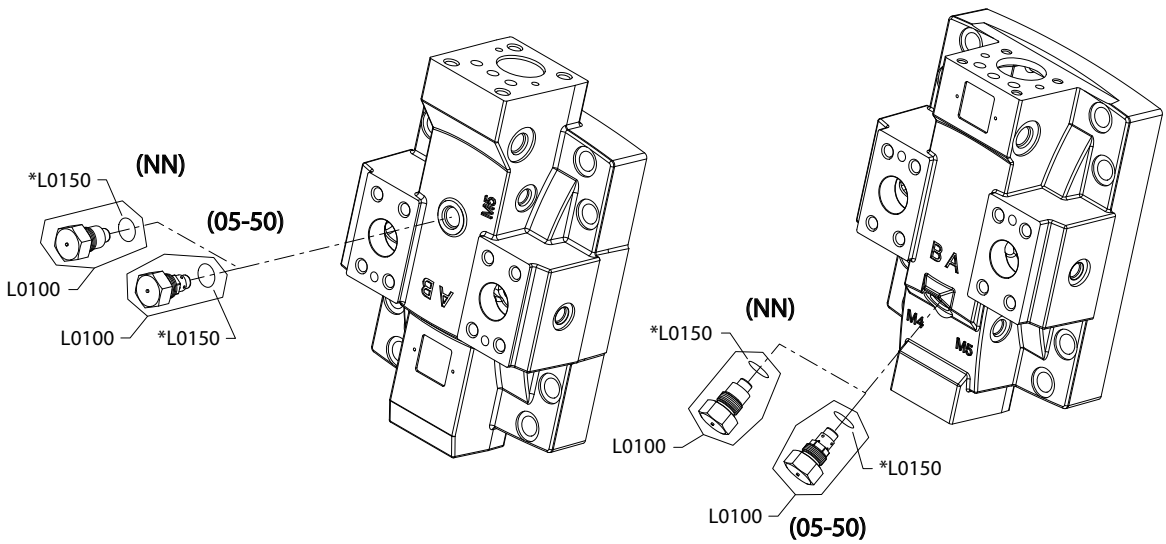

Note

Generic end caps shown

* Included in overhaul seal kit Q210

Order code: NN

Item	Date Begin	Date End	Part Number	Part Name	Qty. per Model/Kit
L0100	11-18		11291837	Plug assembly	1
L0150	11-18		149052	O-ring	1

Special hardware and displacement

H1B 250cc special hardware AN, AP

Parts configuration

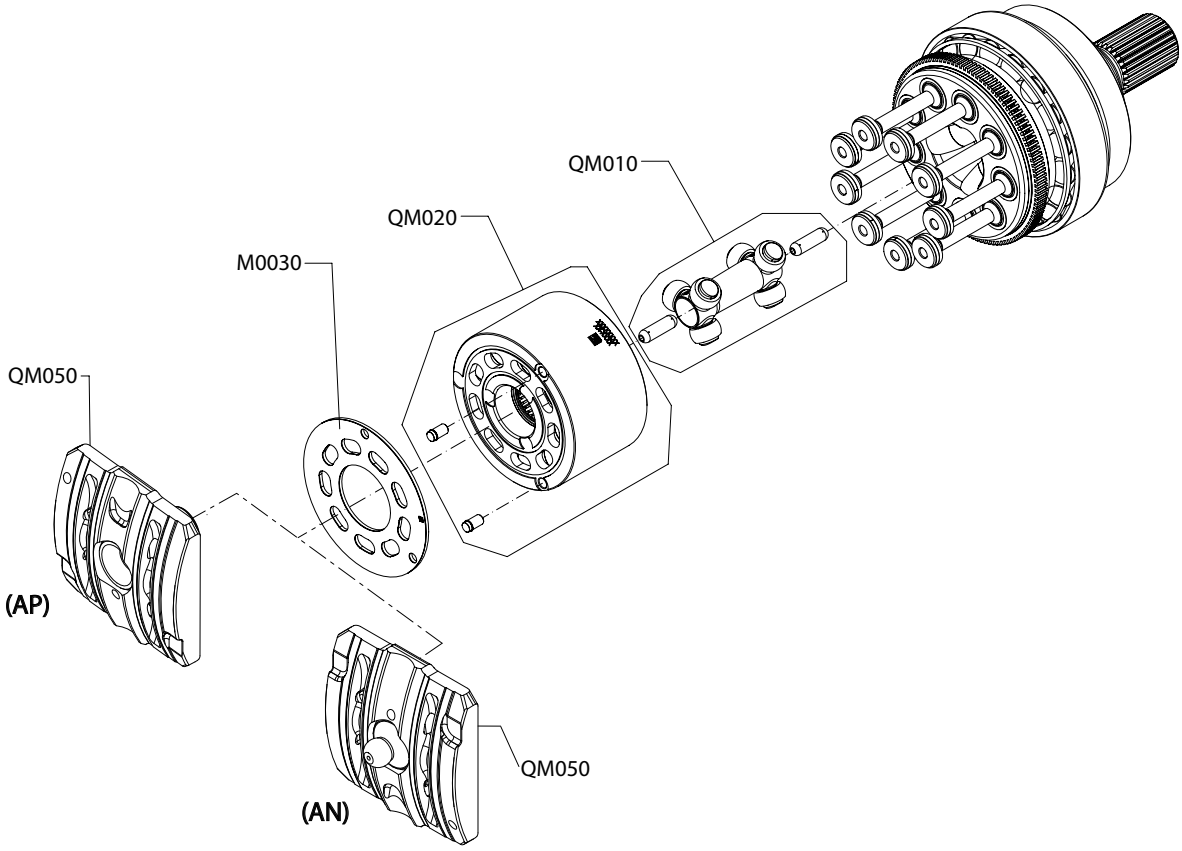

Note

Generic parts used to show location only.

Order code: AN

Item	Date Begin	Date End	Part Number	Part Name	Qty. per Model/Kit
M0030	20-44		11265225	Bearing plate	1
QM010	20-44		11086121	Synch shaft assembly	1
QM020	20-44		11270698	Cylinder block assembly	1
QM050	20-44		11270699	Valve segment assembly (2-position)	1

Order code: AP

M0030	20-44		11265225	Bearing plate	1
QM010	20-44		11086121	Synch shaft assembly	1
QM020	20-44		11270698	Cylinder block assembly	1
QM050	20-44		11270513	Valve segment assembly (proportional)	1

H1B 250cc special hardware HN, HP

Parts configuration

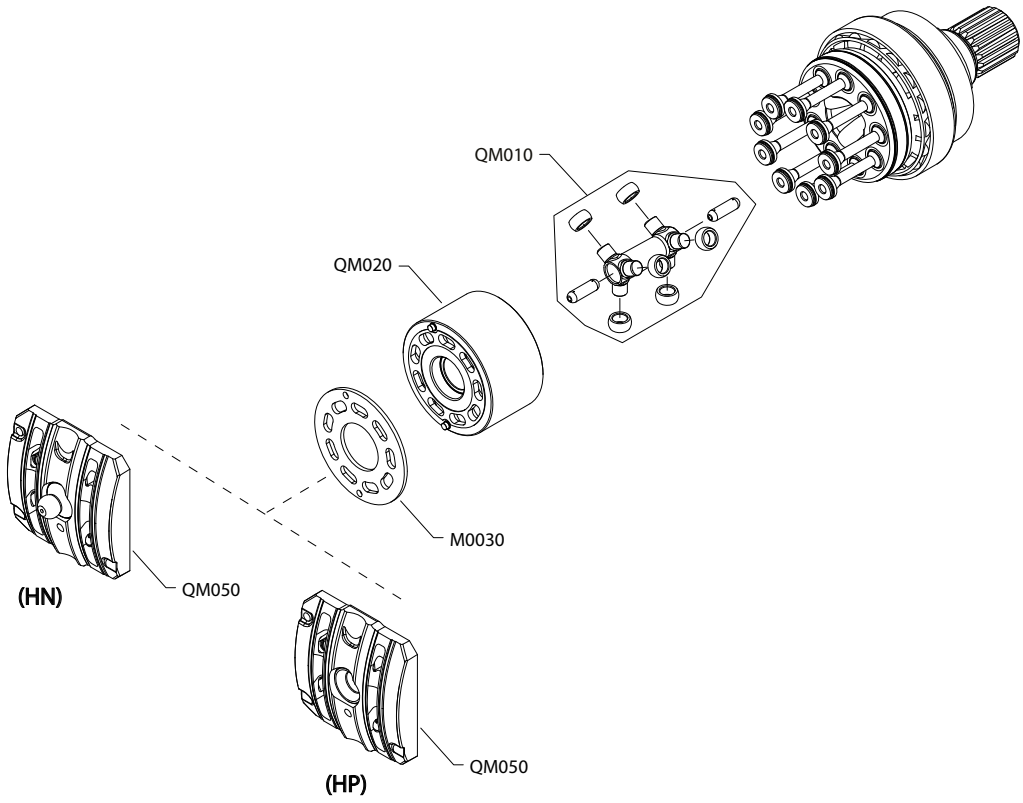

Order code: HN

Item	Date Begin	Date End	Part Number	Part Name	Qty. per Model/Kit
M0030	18-06		11195864	Bearing plate	1
QM010	18-06		11086121	Synch shaft assembly	1
QM020	18-06		11188008	Cylinder block assembly	1
QM050	18-06		11202372	Valve segment assembly (2-position)	1

Order code: HP

M0030	18-06		11195864	Bearing plate	1
QM010	18-06		11086121	Synch shaft assembly	1
QM020	18-06		11188008	Cylinder block assembly	1
QM050	18-06		11187971	Valve segment assembly (proportional)	1

H1B 250cc special hardware NN, NP

Parts configuration

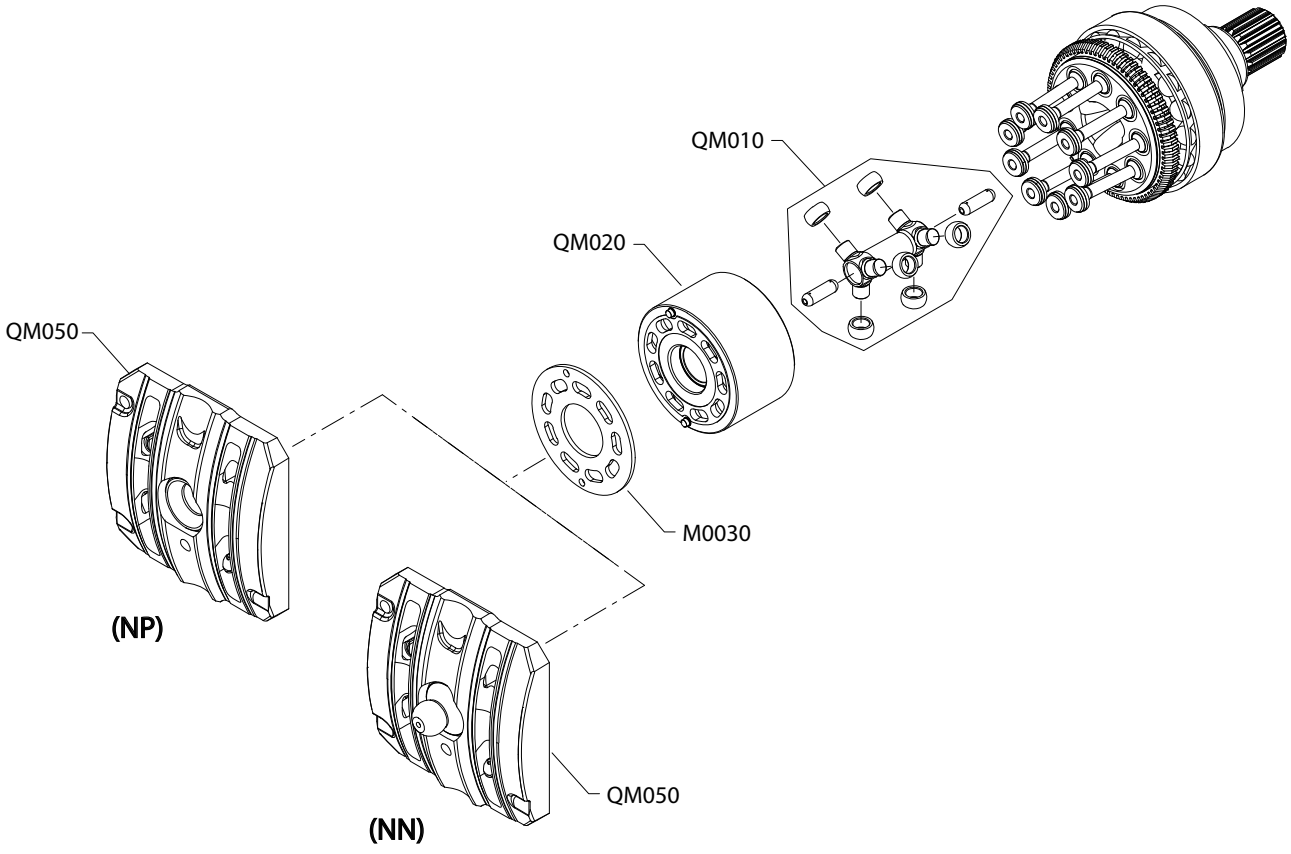

Order code: NN

Item	Date Begin	Date End	Part Number	Part Name	Qty. per Model/Kit
QM010	13-23		11086121	Synch shaft assembly	1
QM020	13-23		11086152	Cylinder block assembly	1
M0030	13-23		515370	Bearing plate	1
QM050	18-16		11116072	Valve segment assembly (2-position)	1

Order code: NP

QM010	13-23		11086121	Synch shaft assembly	1
QM020	13-23		11086152	Cylinder block assembly	1
M0030	13-23		515370	Bearing plate	1
QM050	18-16		11086155	Valve segment assembly (proportional)	1

H1B 250cc minimum displacement

Parts configuration

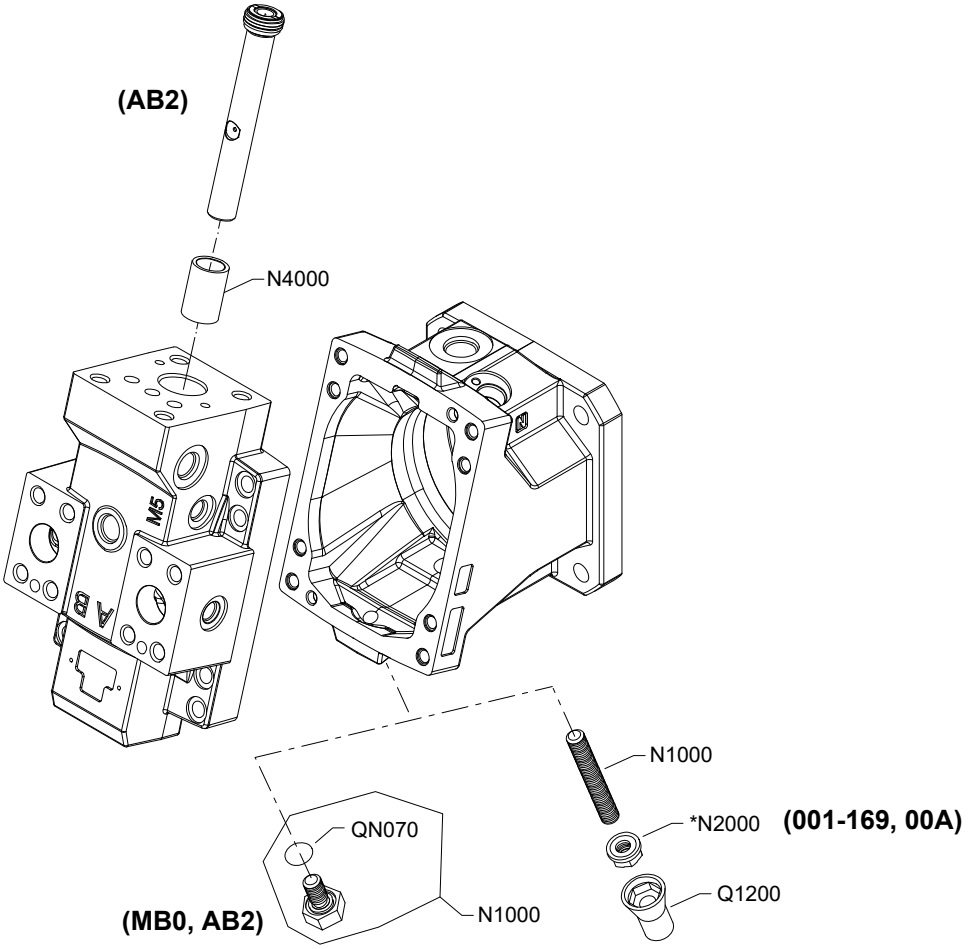

* Included in overhaul seal kit Q210

Order code: 001-052, 00A

Item	Date Begin	Date End	Part Number	Part Name	Qty. per Model/Kit
N1000	13-23		750646	Set screw, 0-52cc, M12 x 75	1
N2000	13-23		076042	Seal nut, M12	1
Q1200	13-23		770842	Plastic cap, green	1

Order code: 053-103

N1000	13-23		749564	Set screw, 53-103cc, M12 x 90	1
N2000	13-23		076042	Seal nut, M12	1
Q1200	13-23		770842	Plastic cap, green	1

Order code: 104-169

N1000	13-23		11094518	Set screw, 104-169cc, M12 x 110	1
N2000	13-23		076042	Seal nut, M12	1
Q1200	13-23		770842	Plastic cap, green	1

Order code: AB2

N1000	13-23		11161812	Set screw, 200cc, M12 x 40	1
N4000	13-23		11157830	Spacer, 69.16mm	1
QN070	13-23		11001952	O-ring	1

Order code: MB0

N1000	13-23		11161812	Seal plug assembly	1
QN070	13-23		11001952	O-ring	1

H1B 250cc maximum displacement

Parts configuration

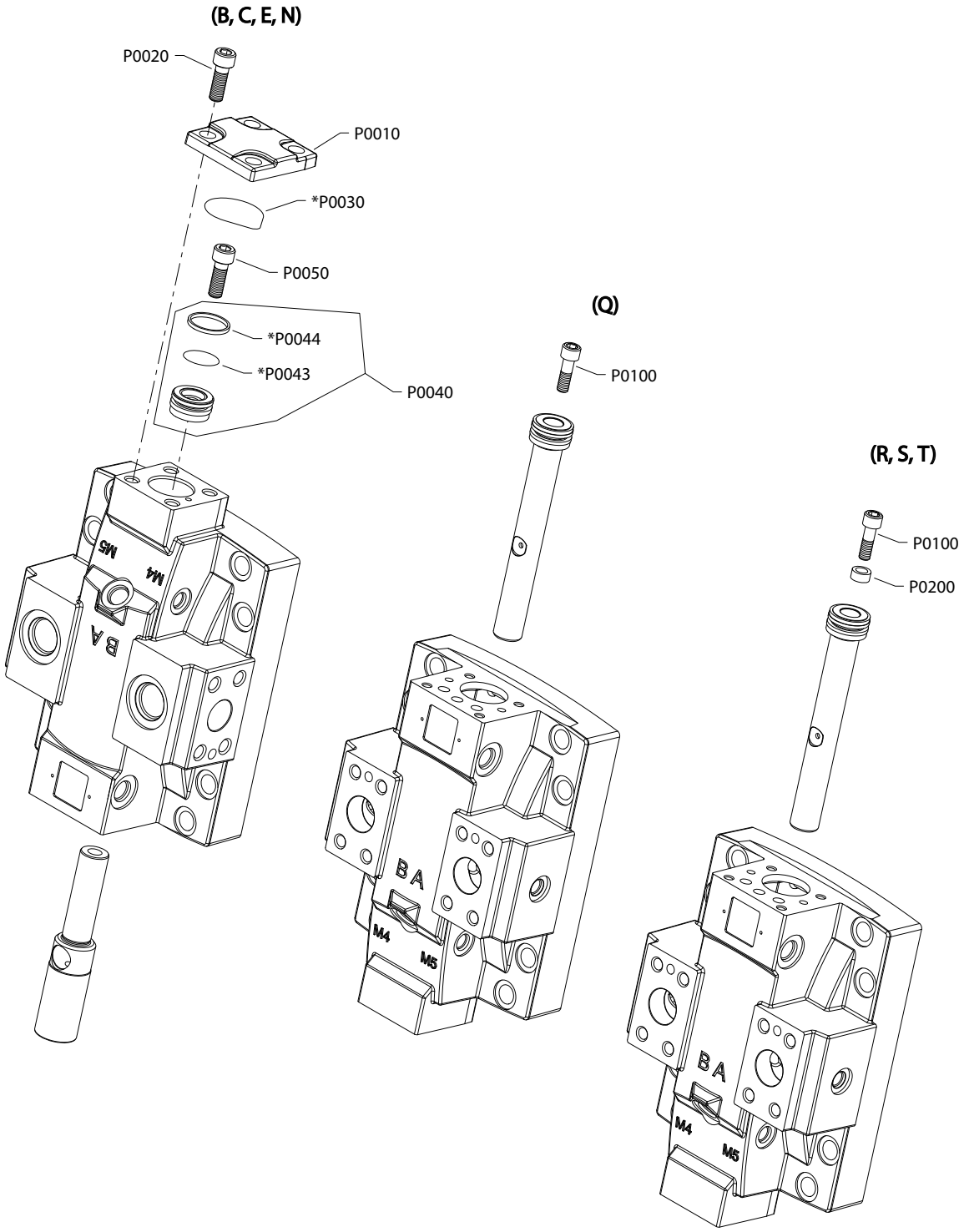

* Included in overhaul seal kit Q210

Caution

During removal of screw (P0050) and set screw (F0070), the servo piston assembly will be subjected to high torque and may create a pinch point for fingers. Use caution when disassembling these components from the servo piston. For more information, see *SB-2019-017* on page 114.

Order code: B

Item	Date Begin	Date End	Part Number	Part Name	Qty. per Model/Kit
P0010	18-13		11001110	Servo piston cover	1
P0020	18-13		737866	Screw, M12 x 30	4
P0030	18-13		11050757	O-ring	1
P0040	18-13		11212757	Servo piston assembly	1
P0043	18-13		11063016	O-ring	1
P0044	18-13		11063013	Piston ring	1
P0050	18-13		11069403	Screw, M14 x 35	1

Order code: C

P0010	13-23		11001110	Servo piston cover	1
P0020	13-23		737866 (9007314-1207)	Screw, M12 x 30	4
P0030	13-23		11050757	O-ring	1
P0040	13-23		11132145	Servo piston assembly	1
P0043	13-23		11063016	O-ring	1
P0044	13-23		11063013	Piston ring	1
P0050	13-23		11069403	Screw, M14 x 35	1

Order code: E

P0010	13-23		11001110	Servo piston cover	1
P0020	13-23		737866 (9007314-1207)	Screw, M12 x 30	4
P0030	13-23		11050757	O-ring	1
P0040	13-23		11125475	Servo piston assembly	1
P0043	13-23		11063016	O-ring	1
P0044	13-23		11063013	Piston ring	1
P0050	13-23		11069403	Screw, M14 x 35	1

Note

Parts continue to next 2 pages.

Parts configuration

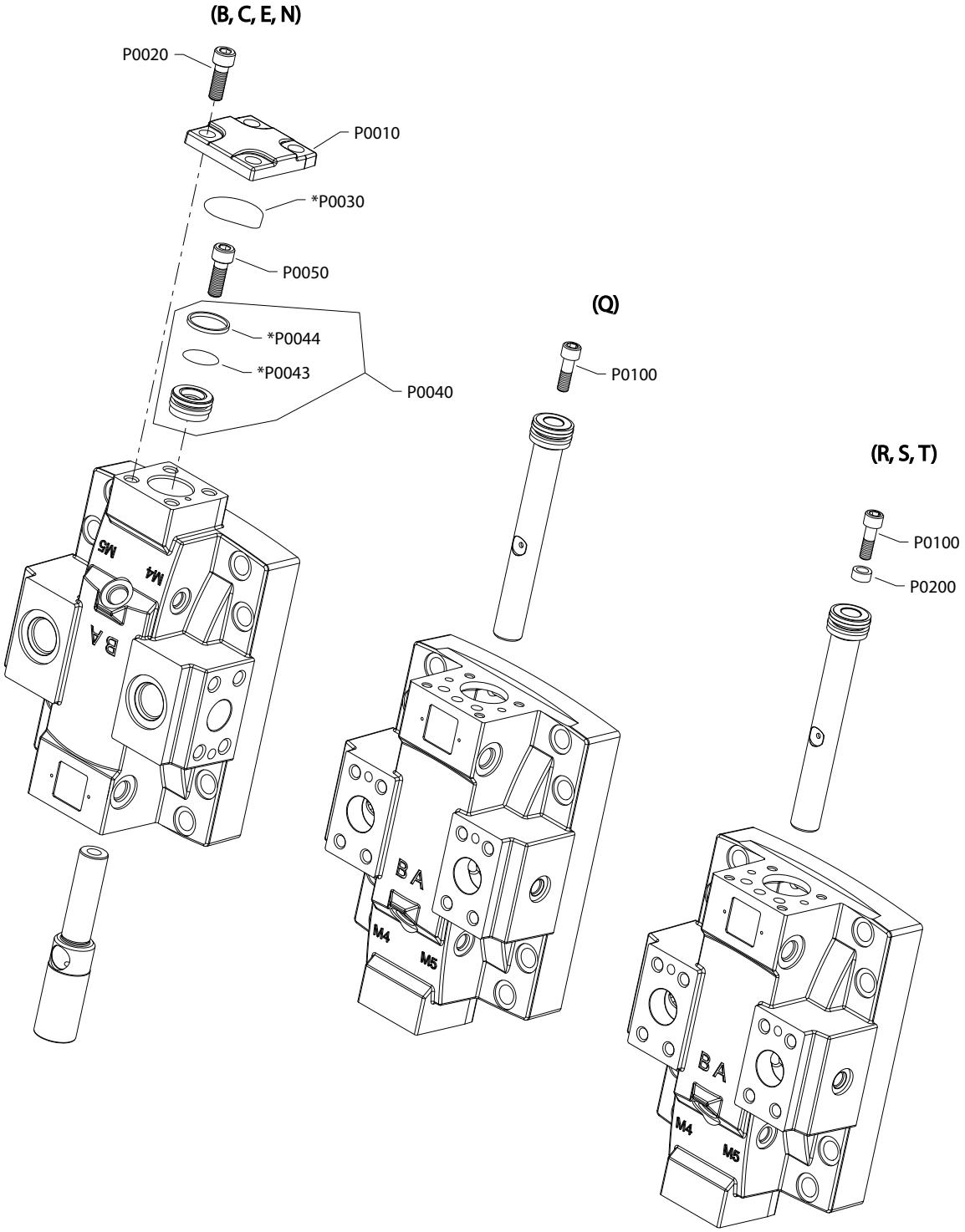

* Included in overhaul seal kit Q210

Caution

During removal of screw (P0050) and set screw (F0070), the servo piston assembly will be subjected to high torque and may create a pinch point for fingers. Use caution when disassembling these components from the servo piston. For more information, see *SB-2019-017* on page 114.

Order code: N

Item	Date Begin	Date End	Part Number	Part Name	Qty. per Model/Kit
P0010	13-23		11001110	Servo piston cover	1
P0020	13-23		737866 (9007314-1207)	Screw, M12 x 30	4
P0030	13-23		11050757	O-ring	1
P0040	13-23		11062354	Servo piston assembly	1
P0043	13-23		11063016	O-ring	1
P0044	13-23		11063013	Piston ring	1
P0050	13-23		11069403	Screw, M14 x 35	1

Order code: Q

P0100	14-27		293225	Screw, M10 x 30	1

Order code: R

P0100	14-27		293225	Screw, M10 x 30	1
P0200	14-27		672071	Spacer, 4.50mm	1

Order code: S

P0100	13-23		293225	Screw, M10 x 30	1
P0200	13-23		318683	Spacer, 9.00mm	1

Order code: T

P0100	14-27		727586	Screw, M10 x 35	1
P0200	14-27		643098	Spacer, 14.00mm	1

Order code: Z

No parts

Overhaul seal kit

H1B 250cc seal kit

Item	Date Begin	Date End	Part Number	Part Name	Qty. per Model/Kit
Q210	13-23		11172555	Overhaul seal kit, H1B250	1
B0034	13-23		085043 (9004201-3700)	O-ring, 11.89 x 1.98, nitrile	2
B0035	13-23		11001952	O-ring, 18.00 x 1.50, nitrile	1
C0130	13-23		149040	Control seal	1
C0130	13-23		11016168	Control seal, 2-position	1
G0020	13-23		519022	Lip seal	1
G0070	13-23		11090824	End cap gasket, H1B250	1
J0041	13-23		11013397	O-ring, 15.60 x 1.78, nitrile	1
L0150	13-23		149052	O-ring, 15.30 x 2.20, nitrile	1
M223	13-23		085043 (9004201-3700)	O-ring, 11.89 x 1.98, nitrile	1
M224	13-23		732479 (9004105-0100)	O-ring, 6.07 x 1.78, viton	1
N2000	13-23		076042	Seal nut, M12	1
P0030	13-23		11050757	O-ring, 47.00 x 3.00, nitrile	1
P0043	13-23		11063016	O-ring, 26.64 x 2.62, nitrile	1
P0044	13-23		11063013	Piston ring	1
Q1200	13-23		770842	Plastic cap, green	1
QC160	13-23		039297 (9004201-1200)	O-ring, 6.07 x 1.63, nitrile	1
QG050	13-23		001123 (9004201-2500)	O-ring, 8.92 x 1.83, nitrile	1
QG055	13-23		039297 (9004201-1200)	O-ring, 6.07 x 1.63, nitrile	1
QK0040	13-23		149052	O-ring, 15.30 x 2.20, nitrile	2
QK0050	13-23		149052	O-ring, 15.30 x 2.20, nitrile	2

Service bulletin

SB-2018-028

Products affected

H1B motors

Subject

Parts manual change for valve segment assembly

Description

Danfoss has reorganized topics in the Parts Manual for H1B 60cc, 80cc, 110cc, 160cc, 210cc and 250cc motors. The valve segment assembly (Item QF080) has been moved to the “Special Hardware/Common Parts” section (Option M). It was formerly located in the “End Cap” section (Option F).

Because of the move, 2-position and proportional valve segments will need to be included in their own order code designation. The order code for 2-position valve segments will be NN and the order code for proportional valve segments will be NP.

Part numbers have not changed.

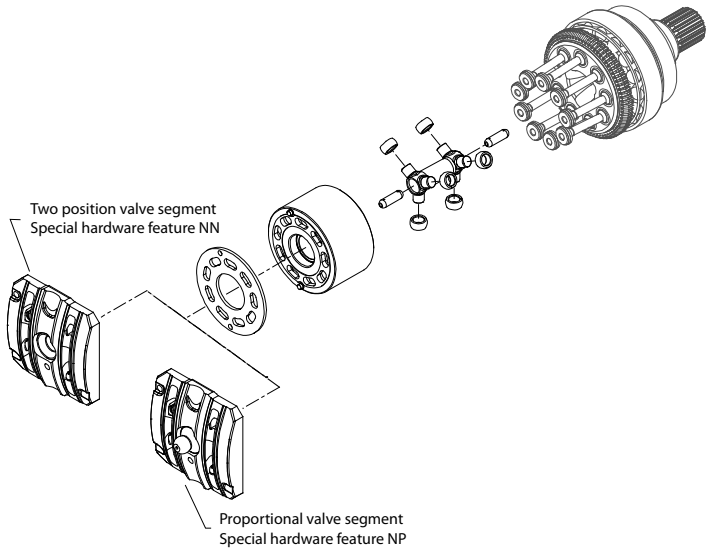

Models affected

H1B 60, 80, 110, 160, 210 and 250cc motors

Serial numbers

This change became effective at 18-12-xxxxx

Part number affected

Not applicable

Parts disposition

Not applicable

SB-2019-017

Products affected

H1 Bent Axis Motors Size 060/080/110/160/210/250

Subject

Potential injury risk on motors with proportional control servo systems

Description

Danfoss Power Solutions has identified a potential safety concern when performing disassembly and reassembly of the H1B bent axis motors. Specifically, when removing and installing the servo piston assembly, it is important the instructions as documented within the *H1B Bent Axis Variable Displacement Motors Repair Instructions* (document AX152886484588) are strictly followed.

Caution

Failure to follow these instructions while performing a repair can result in a severe laceration or finger amputation injury.

Injury may occur if the removal of the servo piston bolt (P0050) is performed after the end cap has been removed along with the valve segment (QM050) and setting lug (F0050). If torque is applied to the servo piston bolt (P0050) while an operator's fingers are in proximity to the empty and exposed setting lug bore, a severe laceration or finger amputation injury may occur.

The risk of injury is also present during the reassembly of the servo piston assembly (P0040 and F0020) in the end cap. If torque is applied to the servo piston bolt (P0050) while an operator's fingers are in the proximity to the empty and exposed setting lug bore, a severe laceration or finger amputation injury may occur.

It is important that the setting lug and valve segment (QM050) are properly installed prior to installing and torquing the servo piston bolt (P0050).

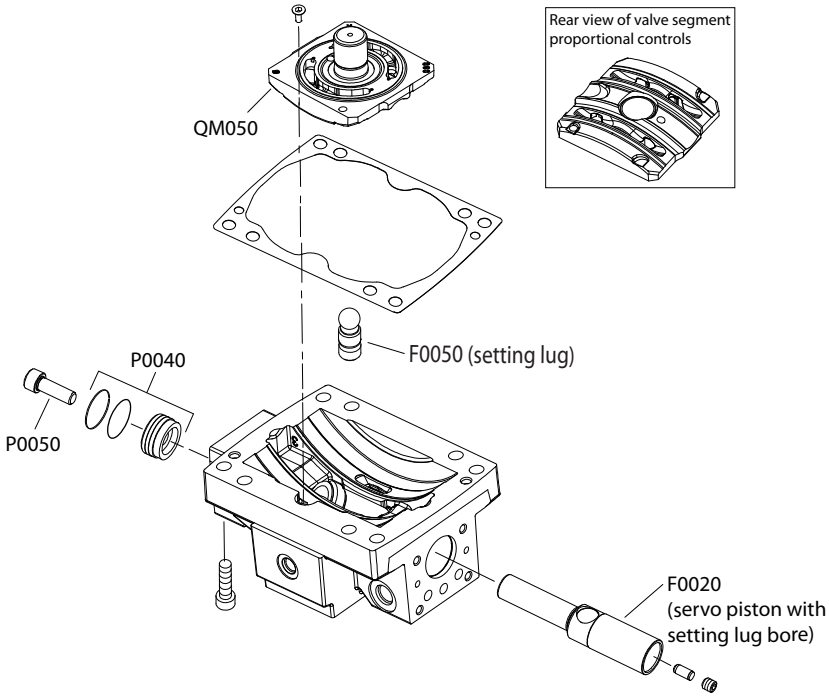

SB-2020-038

Products affected

H1B motors

Subject

6.5 bar shuttle spool

Description

Danfoss has changed the design of the 6.5 bar shuttle spool used in H1B motors. With this change a new part number will be issued. The old part number is still active for older end caps.

The flats on the current shuttle spool aid in the dampening of the shuttle shift. Now the dampening is corrected by the addition of 2mm bores in the end cap. The end caps were updated 17-1. The new spool (without flats) cannot be used in end caps without 2mm bore. The current spool can be used in end caps with and without 2mm bore.

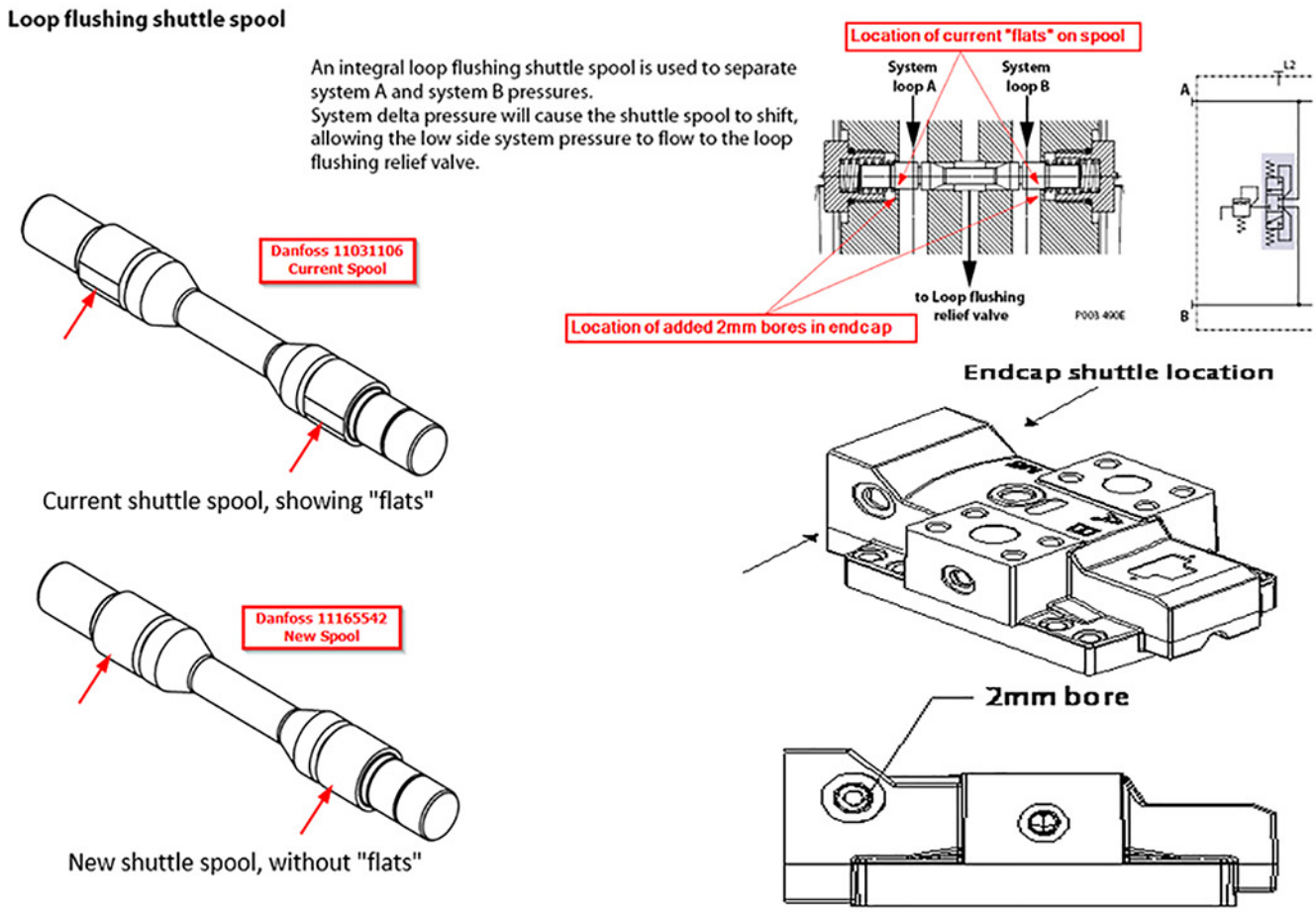

Models affected

H1B motors

Serial numbers affected

This change became effective at X.

Part numbers affected

Description	Old part number	New part number
Loop flushing spool	11031106	-
Loop flushing spool	-	11165542

Parts disposition

Non-interchangeable

SB-2022-004

Products affected

H1B Motors

Subject

Loop Flush Spool

Description

Danfoss improved the design of loop flush spool which eliminates potential oscillations of the spool. The flow rate is unchanged. With this change, a new part number will be used. The new part can substitute the old part but the old part cannot substitute the new.

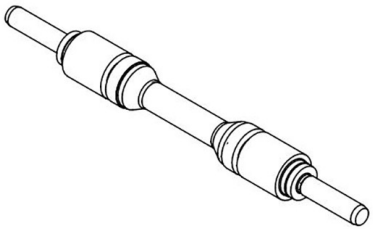

Models affected

H1B motors

Serial numbers affected

This change became effective at N-22-07-XXXXX

Part numbers affected

Description	Old part number	New part number
Loop flushing spool, H1B, 12.5 bar	11101037	11251511

Parts disposition

Interchangeable - new to old

SB-2025-006

Products affected

H1B control solenoids and components

Subject

Supplier change

Description

Danfoss has changed suppliers for the H1B control solenoids and components. With this change new part numbers have been introduced. Solenoids are interchangeable, but old components (coils, stem, etc.) are not interchangeable with new components.

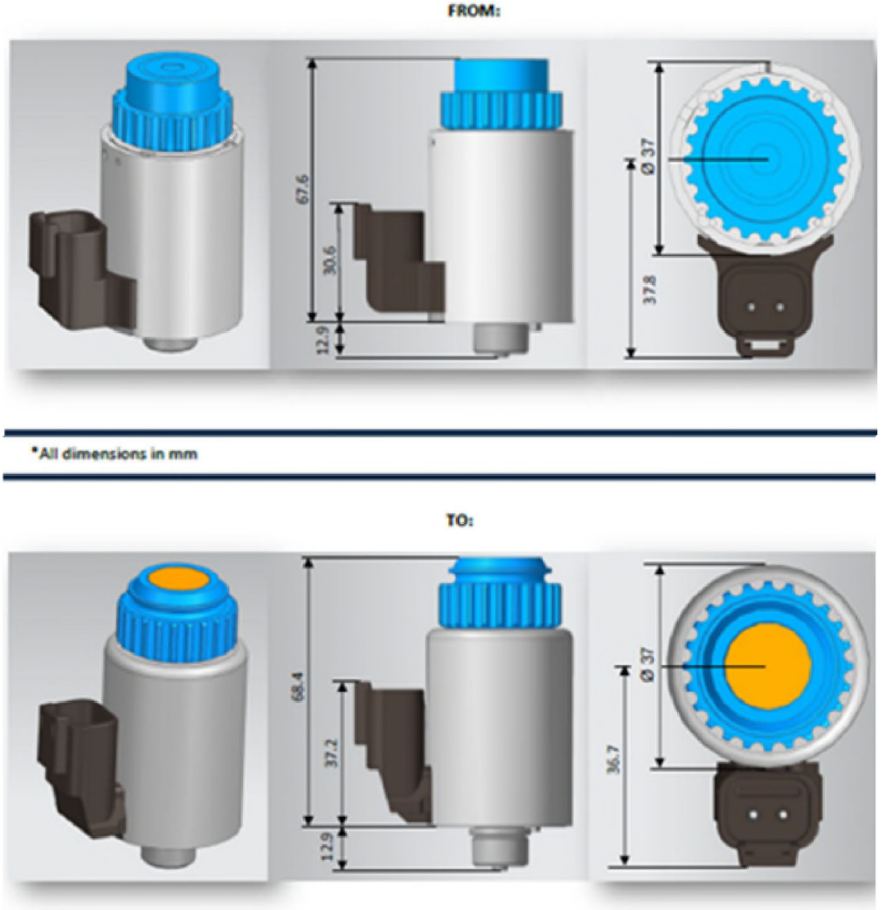

Models affected

H1B solenoids

Serial numbers affected

This change became effective at N25-41-XXX

Part numbers affected

Description	Old part number	New part number
SOLENOID-PROP-ADJ, H1B 12V DT04-2P	149053	11321071
SOLENOID-PROP-ADJ, H1B 24V DT04-2P	11002705	11321122
SOLENOID-PROP-THREAD, H1B 12V DT04-2P	11013613	11321105
SOLENOID-PROP-THREAD, H1B 24V DT04-2P	11013614	11321106
SOLENOID-ON/OFF-THREAD, H1B 12V DT04-2P	11013615	11321060
SOLENOID-ON/OFF-THREAD, H1B 24V DT04-2P	11013616	11321061
SOLENOID-PROP-ADJ, H1B 12V DT04-2P ZNNI	11259802	11321071
SOLENOID-PROP-ADJ, H1B 24V DT04-2P ZNNI	11259803	11321122
CAP-PLASTIC-SOLENOID-PROP H1B	11014185	11324081
NUT, SOLENOID 12V BLACK	11004749	11324082
NUT, SOLENOID 24V BLUE	11004750	11324057
COIL KIT, H1B PROP ADJ 24V	11031749	11324059
COIL KIT, H1B PROP ADJ 12V	11031746	11324061
COIL KIT, H1B ON/OFF 12V	11031763	11327405
COIL KIT, H1B ON/OFF 24V	11031764	11327443
COIL KIT, H1B PROP 24V	11031762	11327440
COIL KIT, H1B PROP 12V	11031751	11327441
O-RING, DHMS101 11.89x1.98 N-FKM80	85043	85043
O-RING, DHMS111 17x1.50 N-FKM80	N/A	11327429
O-RING, DHMS111 20x2.5 N-FKM80	63172	63172

Parts disposition

Interchangeable – complete solenoid

Hydro-Gear
www.hydro-gear.com

Daikin-Sauer-Danfoss
www.daikin-sauer-danfoss.com

Explore our solutions at *danfoss.com*.

Additional product literature is available at *powersource.danfoss.com*.

Danfoss
Power Solutions (US) Company
2800 East 13th Street
Ames, IA 50010, USA
Phone: +1 515 239 6000

Danfoss
Power Solutions GmbH & Co. OHG
Krokamp 35
D-24539 Neumünster, Germany
Phone: +49 4321 871 0

Danfoss
Power Solutions ApS
Nordborgvej 81
DK-6430 Nordborg, Denmark
Phone: +45 7488 2222

Danfoss
Power Solutions Trading
(Shanghai) Co., Ltd.
Building #22, No. 1000 Jin Hai Rd
Jin Qiao, Pudong New District
Shanghai, China 201206
Phone: +86 21 2080 6201

Danfoss can accept no responsibility for possible errors in catalogues, brochures and other printed material. Danfoss reserves the right to alter its products without notice. This also applies to products already on order provided that such alterations can be made without subsequent changes being necessary in specifications already agreed.
All trademarks in this material are property of the respective companies. Danfoss and the Danfoss logotype are trademarks of Danfoss A/S. All rights reserved.

© Danfoss A/S, 2026

AX152986482121en-000802