Operating Guide

VACON® 100 Enclosed Drives

VACON® 100 INDUSTRIAL, VACON® 100 FLOW



Explore our solutions
drives.danfoss.com

Contents

1 Introduction

1.1 Purpose of this Operating Guide 9
1.2 Additional Resources 9
1.3 Version History 9
1.4 Recommended Disposal 10
1.5 Approvals and Certifications 10

2 Safety

2.1 Safety Symbols 12
2.2 Safety Precautions 12
2.3 Target Group and Necessary Qualifications 16

3 Product Overview

3.1 About the Product 17
3.2 Intended Use 17
3.3 Package Label 18
3.4 Description of the Type Code 18
3.5 Enclosure Sizes 19
3.6 Options 20
3.6.1 Overview of Options and Option Codes 20
3.6.2 +CAMH, Motor Heater Control 21
3.6.3 +CACH, Cabinet Heater 21
3.6.4 +CACL, Cabinet Light 22
3.6.5 +CAPT, Auxiliary Voltage Transformer 22
3.6.6 +CAPU: Auxiliary AC Supply Terminals 22
3.6.7 +CAPD, 24 V DC Power Supply 23
3.6.8 +CAPS, AC Customer Socket 23
3.6.9 +CDLP: Signal Lights and Reset Button 23
3.6.10 +CTID: Extended I/O Terminals 24
3.6.11 +CPSO: STO with Emergency Stop Push Button on Door 24
3.6.12 +CPS1: SS1 with Emergency Stop Push Button on Door 24
3.6.13 +CPSB: Emergency Switch Off 24
3.6.14 +CPIF: Insulation Monitoring 25
3.6.15 +CFID: AC Fuses and Fuse Switch 25

3.6.16 +CICO: Input Contactor 25
3.6.17 +DBIN: Brake Chopper 25
3.6.18 +POCM: Common-mode Filter 25
3.6.19 +CHIT: Input Cabling from Top 25
3.6.20 +CHCT: Cabling from Top 25
3.6.21 +CHOT: Output Cabling from Top 25
3.6.22 +CH4L: Empty Cabinet Section, 400 mm, Left Side 26
3.6.23 +CH4R: Empty Cabinet Section, 400 mm, Right Side 26
3.6.24 +CH6L: Empty Cabinet Section, 600 mm, Left Side 26
3.6.25 +CH6R: Empty Cabinet Section, 600 mm, Right Side 26
3.6.26 +CHPH: Base Pedestal 200 mm 26
3.6.27 +CHCB: Back-channel Cooling 26
3.6.28 +IP54: IP54 26
3.6.29 +EMAR: Marine Construction 26
3.6.30 +GAUL: UL Listed 27
3.6.31 +GNUL: Not UL Listed 27

4 Receiving the Delivery

4.1 Checking the Delivery 28
4.2 The Contents of the Delivery 28
4.3 Accessories 28
4.4 Storing the Product 29
4.5 Moving the Enclosed Drive 29
4.6 Lifting the Enclosed Drive 30
4.7 Using the Product Modified Label 31

5 Mounting

5.1 Installing the Cabinet 33
5.2 Cooling and Free Space around the Drive 34
5.3 Using the Back Channel for Cooling 37
5.4 Mounting Cabinets Together, MR12 (+CICO) 39

6 Electrical Installation

6.1 Cable Connections 42
6.1.1 Main Circuit Diagrams of the Enclosed Drives 42
6.1.2 Location of the Fuses 44

Danfoss Drives Oy © 2026.11

6.1.3 Recommendations for Cable and Fuse Sizes, IEC 44
6.1.4 Recommendations for Cable and Fuse Sizes, UL 45
6.1.5 Brake Resistor Cables 45
6.2 EMC-compliant Installation Requirements 46
6.2.1 EMC-compliant Installation 46
6.2.2 Installation in a Corner-Grounded Network 47
6.3 Grounding Requirements 47
6.3.1 Grounding 47
6.3.2 Earth Fault Alarm 48
6.3.3 Compatibility with RCDs 48
6.4 Installing the Cables 49
6.4.1 Preparation of the Cable Installation 49
6.4.2 Cable Installation, MR8 50
6.4.3 Cable Installation, MR9 51
6.4.4 Cable Installation, MR10 52
6.4.5 Cable Installation, MR11 53
6.4.6 Cable Installation, MR12 54
6.4.7 Installing the Cables 55
6.4.8 Installing the Cables Between Cabinets, MR12 (+CICO) 58
6.5 Installation in an IT System 59
6.5.1 Requirements for Installation in an IT System 59
6.5.2 Removing the EMC Jumper in MR8 59
6.5.3 Removing the EMC Jumpers in MR9 61
6.5.4 Removing the EMC Jumpers in MR11 62
6.5.5 Removing the EMC Jumper in MR10 and MR12 63
6.5.6 Disconnecting the EMC Capacitors (with Brake Chopper Option) 64
6.6 Installation in a Marine Environment 64

7 Control Compartment

7.1 The Control Compartment of the Enclosed Drive 65
7.2 Control Unit Components 69
7.3 DIP Switches on the Control Unit 70
7.3.1 Selection of Terminal Functions with DIP Switches 70
7.3.2 Isolation of the Digital Inputs from Ground 71
7.4 Fieldbus Connection 72

7.4.1 Fieldbus Terminals 72
7.4.2 Internal Fieldbuses in VACON® 100 Products 73
7.4.3 Fieldbus Cabling 73
7.4.3.1 General Cabling Instructions for Fieldbus 73
7.4.3.2 Cable Routing 73
7.4.3.3 Strain Relief 75
7.4.4 Ethernet Commissioning and Cabling 75
7.4.4.1 General Cabling Instructions for Ethernet 75
7.4.4.2 Grounding the Cable Shield 75
7.4.4.3 Using Fieldbus through an Ethernet Cable 77
7.4.5 RS-485 Commissioning and Cabling 77
7.4.5.1 General Cabling Instructions for RS-485 77
7.4.5.2 Grounding the Cable Shield 78
7.4.5.3 RS-485 Bus Biasing 79
7.4.5.4 Using Fieldbus through an RS-485 Cable 79
7.5 Available Option Boards 81
7.6 Installing the Option Boards 82
7.7 Battery for the Real-time Clock (RTC) 84
7.8 Description of the Control Panel 84
7.8.1 Control Panel and the Keypad 84
7.8.2 Displays of the Control Panel 84

8 Commissioning

8.1 Safety Checks before Starting the Commissioning 86
8.2 Commissioning the Drive 87
8.3 Insulation Measurements 87
8.3.1 Measuring the Cable and Motor Insulation 87
8.3.2 Measuring the Insulation Resistance of the Motor Cable 88
8.3.3 Measuring the Insulation Resistance of the Mains Cable 88
8.3.4 Measuring the Insulation Resistance of the Motor 88
8.4 Checking the Drive after Commissioning 88

9 Maintenance

9.1 Preventive Maintenance Recommendations 90
9.2 Replacing the Air Filter of the AC Drive 92
9.3 Replacing the Fans 92

Danfoss Drives Oy © 2026.11

9.3.1 Replacing the Fan Power Supply 92
9.3.2 Replacing the Main Fan, MR8 93
9.3.3 Replacing the Main Fan, MR9 and MR11 93
9.3.4 Replacing the Door Fans, MR9B and MR11 94
9.3.5 Replacing the Main Fan Assembly, MR10 and MR12 95
9.4 Replacing the Power Unit of the Enclosed Drive 96
9.4.1 Replacing the Power Unit, MR8 96
9.4.2 Replacing the Power Unit, MR9 and MR11 98
9.4.3 Replacing the Power Unit, MR10 and MR 12 100
9.5 Downloading the Software with Mains Supply 102
9.6 Downloading the Software without Mains Supply 103

10 Specifications

10.1 Weight of the Enclosed Drive 106
10.2 Dimensions 106
10.2.1 Dimensions of the Cabinet, IEC 106
10.2.2 Dimensions of the Cabinet with Additional Cabinet Sections, IEC 109
10.2.3 Dimensions of the Cabinet, NAM 113
10.2.4 Dimensions of the Cabinet with Additional Cabinet Sections, NAM 115
10.3 Cable and Fuse Sizes 118
10.3.1 List of Cable and Fuse Size Information 118
10.3.2 Cable and Fuse Sizes, Mains Voltage 380–500 V, IEC 119
10.3.3 Cable and Fuse Sizes, Mains Voltage 525–690 V, IEC 120
10.3.4 Cable Sizes and Terminal Lugs, Mains Voltage 380–500 V, UL 121
10.3.5 Cable Sizes and Terminal Lugs, Mains Voltage 525–690 V, UL 122
10.3.6 Drive Fuses, Mains Voltage 380–500 V, IEC, Mersen 123
10.3.7 Drive Fuses, Mains Voltage 525–690 V, IEC, Mersen 123
10.3.8 Drive Fuses, Mains Voltage 380–500 V, IEC, Bussmann 124
10.3.9 Drive Fuses, Mains Voltage 525–690 V, IEC, Bussmann 125
10.3.10 Drive Fuses, Mains Voltage 380–500 V, UL, Mersen 126
10.3.11 Drive Fuses, Mains Voltage 525–690 V, UL, Mersen 126
10.4 Tightening Torques of Terminals 127
10.5 Power Ratings 127
10.5.1 List of Power Rating Information 127
10.5.2 Power Ratings of VACON® 100 INDUSTRIAL, Mains Voltage 380–500 V 128

10.5.3 Power Ratings of VACON® 100 INDUSTRIAL, Mains Voltage 525–690 V 129
10.5.4 Power Ratings of VACON® 100 FLOW, Mains Voltage 380–500 V 130
10.5.5 Power Ratings of VACON® 100 FLOW, Mains Voltage 525–690 V 130
10.6 Overload Capability 131
10.7 Brake Resistor Ratings 132
10.7.1 List of Brake Resistor Rating Information 132
10.7.2 Brake Resistance in Light Duty and Heavy Duty 132
10.7.3 Brake Resistor Cables, Mains Voltage 380–500 V 133
10.7.4 Brake Resistor Cables, Mains Voltage 525–690 V 134
10.7.5 Brake Resistor Types, Mains Voltage 380–500 V 135
10.7.6 Brake Resistor Types, Mains Voltage 525–690 V 135
10.7.7 Brake Resistance and Brake Power, Mains Voltage 380–500 V 136
10.7.8 Brake Resistance and Brake Power, Mains Voltage 525–690 V 136
10.8 Control Connections 136
10.9 Technical Data, VACON® 100 INDUSTRIAL 139
10.10 Technical Data, VACON® 100 FLOW 143

Danfoss Drives Oy © 2026.11

1 Introduction

1.1 Purpose of this Operating Guide

This operating guide provides information for safe installation and commissioning of the product. It is intended for use by qualified personnel. To use the drive safely and professionally, read and follow the instructions. Pay particular attention to the safety instructions and general warnings. Always keep this operating guide available with the product.

1.2 Additional Resources

Other resources are available to understand advanced drive functions and operation.

- *VACON® 100 INDUSTRIAL Application Guide*
- *VACON® 100 FLOW Application Guide*
- *VACON® 100 Wall-mounted Drives Operating Guide*
- *VACON® 100 IP00 Drive Modules Operating Guide*
- *VACON® 100 X Installation Manual*
- Instructions for operation with option boards and other optional equipment.

Supplementary publications and guides are available from Danfoss.

For US and Canadian markets:

NOTE! Download the English and French product guides with applicable safety, warning, and caution information from www.danfoss.com/en/service-and-support/.

REMARQUE Vous pouvez télécharger les versions anglaise et française des guides produit contenant l'ensemble des informations de sécurité, avertissements et mises en garde applicables sur le site www.danfoss.com/en/service-and-support/.

1.3 Version History

This guide is regularly reviewed and updated. All suggestions for improvement are welcome.

The original language of this guide is English.

Table 1: Version History

Version	Remarks
DPD01666C	Updated the EC declaration. Updated the Danfoss URL. Added dimensional pictures for additional cabinets. Added wiring diagrams. Update the images in the power cabling chapter. Added images in the control compartment chapter.
DPD01666D	Added information on the sine-wave filter option (+COSI).

Table 1: Version History - (continued)

Version	Remarks
DPD01666E	Added information about new enclosure sizes (MR9B and MR11), internal fieldbuses, accessories bag content, option board installation, and cabinet section options. Updated information about options, door and cabinet fans, fuses and brake resistor cables, and other technical data. Updated cUL note and type code example. Removed the EC declaration. Minor changes throughout the guide.
DPD01666F	Changed the layout and structure of the guide. Added chapters Purpose of this Operating Guide and Intended Use. Added warning about electromagnetic interference. Added specific installation instructions for MR12 with option +CICO. Added information about grounding and EMC-compliant installation. Added information about control unit components and DIP switches. Updated the Preventive Maintenance Recommendations. Updates to the Technical Data tables.

1.4 Recommended Disposal

When the product reaches the end of its service life, its primary components can be recycled.

Before the materials can be removed, the product must be disassembled. Product parts and materials can be dismantled and separated. Generally, all metals, such as steel, aluminum, copper and its alloys, and precious metals can be recycled as material. Plastics, rubber, and cardboard can be used in energy recovery. Printed circuit boards and large electrolytic capacitors with a diameter of over 2.5 cm (1 in) need further treatment according to IEC 62635 guidelines. To ease recycling, plastic parts are marked with an appropriate identification code.

Contact the local Danfoss office for further information on environmental aspects and recycling instructions for professional recyclers. End-of-life treatment must follow international and local regulations.

All products are designed and manufactured in accordance with Danfoss company guidelines on prohibited and restricted substances. A list of these substances is available at www.danfoss.com.



This symbol on the product indicates that it must not be disposed of as household waste. Do not dispose of equipment containing electrical components together with domestic waste.

It must be handed over to the applicable take-back scheme for the recycling of electrical and electronic equipment.

- Dispose of the product through channels provided for this purpose.
- Comply with all local and currently applicable laws and regulations.

1.5 Approvals and Certifications

The table shows examples of possible approvals and certifications for the VACON® drives. The specific approvals and certifications are on the product label. For more information, contact the local Danfoss office or partner.

Danfoss Drives Oy © 2026.11

Table 2: Type Approvals and Certifications

CE	ErP READY		DNV·GL
c UL us	EAC	089	BUREAU VERITAS
LR		RINA 1861	ClassNK
		ABS	20

2 Safety

2.1 Safety Symbols

The following symbols are used in Danfoss documentation and products.

⚠ DANGER

Indicates a hazardous situation which, if not avoided, will result in death or serious injury.

⚠ WARNING

Indicates a hazardous situation which, if not avoided, could result in death or serious injury.

⚠ CAUTION

Indicates a hazardous situation which, if not avoided, could result in minor or moderate injury.

NOTICE

Indicates information considered important, but not hazard-related (for example, messages relating to property damage).

	ISO warning symbol for general warnings
	ISO warning symbol for hot surfaces and burn hazard
	ISO warning symbol for high voltage and electric shock
	Symbol for indicating the required discharge time of the capacitors in the product
	ISO action symbol for referring to the instructions

2.2 Safety Precautions

⚠ DANGER



SHOCK HAZARD FROM POWER UNIT COMPONENTS

The components of the power unit are live when the drive is connected to mains. A contact with this voltage can lead to death or serious injury.

- Do not touch the components of the power unit when the drive is connected to mains.
- Before connecting the drive to mains, make sure that the covers of the drive are closed.

Danfoss Drives Oy © 2026.11

DANGER



SHOCK HAZARD FROM TERMINALS

The motor terminals U, V, and W, and the DC terminals must be treated as live when the drive is connected to mains. Contact with voltage can lead to death or serious injury.

- Do not touch the motor terminals U, V, and W, and the DC terminals when the drive is connected to mains.
- Do not work on live equipment.
- Before doing any work on internal drive components, follow proper lock out and tag out procedure.
- Before connecting the drive to mains, make sure that all covers are installed on the drive, and the cabinet doors are closed.

DANGER

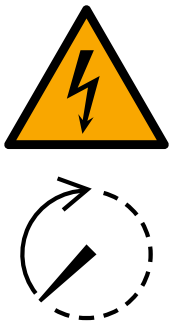

SHOCK HAZARD FROM DC LINK OR EXTERNAL SOURCE

The terminal connections and the components of the drive can be live several minutes after the drive is disconnected from the mains and the motor has stopped. The load side of the drive can also generate voltage. Contact with voltage can lead to death or serious injury.

- Do not touch the main circuit of the drive or the motor before the system is powered off and grounded.
- Disconnect the drive from the mains and ensure that the motor has stopped.
- Disconnect the motor.
- Lock out and tag out the power source to the drive.
- Ensure that no external source generates unintended voltage during work.
- Ground the drive for work.
- Wait for the capacitors to discharge fully before opening the door or the cover of the drive. Refer to the label on the drive for the correct discharge time. If the device is broken or fuses have blown, the discharge time is longer.
- Use a suitable measuring device to make sure that there is no voltage in the drive.

  Before and after the measurement, verify the correct operation of the voltage tester on a known voltage source.

  Confirm that there is no voltage between the power terminals (input, output, and DC) and ground (PE).

  Confirm that there is no voltage between the DC terminals (DC+ and DC-).

WARNING



SHOCK HAZARD FROM CONTROL TERMINALS

The control terminals can have a dangerous voltage also when the drive is disconnected from DC supply. A contact with this voltage can lead to injury.

- Make sure that there is no voltage in the control terminals before touching the control terminals.

WARNING



LEAKAGE CURRENT HAZARD

Leakage currents exceed 3.5 mA. Failure to ground the drive properly can result in death or serious injury.

- Ensure the correct grounding of the equipment by a certified electrical installer.

⚠ WARNING



SHOCK HAZARD FROM PE CONDUCTOR

The drive can cause a DC current in the PE conductor. Failure to use a residual current-operated protective device (RCD) Type B or a residual current-operated monitoring device (RCM) can lead to the RCD not providing the intended protection and therefore can result in death or serious injury.

- Use a type B RCD or RCM device on the mains side of the drive.

⚠ WARNING

ACCIDENTAL MOTOR START

When there is a power-up, a power break, or a fault reset, the motor starts immediately if the start signal is active, unless pulse control for Start/Stop logic is selected. If the parameters, the applications, or the software change, the I/O functions (including the start inputs) can change. If the auto reset function is activated, the motor starts automatically after an automatic fault reset. See the application guide. Failure to ensure that the motor, system, and any attached equipment are ready for start can result in personal injury or equipment damage.

- If an accidental start can be dangerous, disconnect the motor from the drive.
- Make sure that the equipment is safe to operate under any condition.

⚠ WARNING

ELECTROMAGNETIC INTERFERENCE

Drives and filters can produce electromagnetic interference up to 300 GHz that can affect the functionality of pacemakers and other implanted medical devices.

⚠ CAUTION

CUT HAZARD

Sharp edges in the drive can cause cuts.

- Wear protective gloves during installation, cabling, and service operations.

⚠ CAUTION



BURN HAZARD FROM HOT SURFACES

Touching surfaces, which are marked with the 'hot surface' sticker, can result in injury.

- Do not touch surfaces which are marked with the 'hot surface' sticker.

⚠ CAUTION

ACOUSTIC NOISE

Exposure to acoustic noise can cause hearing damage.

- When the acoustic noise level is >70 dB(A), use hearing protection.

Danfoss Drives Oy © 2026.11

NOTICE

DAMAGE TO THE DRIVE FROM INCORRECT MEASUREMENTS

Doing measurements on the drive when it is connected to mains can damage the drive.

- Do not do measurements when the drive is connected to mains.

NOTICE

DAMAGE TO THE DRIVE FROM INCORRECT SPARE PARTS

Using spare parts that are not from the manufacturer can damage the drive.

- Do not use spare parts that are not from the manufacturer.

NOTICE

DAMAGE TO THE DRIVE FROM INSUFFICIENT GROUNDING

Not using a grounding conductor can damage the drive.

- Make sure that the drive is always grounded with a grounding conductor that is connected to the grounding terminal that is identified with the PE symbol.

NOTICE

DAMAGE TO THE DRIVE FROM STATIC VOLTAGE

Some of the electronic components inside the drive are sensitive to ESD. Static voltage can damage the components.

- Use ESD protection when working with electronic components of the drive.
- Do not touch the components on the circuit boards without proper ESD protection.

NOTICE

DAMAGE TO THE DRIVE FROM MOVEMENT

Movement after installation can damage the drive.

- Do not move the drive during operation. Use a fixed installation to prevent damage to the drive.

NOTICE

DAMAGE TO THE DRIVE FROM INCORRECT EMC LEVEL

The EMC level requirements for the drive depend on the installation environment. An incorrect EMC level can damage the drive.

- Before connecting the drive to the mains, make sure that the EMC level of the drive is correct for the mains.

NOTICE

RADIO INTERFERENCE

This product can cause radio interference.

- Take supplementary mitigation measures.

NOTICE

MAINS DISCONNECTION DEVICE

- If the drive is used as a part of a machine, the machine manufacturer must supply a mains disconnection device (refer to EN 60204-1).

NOTICE

MALFUNCTION OF FAULT CURRENT PROTECTIVE SWITCHES

Because there are high capacitive currents in the drive, it is possible that the fault current protective switches do not operate correctly.

NOTICE

VOLTAGE WITHSTAND TESTS

Doing voltage withstand tests can damage the drive.

- Do not do voltage withstand tests on the drive. The manufacturer has already done the tests.

2.3 Target Group and Necessary Qualifications

Correct and reliable transport, storage, installation, operation, and maintenance are required for the trouble-free and safe operation of the products. Only qualified personnel are allowed to perform all related activities for these tasks. Qualified personnel are defined as properly trained staff, who are familiar with and authorized to install, commission, and maintain the equipment/systems and circuits in accordance with pertinent laws and regulations. Also, the qualified personnel must be familiar with the instructions and safety measures described in this guide and other relevant guides. Non-qualified electricians are not allowed to perform any electrical installation or troubleshooting activities.

Specialized training is required for repair. Only Danfoss authorized, qualified personnel are allowed to repair this equipment.

Danfoss Drives Oy © 2026.11

3 Product Overview

3.1 About the Product

This guide describes the VACON® 100 Enclosed Drives. The power range of the drive is 75–800 kW, and the voltage range is 380–500 V or 525–690 V. The drive comes installed in a cabinet and is available in the enclosure sizes MR8–MR12.

The drive can include 1 or more cabinets.

The drive is available in 2 regional versions:

- IEC (qualified to the IEC criteria).
- NAM (qualified to the UL criteria).

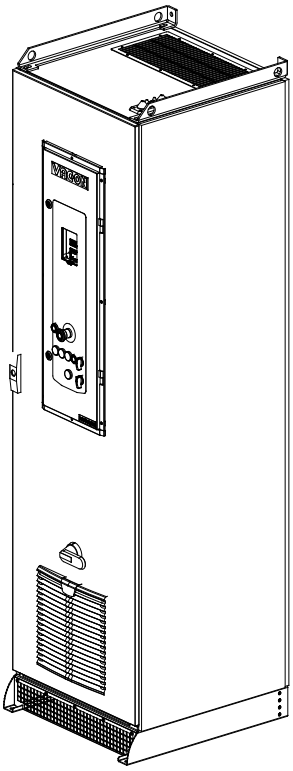

Figure 1: Example of a VACON® 100 Enclosed Drive

3.2 Intended Use

The VACON® 100 Enclosed Drive is an electronic motor controller intended for:

- Regulation of motor speed in response to system feedback or to remote commands from external controllers. A power drive system consists of the drive, the motor, and equipment driven by the motor.
- System and motor status surveillance.

The drive can also be used for motor overload protection.

VACON® 100 Enclosed Drives can be used as programmable logic controller (PLC) in many applications due to extensive I/O and fieldbus options and easy programmability. Custom application development can be done with the VACON® Programming tool and standard PLC programming languages defined in the IEC 61131/3.

Depending on the configuration, the drive can be used in standalone applications or form part of a larger appliance or installation.

The drive is allowed for use in residential, industrial, and commercial environments in accordance with local laws and standards.

NOTICE

FORESEEABLE MISUSE

- Do not use the drive in applications which are not compliant with specified operating conditions and environments. Ensure compliance with the ambient conditions specified in the *Technical Data* section.

3.3 Package Label

The package label gives detailed information about the delivery.

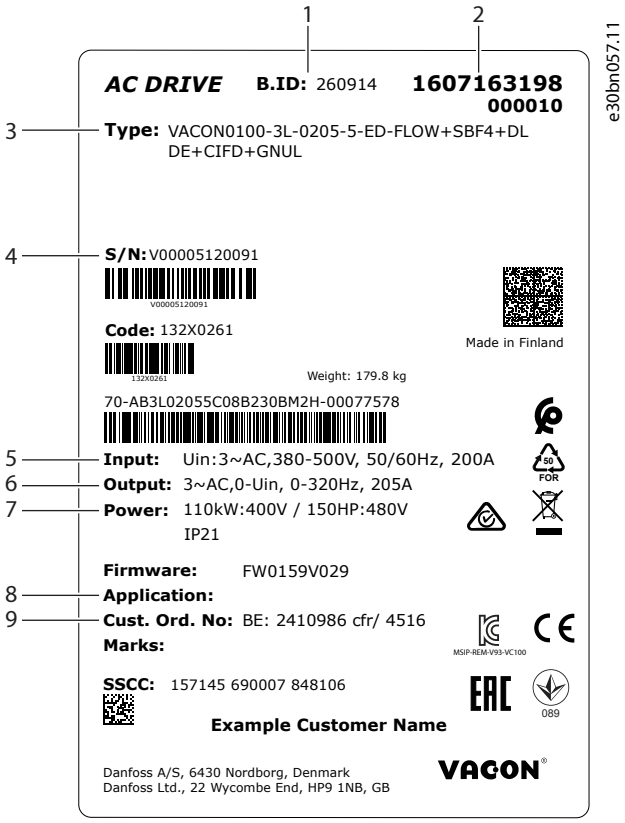

Figure 2: Example of a Package Label for VACON® 100 Enclosed Drives

1	Batch ID	2	VACON® code number
3	Type code	4	Serial number
5	Mains voltage	6	Nominal output current
7	Protection rating	8	Application code
9	Code number of the customer		

3.4 Description of the Type Code

The type code is made of standard codes and option codes. Each part of the type designation code agrees to the data in the order. The code can have this format, for example:

VACON100-3L-0385-5-ED-FLOW-R02+IP54

The option codes are described in 3.6.1 Overview of Options and Option Codes.

Danfoss Drives Oy © 2026.11

Table 3: Descriptions of Parts in the Type Code

Code	Description
VACON100	VACON100 = VACON® 100 product family
3L	Input/Function: 3L = A 3-phase input
0385	The drive rating in amperes. For example, 0385 = 385 A
5	The mains voltage: 5 = 380–500 V 7 = 525–690 V
FLOW	The product: [empty] = VACON® 100 INDUSTRIAL FLOW = VACON® 100 FLOW
ED	The drive is enclosed in an enclosure
R02	The regional code: R02 = North American market version (the product is qualified to the UL criteria)
+IP54	The option codes. There are many options, for example, +IP54 = a drive with the protection rating IP54.

The type code is on a label in the lower right corner of the control compartment door.

3.5 Enclosure Sizes

The codes for rated continuous current and nominal mains voltage are part of the type code (see 3.4 Description of the Type Code) on the package label (see 3.3 Package Label). Use these values to find out the enclosure size of the drive from the table.

In the example "VACON100-3L-0261-5-ED-FLOW-R02+IP54", the code for rated continuous current is 0261 and the code for nominal mains voltage is 5. For a list of the drive ratings, see 10.5.1 List of Power Rating Information.

In the following table, 'Model number' refers to the type code without the option codes, for example, "VACON100-3L-0261-5".

Table 4: Enclosure Sizes

Nominal mains voltage	Model number	Enclosure size
5 (380–500 V)	VACON 0100-3L-0140-5	MR8
	VACON 0100-3L-0170-5	
	VACON 0100-3L-0205-5	
	VACON 0100-3L-0261-5	MR9
	VACON 0100-3L-0310-5	
	VACON 0100-3L-0386-5	
	VACON 0100-3L-0460-5	MR10
	VACON 0100-3L-0520-5	
	VACON 0100-3L-0590-5	
	VACON 0100-3L-0651-5	MR11
	VACON 0100-3L-0731-5	
	VACON 0100-3L-0820-5	MR12
	VACON 0100-3L-0920-5	
	VACON 0100-3L-1040-5	
	VACON 0100-3L-1180-5	

Table 4: Enclosure Sizes - (continued)

Nominal mains voltage	Model number	Enclosure size
7 (525–690 V)	VACON 0100-3L-0080-7	MR8
	VACON 0100-3L-0100-7	
	VACON 0100-3L-0125-7	
	VACON 0100-3L-0144-7	MR9
	VACON 0100-3L-0170-7	
	VACON 0100-3L-0208-7	
	VACON 0100-3L-0262-7	
	VACON 0100-3L-0325-7	MR10
	VACON 0100-3L-0385-7	
	VACON 0100-3L-0416-7	MR11
	VACON 0100-3L-0461-7	
	VACON 0100-3L-0521-7	
	VACON 0100-3L-0590-7	MR12
	VACON 0100-3L-0650-7	
	VACON 0100-3L-0750-7	
	VACON 0100-3L-0820-7	

3.6 Options

3.6.1 Overview of Options and Option Codes

Table 5: Options and Option Codes

Group	Name	Code
Auxiliary equipment	Motor heater control	+CAMH
	Cabinet heater	+CACH
	Cabinet light	+CACL
Cabinet power supply for accessories	Auxiliary voltage transformer	+CAPT
	Auxiliary AC supply terminals	+CAPU
	24 V DC power supply	+CAPD
	AC customer socket	+CAPS
Door-mounted options	Signal lights and reset button	+CDLP
Control terminals	Extended I/O terminals	+CTID
Protection devices	STO with emergency stop push button on door	+CPS0
	SS1 with emergency stop push button or door	+CPS1
	Emergency switch off	+CPSB
	Insulation monitoring	+CPIF
Input devices	AC fuses and fuse switch	+CIFD
	Input contactor	+CICO(1)

Danfoss Drives Oy © 2026.11

Table 5: Options and Option Codes - (continued)

Group	Name	Code
Dynamic brake	Brake chopper	+DBIN
Output filters	Common-mode filter	+POCM
	dU/dt filter	+PODU
Cabling options	Input cabling from top	+CHIT
	Output cabling from top	+CHOT
	Cabling from top	+CHCT
Cabinet section options	Empty cabinet section, 400 mm, left side	+CH4L
	Empty cabinet section, 400 mm, right side	+CH4R
	Empty cabinet section, 600 mm, left side	+CH6L
	Empty cabinet section, 600 mm, right side	+CH6R
Base pedestal options	Base pedestal 200 mm	+CHPH
Cooling options	Back channel cooling	+CHCB
Enclosure	IP54	+IP54
Special construction	Marine construction	+EMAR(1)
Approvals	UL listed	+GAUL
	Not UL listed	+GNUL

1) Not available for the NAM versions.

3.6.2 +CAMH, Motor Heater Control

Use this option for controlling the supply for the motor anti-condensation heater. The external supply is connected to terminals -XD1.1 that are in the lower part of the cabinet. When the drive is not in Run state, the control relay, +QAM, changes the external supply to the output terminals -XDN. When the drive is in Run state, the control relay disconnects the external supply to the motor heater. To disable the function, open the MCB–FCN.

The control relay +QAM uses GND (-XD2:13) and relay R01 (-XD2:21) terminals.

Requirements: +CAPU Auxiliary AC supply terminals and +CAPD 24 V DC power supply.

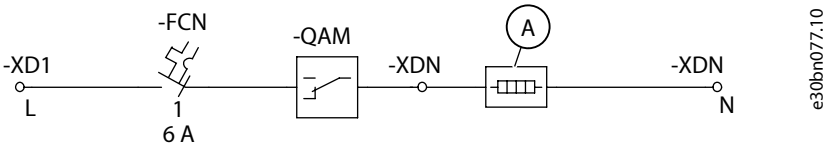

Figure 3: Wiring Diagram for the Motor Heater Control

A	The heater element is not included in the delivery

3.6.3 +CACH, Cabinet Heater

This option increases the inside temperature of the cabinet above the ambient temperature, and thus prevents condensation in the cabinet. Each cabinet has 1 cabinet heater.

The external supply is connected to terminals -XD1.1. The heater element is self-regulating. When the drive is not in Run state, the control relay, +QAM, changes the supply to the output terminals (-XD4). When the drive is in Run state, the control relay disconnects the supply to the cabinet heater. To disable the function, open the MCB –FCE.

The control relay +QAM uses the GND (-XD2:13) and relay R01 (-XD:21) terminals.

Requirements: +CAPU Auxiliary AC supply terminals and +CAPD 24 V DC power supply.

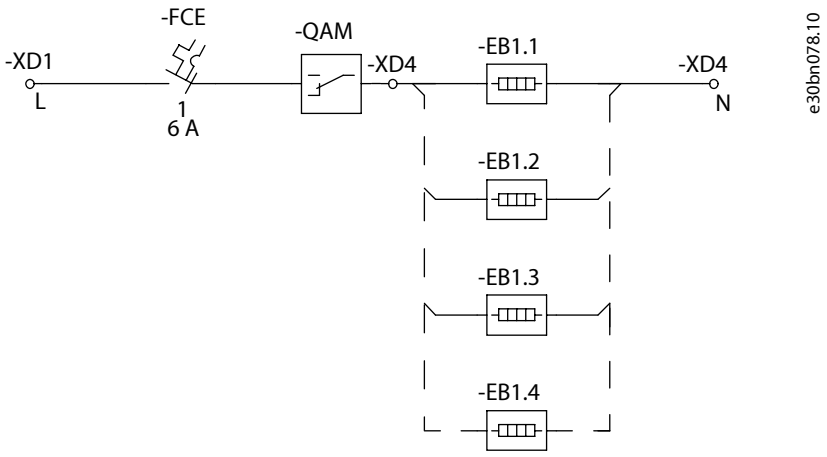

Figure 4: Wiring Diagram for the Cabin Heater

3.6.4 +CACL, Cabinet Light

With this option, the control compartment has a light as default by an internal auxiliary transformer or as an option by an external auxiliary voltage supply connected to -XD1.1.

Requirements: +CAPU Auxiliary AC supply terminals or +CAPT Auxiliary voltage transformer.

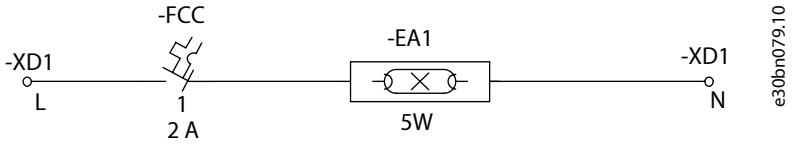

Figure 5: Wiring Diagram for the Cabinet Light

3.6.5 +CAPT, Auxiliary Voltage Transformer

This option provides the supply of auxiliary voltage for other options. The supply for the auxiliary transformer is taken from mains. If using the option AC fuses and fuse switch (+CIFD), the supply for the auxiliary voltage transformer is taken from the drive and the fuse switch. This means that the control voltage is disconnected with the main switch.

Requirements: Not +CAPU Auxiliary AC supply terminals.

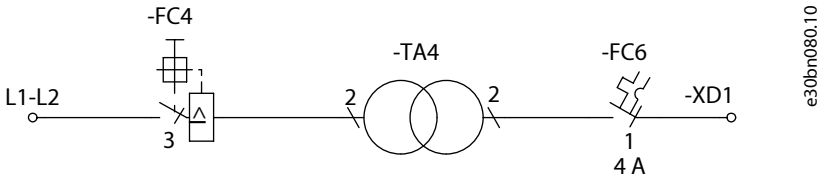

Figure 6: Wiring Diagram for the Auxiliary Voltage Transformer

3.6.6 +CAPU: Auxiliary AC Supply Terminals

This option provides terminals -XD1.1 for an external voltage supply. The external supply must be short-circuit protected. The power of this supply depends on other selected cabinet options.

Requirements: Not +CAPT Auxiliary voltage transformer.

Danfoss Drives Oy © 2026.11

DANGER



SHOCK HAZARD FROM AUXILIARY VOLTAGE

If auxiliary voltage is supplied externally, the main switch does not disconnect it. Contact with this voltage can cause death or serious injury.

- Make sure that the external auxiliary voltage is disconnected before opening the cabinet.
- Use a measuring device to make sure that no voltage is present.



Figure 7: Wiring Diagram for Auxiliary AC Supply Terminals

3.6.7 +CAPD, 24 V DC Power Supply

This option provides a backup supply for the control unit of the drive. The option can also be used for other auxiliary options for which a 24 V DC supply is required.

The +24 V DC voltage is supplied to the GND (-XD2:20) and + V_{in}(-XD2:30) terminals.

Requirements: +CAPU Auxiliary AC supply terminals or +CAPT Auxiliary voltage transformer. The backup supply for the control unit requires +CAPU Auxiliary AC supply terminals, as, for +CAPU, the power is not switched off with the main switch.

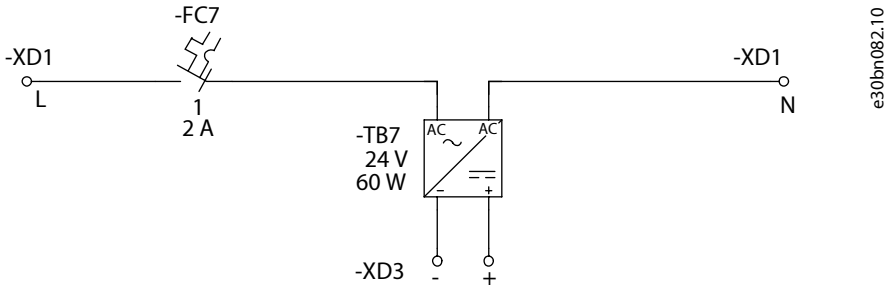

Figure 8: Wiring Diagram for the 24 V DC Power Supply

3.6.8 +CAPS, AC Customer Socket

The socket provides a power supply for measurement equipment, tools, or computer. The type of the socket is CEE 7/3 ("Schuko", Type F) or NEMA 5–15 grounded (Type B).

The default voltage is 230 V AC and 115 V AC in the North American variant. The maximum output power with 230 V AC is 450 VA. With 115 V AC, it is 230 VA when an external supply (+CAPU) is used, and 180 VA when a transformer supply (+CAPT) is used.

Requirements: +CAPU Auxiliary AC supply terminals or +CAPT Auxiliary voltage transformer.

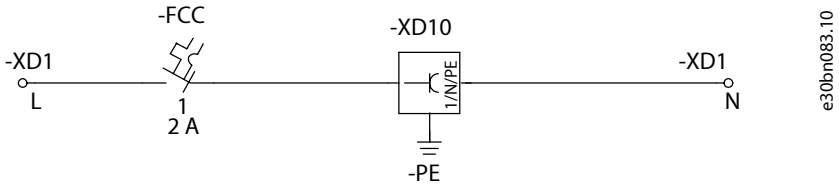

Figure 9: Wiring Diagram for the AC Customer Socket

3.6.9 +CDLP: Signal Lights and Reset Button

This option includes signal lights on the control compartment door for Ready, Run, and Fault states of the drive. The door also has a button for the reset function of the AC drive. The Ready signal light is not available when using the optional relay board OPTF4.

The relay board OPTF3 uses the digital input 6 (-XD2:16) and the relays RO1 (-XD2:23), RO2 (-XD2:26), and RO3 (-XD2:33).

Requirements:

- +CAPD 24 V DC power supply
- +CAPU Auxiliary AC supply terminals or +CAPT Auxiliary voltage transformer.

3.6.10 +CTID: Extended I/O Terminals

The option includes 20 control terminals (-XDW) in the control compartment for free use.

There are no requirements for this option.

3.6.11 +CPSO: STO with Emergency Stop Push Button on Door

This option provides the STO (Safe Torque Off) function with the OPTBJ option board and an emergency stop push button on the door of the control compartment. The STOP Channel 1 and STO Channel 2 are wired to the emergency stop push button. The STO function corresponds to an emergency stop category 0. See the user guide of the OPTBJ option board for the regulations and their certified safety functions.

Requirements:

- OPTBJ option board
- +CAPD 24 V DC power supply
- +CAPU Auxiliary AC supply terminals or +CAPT Auxiliary voltage transformer.

3.6.12 +CPS1: SS1 with Emergency Stop Push Button on Door

This option provides the SS1 (Safe Stop 1) function with the OPTBJ option board, a safety relay, and an emergency stop push button on the control compartment door. Pushing the emergency stop button activates the motor deceleration and makes the motor stop in the set deceleration ramp time. The STO Channel 1 and STO Channel 2 are wired to the safety relay that activates the STO function after the set delay. See the user guide for the OPTBJ option board and the safety relay for the regulations and the certified safety functions.

This option uses the digital input 5 (-XD2:15).

Requirements:

- OPTBJ option board
- +CAPD 24 V DC power supply
- +CAPU Auxiliary AC supply terminals or +CAPT Auxiliary voltage transformer.

⚠ CAUTION

RISK OF EQUIPMENT DAMAGE

The delay of the safety relay is process/machine-dependent. An incorrect delay can damage the equipment.

- The designer and user of the system are responsible for understanding and setting the delay of the safety relay.

3.6.13 +CPSB: Emergency Switch Off

The emergency switch-off function uses an input contactor to disconnect the drive from mains. Pushing the emergency stop push button on the control compartment door opens the control circuit of the input contactor.

Requirements:

- +CICO Input contactor and +CFID AC fuses and fuse switch.
- +CAPU Auxiliary AC supply terminals or +CAPT Auxiliary voltage transformer.

Danfoss Drives Oy © 2026.11

3.6.14 +CPIF: Insulation Monitoring

With this option, it is possible to monitor the insulation level in an IT supply network with an insulation monitor in the control compartment. The insulation monitor supervises the supply and the insulation faults in the output network.

Requirements:

- +CAPD 24 V DC power supply
- +CAPU Auxiliary AC supply terminals or +CAPT Auxiliary voltage transformer.

3.6.15 +CFID: AC Fuses and Fuse Switch

Use this option to isolate the drive safely from the mains with a fuse switch that is located directly below the power unit.

With the enclosure size MR12 and the input contactor +CICO, the fuse switches are in the additional cabinet section. A thermostat provides overtemperature protection for the fuse switches. When the temperature limit of the thermostat is reached, a safety circuit opens, and an external fault occurs. The function uses terminals +24 V_{out} (-XD2:12) and digital input (-XD2:14).

The wiring of the option is in 6.1.1 Main Circuit Diagrams of the Enclosed Drives.

3.6.16 +CICO: Input Contactor

This option enables connecting to or disconnecting from mains. Use a control switch on the control compartment door or connect an external switch to terminals -CD0. To connect the external switch, refer to the electrical drawings.

The option includes the fuse switch (+CIFD) for safety reasons.

For enclosure sizes MR10 with minimum 416 A and MR12 with minimum 820 A, the option includes additional cabinet sections.

The wiring of the option is shown in 6.1.1 Main Circuit Diagrams of the Enclosed Drives.

Requirements:

- +CAPU Auxiliary AC supply terminals or +CAPT Auxiliary voltage transformer.

3.6.17 +DBIN: Brake Chopper

The power unit has a dynamic brake chopper. The external brake resistor is connected directly to the brake resistor terminals of the power unit. The brake resistor is not included in the option.

3.6.18 +POCM: Common-mode Filter

The option includes an output filter that decreases the common-mode voltage. The filter is connected between the motor terminals of the power unit and the motor terminals of the drive. The filter does not affect the connection of the external motor cables.

The wiring of the option is shown in 6.1.1 Main Circuit Diagrams of the Enclosed Drives.

3.6.19 +CHIT: Input Cabling from Top

This option enables mains cables entry from the top of the cabinet.

The option includes an additional cabinet section.

3.6.20 +CHCT: Cabling from Top

This option enables cable entry from the top of the cabinet.

The option includes an additional cabinet section.

3.6.21 +CHOT: Output Cabling from Top

This option enables motor cable entry from the top of the cabinet.

This option includes an additional cabinet section.

Table 6: Input/Output Terminals in the Additional Cabinet Section

Enclosure size	With +CHIT, +CHOT, +CHCT	With +CICO, +CHOT, +CHCT
MR8	–	–
MR9	–	–
MR10, maximum 385 A	–	–
MR10, minimum 416 A	✓	✓(1)
MR11	✓	✓
MR12, maximum 750 A	✓	✓
MR12, minimum 820 A	✓	✓(1)

1) Input terminals at fuse switch (IEC only)

3.6.22 +CH4L: Empty Cabinet Section, 400 mm, Left Side

This option includes an additional cabinet section (400 mm) on the left side of the main cabinet,

3.6.23 +CH4R: Empty Cabinet Section, 400 mm, Right Side

The option includes an additional cabinet section (400 mm) on the right side of the main cabinet.

3.6.24 +CH6L: Empty Cabinet Section, 600 mm, Left Side

The option includes an additional cabinet section (600 mm) on the left side of the main cabinet.

3.6.25 +CH6R: Empty Cabinet Section, 600 mm, Right Side

The option includes an additional cabinet section (600 mm) on the right side of the main cabinet.

3.6.26 +CHPH: Base Pedestal 200 mm

The option includes a 200 mm pedestal as an alternative to the standard 100 mm pedestal.

3.6.27 +CHCB: Back-channel Cooling

Refer to chapter 5.3 Using the Back Channel for Cooling.

Requirements:

- +CACH Cabinet heater
- +CAPU Auxiliary AC supply terminals
- +IP54 IP54

3.6.28 +IP54: IP54

This option provides enclosure protection class IP54 for the drive.

3.6.29 +EMAR: Marine Construction

See more information in the *VACON® 100 Marine Installation Guide*.

Requirements:

- +IP54 IP54
- +CACH Cabinet heater
- Do not use with +CHCB back-channel cooling

Danfoss Drives Oy © 2026.11

3.6.30 +GAUL: UL Listed

To order a drive qualified to the UL criteria, select this option.

3.6.31 +GNUL: Not UL Listed

With this option, the ordered drive is not qualified to the UL criteria.

4 Receiving the Delivery

4.1 Checking the Delivery

1. After removing the packaging, examine the drive for transport damages.
   a. If the drive was damaged during the shipping, speak to the cargo insurance company or the carrier.
2. To make sure that the delivery is correct, compare the order data to the data on the package label. See 3.3 Package Label.
   a. If the delivery does not agree with the order, speak to the vendor immediately.
3. To make sure that the contents of the delivery is correct and complete, compare the type code of the product to the type code. See 3.4 Description of the Type Code.
4. Check that the accessories bag contains the items listed in 4.3 Accessories.

   These accessories are part of the electrical installation. The contents of the accessories bag are different for different enclosure sizes and protection ratings.

5. Check that the content of the delivery contains the items listed in 4.2 The Contents of the Delivery.

4.2 The Contents of the Delivery

The contents of the delivery:

- The enclosed drive
- An accessory bag
- Optional: Printed operating guide, application guide, and guides relevant for any options ordered
- Order-specific documents (on the inside of the control compartment door)

4.3 Accessories

The accessories bag is included in the deliveries of all enclosure sizes.

Table 7: Contents of the Accessories Bag

Item	Quantity	Description
Grounding lamella	3	Grounding clamp for control cable
M4x16 screw	3	Screws for connecting the grounding clamp
Hose clamp	8	Clamps for IP54 sealing of cable grommets
Pedestal mounting bracket	1	Drive cabinet fixing (back side)
"Product modified" label	1	Data about changes
M10x40 hexagon screw	6	Power cabling of enclosures MR8 and MR9
M10 conical washer nut	9	Power cabling of enclosures MR8 and MR9
M10 sesko washer	15	Power cabling of enclosures MR8 and MR9.

The MR10 accessories bag is included in the deliveries of enclosure sized MR10 and MR12.

Table 8: Contents of the MR10 Accessories Bag

Item	Quantity	Description
Grounding lamella	3	Grounding clamp for control cable
M4x16 screw	3	Screws for connecting the grounding clamp

Danfoss Drives Oy © 2026.11

Table 8: Contents of the MR10 Accessories Bag - (continued)

Item	Quantity	Description
M8 hexagon nut	2	PE grounding
M8 conical spring washer	2	PE grounding
M8 sesko washer	2	PE grounding
"Product modified" label	1	Data about changes
Connector bolt holder	9	Cabling with 3 wires
Connection brush	6	Cabling with 3 wires
M12x70 hexagon screw	9	Cabling with 3 wires
M12 conical spring washer	9	Cabling with 3 wires
M12 sesko washer	9	Cabling with 3 wires
M12 hexagon nut	9	Cabling with 3 wires

4.4 Storing the Product

If the product has to be stored before installing it, follow these instructions.

1. If the drive must be stored before using it, make sure that the ambient conditions agree to the following:
   - Storage temperature: -40…+70 °C (-40...+158 °F)
   - Relative humidity: 0–95%, no condensation
2. If the drive must be kept in storage for a more than 2 months, keep it in controlled conditions.
   a. Make sure that the temperature variation is small.
   b. Make sure that the humidity is less than 50%.

4.5 Moving the Enclosed Drive

The enclosed drive is delivered horizontally or vertically on a wooden pallet. Most enclosure sizes of the drive include additional cabinet selections when ordering any of the 3 cabling-from-top options (+CHIT, +CHOT, or +CHCT) or the input contactor (+CICO). The products are delivered with all the cabinets attached together, except for MR12 if it is ordered with the +CICO option.

IMPORTANT: Do not remove the package material before installing the drive.

1. Place the drive on a level base.
2. Move the drive into the vertical position.
3. Use a hoist to move the drive.

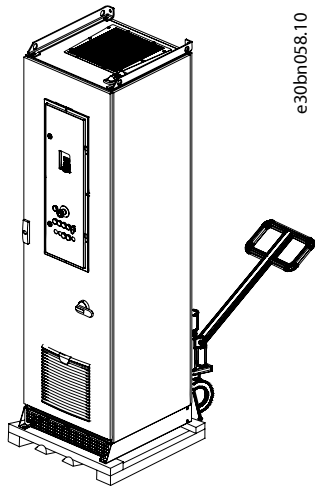

4. If moving a drive with more than 1 cabinet, use rollers.

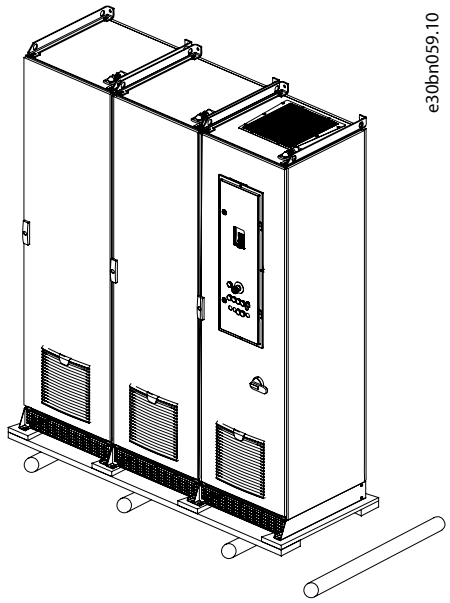

4.6 Lifting the Enclosed Drive

⚠ WARNING

LIFTING HEAVY LOAD

Not following the safe lifting instructions can result in death or serious injury and damage to the equipment.

- Follow the lifting and moving instructions and the local safety regulations on lifting.
- Use a lifting device that is in proper working condition and appropriate for the weight of the load.
- If the package must be lifted manually, follow local safety regulations and make sure that the number of lifting personnel is such that the weight limit per lifter is not exceeded.
- Check the weight of the drive. The weight is provided on the outside of the shipping box.
- Test lift the load to verify the proper center of gravity. Reposition the lifting point if not level.
- Do not walk under, or place any part of your body under a suspended load.

1. Remove the drive from the package.

Danfoss Drives Oy © 2026.11

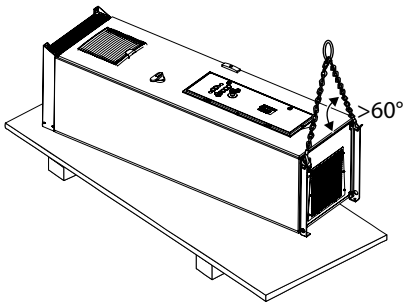

2. Use a lifting device that is sufficiently strong for the weight of the drive.
3. Place the lifting hooks in the holes on the top of the cabinet.

> IMPORTANT: To divide the weight of the drive equally, and to avoid damage to the equipment, always use 4 lifting holes.

4. Ensure that the minimum angle between the drive and the chain is 60°.
5. Lift the drive into a vertical position.

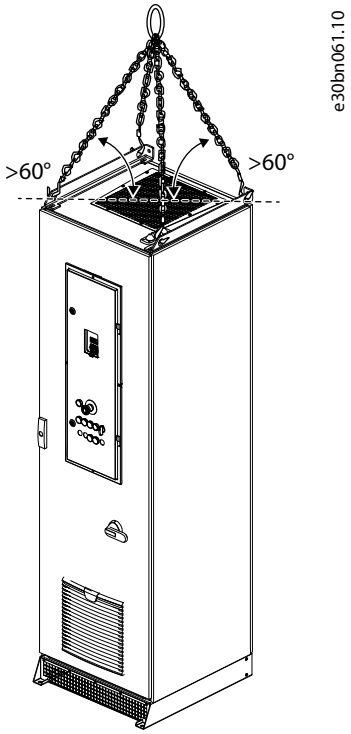

4.7 Using the Product Modified Label

In the accessories bag, there is also a "product modified" label. The function of the label is to tell the service personnel about the changes that are made to the product.

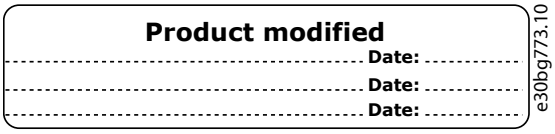

Figure 10: The Product Modified Label

1. Attach the label on the side of the product, in a place where it is easy to find.
   a. Attach the label, for example, next to the other labels on the product.
2. If changes are made to the product, write the change and date on the label.

Danfoss Drives Oy © 2026.11

5 Mounting

5.1 Installing the Cabinet

IMPORTANT: If multiple additional cabinet sections are ordered, perform the following steps for each section.

IMPORTANT: For the enclosure size MR12 (>730 A) with +CICO option, the additional cabinet section has a door fan to cool down components. The fan is supplied with 230 V AC from the control compartment when the drive is powered up. Fan supervision is provided by a thermostat installed in the additional cabinet section. If the temperature of the additional cabinet section exceeds the preset limit, an external fault is activated. If the external fault occurs, check the additional cabinet section fan and ambient temperature. The fault can be reset after the additional cabinet section air temperature cools down.

IMPORTANT: The drive is delivered with all the cabinets attached together, except for MR12 with the +CICO option. To mount the cabinets together, see the instructions in 5.4 Mounting Cabinets Together, MR12 (+CICO).

1. Install the drive in a vertical position on level ground.

   Make sure that the installation surface is strong enough to hold the drive.

2. Attach the drive with screws to the wall and/or floor in 1 of the following ways:
   - Use the 4 mounting holes at the bottom of the cabinet.
   - Use the 2 mounting holes at the front bottom and the 2 mounting holes at the rear top of the cabinet.
   - Use the 2 mounting holes in the mounting bracket and the 2 mounting holes at the front bottom of the cabinet. To use the mounting bracket, first attach it to the floor. Slide the edge of the cabinet pedestal under the mounting bracket. Then attach the 2 mounting holes at the front bottom.

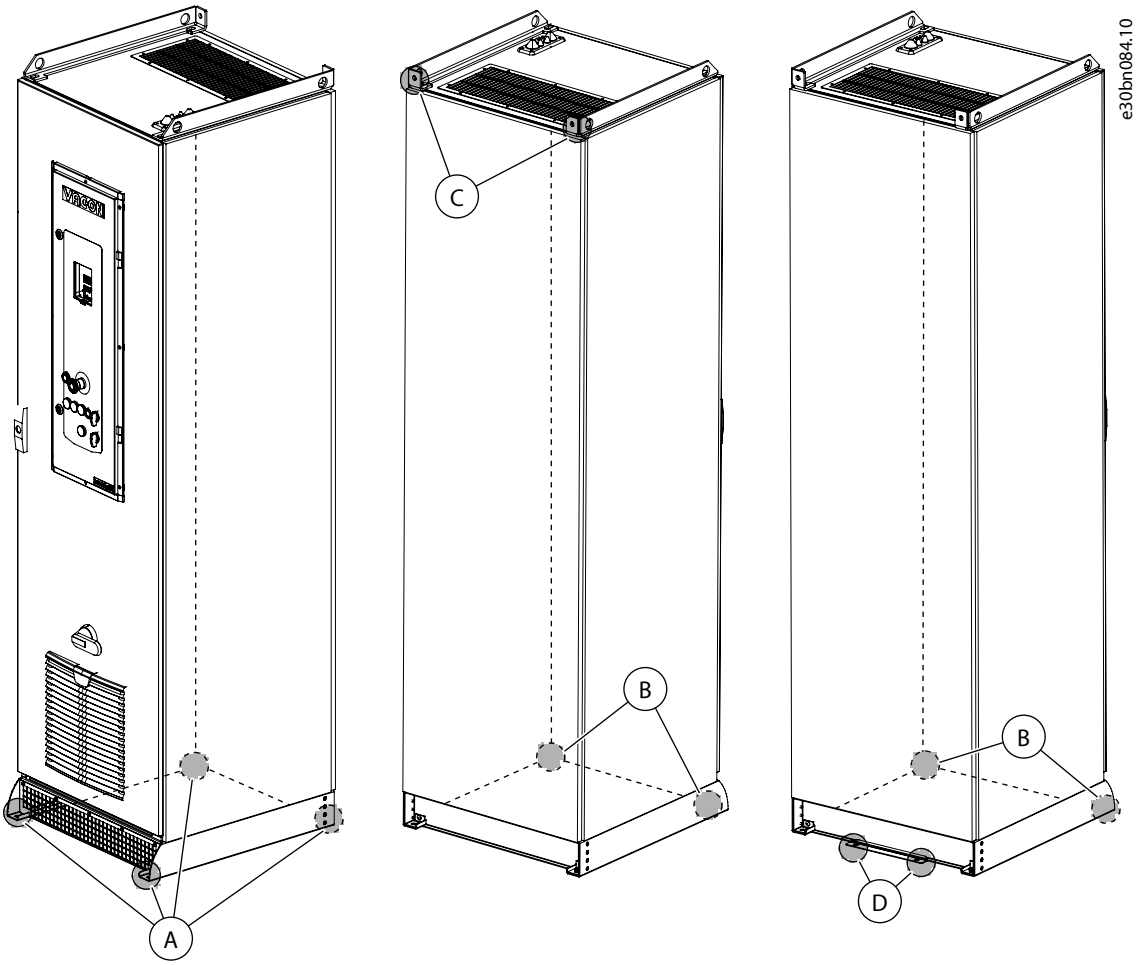

Figure 11: Mounting Holes of the Cabinet

A	The 4 mounting holes at the bottom	B	The 2 mounting holes at the front bottom
C	The 2 mounting holes at the rear top	D	The 2 mounting holes in the mounting bracket

5.2 Cooling and Free Space around the Drive

The cabinet fan is controlled by the control unit relay RO1. When the drive is not running, the fan is stopped. When the drive runs, the fan rotates. A thermostat monitors the internal temperature of the cabinet. If the internal temperature of the cabinet exceeds the limit, the safety circuit opens, and an external fault appears. Overtemperature can be caused by, for example, a failed fan, a clogged filter, or high ambient temperature. Overheat reduces the lifetime of the drive components and can cause damage.

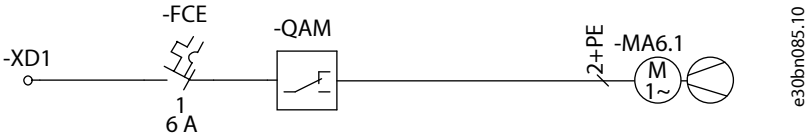

Figure 12: The Cabinet Fan in MR9B

Danfoss Drives Oy © 2026.11

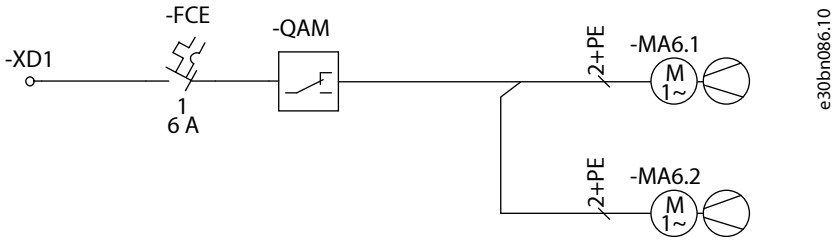

Figure 13: The Cabinet Fan in MR11



Figure 14: The Cabinet Fan in MR12

The drive produces heat in operation. The fan circulates air and decreases the temperature of the drive. Make sure that there is sufficiently free space around the drive.

A minimum of 80 cm (31.5 in) are required for opening the cabinet door and for accessing the drive for maintenance. Side by side installation is possible when there are several drives.

Ensure that the temperature of the cooling air does no exceed the maximum or minimum ambient operating temperatures of the drive.

For the air to move freely and efficiently through the cabinet of the drive, make sure that there is at least 30 cm (12 in) of space above the cabinet without obstacles to stop the airflow. Ensure that hot air going out of the cabinet does not reenter the cabinet.

The power loss of the drive can change significantly, when the load, the output frequency, or the switching frequency changes. Knowing the power loss helps when planning cooling equipment in an electrical room. Use the following formula to calculate the approximate power loss of the drive in nominal conditions:

P_{loss} [kW] = P_{mot} [kW] x 0.025

Having options in the cabinet can lead to an increase of 0–0.5% in the lower poss. Some options, for example, output filter and input devices, cause more power losses.

To calculate the power loss, use the MyDrive® Energy tool on www.danfoss.com.

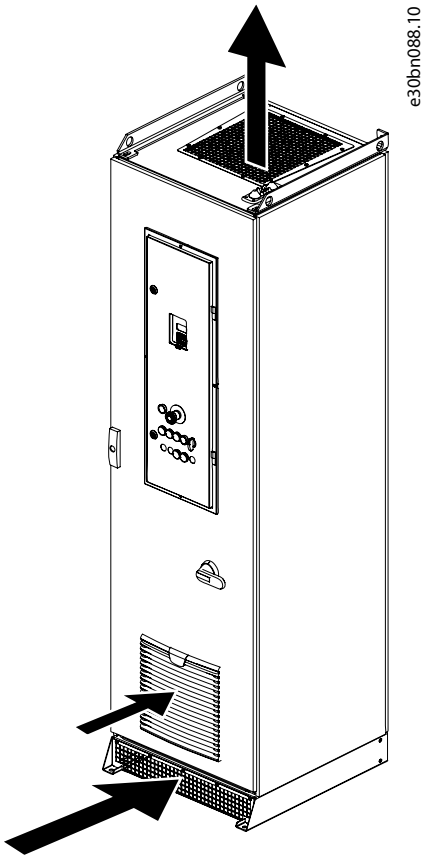

Figure 15: Circulation of Cooling Air

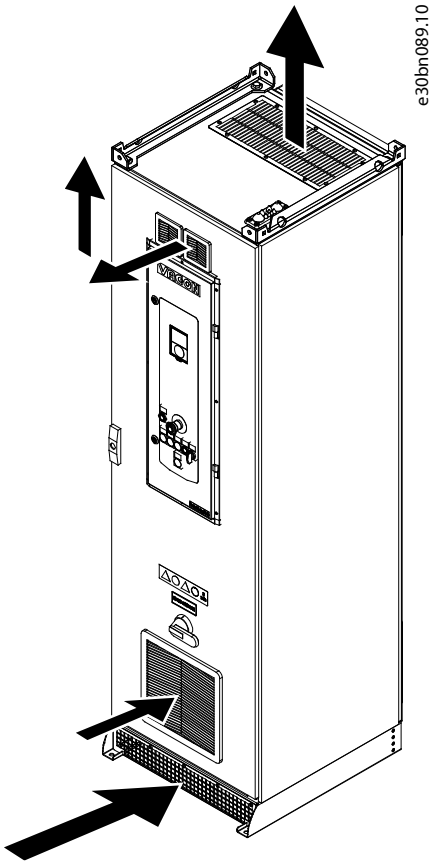

Figure 16: Circulation of Cooling Air in MR9B and MR11

Danfoss Drives Oy © 2026.11

Table 9: Required Quantity of Cooling Air

Enclosure size	Quantity of cooling air [m^3/h]
MR8	330
MR9	620
MR10	1400
MR11	2 x 620
MR12	2 x 1400

5.3 Using the Back Channel for Cooling

The back-channel cooling option (+CHCB) can be used for cooling of the drive. This option takes the intake air to the main cooling channel of the drive from the outside of the electrical room and exhausts the air back to the outside of the electrical room. Because the heat losses of the drive are directed outside, the cooling load of the electrical room is reduced.

1. Make an opening in the wall behind the cabinet.
2. To avoid condensation in the cabinet, connect the supply cable of the cabinet heater (+CACH, delivered as default with this option) to the correct terminals in the control compartment.
3. Attach the duct adapter flanges to the cabinet with screws.

IMPORTANT: Do not install the cabinet in an airtight space. Approximately 5–10% of the intake air must come from the front.

IMPORTANT: MR8 does not take in air from the front.

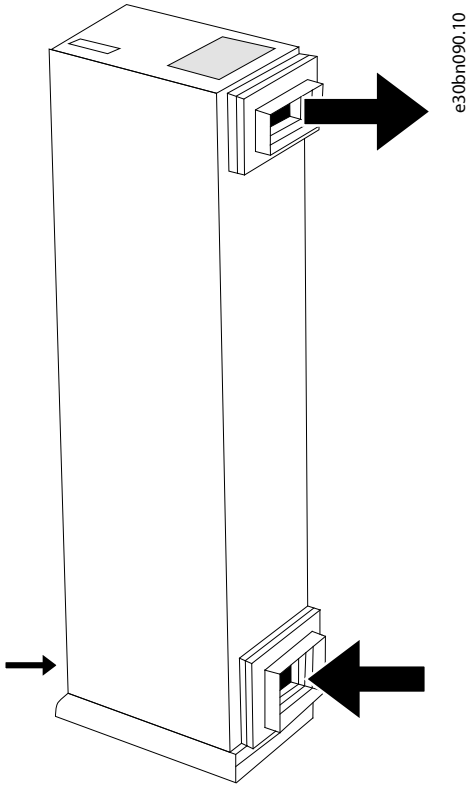

Figure 17: Airflow

Table 10: Estimated Amount of Intake Air

Enclosure size	Amount of intake air [m^3]
MR8	0
MR9	10
MR10	20
MR11	20
MR12	40

4. Make sure that there are no particles in the air that can block the heat sink.
5. Move the cabinet next to the wall or attach the duct adapter flanges to the air duct.

> IMPORTANT: Do not make attachments to other part of the drive except for the flanges shown in Figure 17.

6. Seal the openings correctly.

⚠ CAUTION

DECREASE IN PERFORMANCE

Long air ducts combined with the duct adapter flanges can cause back pressure, which decreases drive performance.

- Use a duct fan or equivalent if both long air ducts and duct adapter flanges are used.

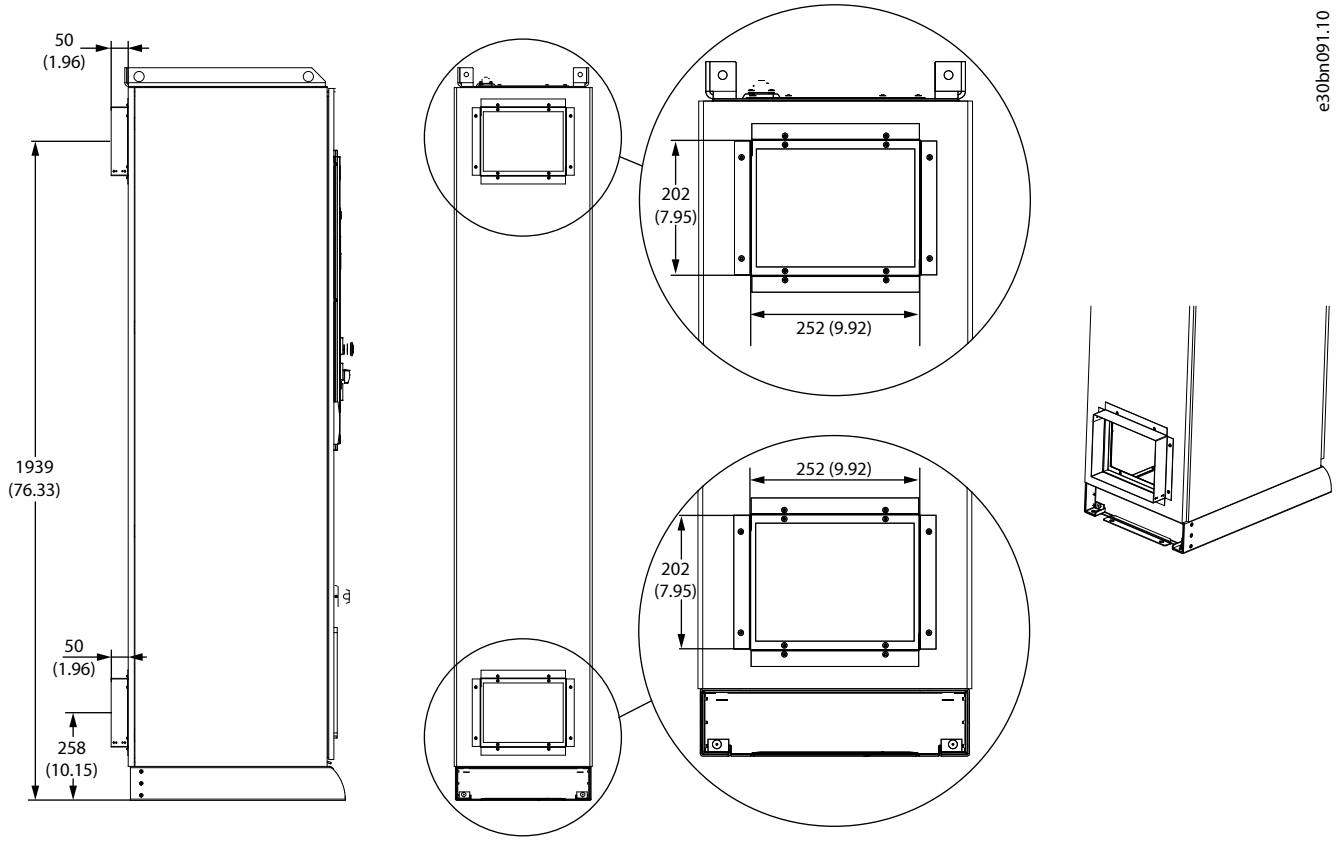

Figure 18: Dimensions for Back-channel Cooling, MR8

Danfoss Drives Oy © 2026.11

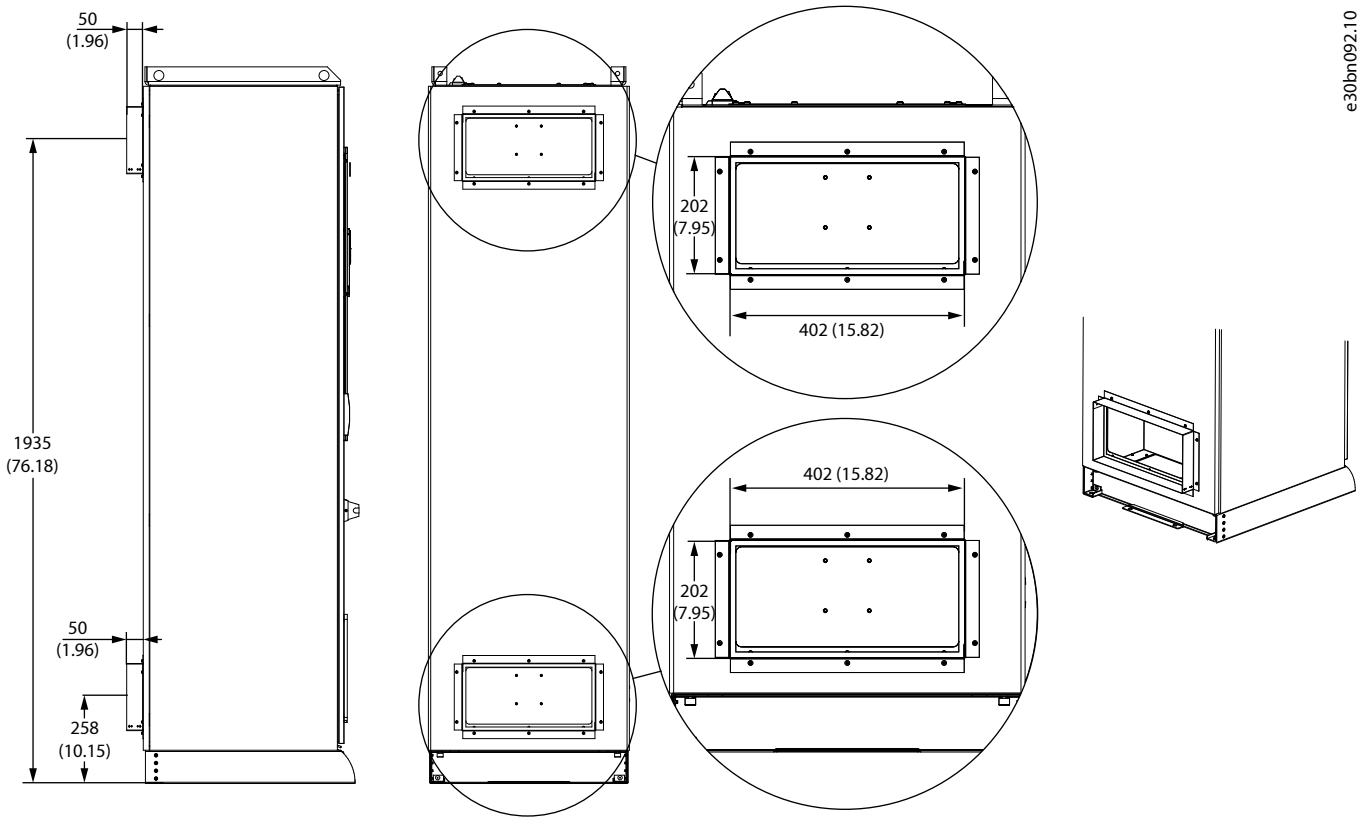

Figure 19: Dimensions for Back-channel Cooling, MR9 and MR10

The additional cabinet sections do not need back channels.

In MR11 and MR12, there are 2 back channels.

5.4 Mounting Cabinets Together, MR12 (+CICO)

All necessary screws and bolts are provided in the delivery.

1. Place the cabinets side by side. Make sure that the cabinets are in the right order.
2. Attach the cabinets to each other with 6 brackets, 3 in the front and 3 at the back of the cabinet.

The brackets are already attached into the drive cabinet. Attach the brackets also to the +CICO cabinet with screws.

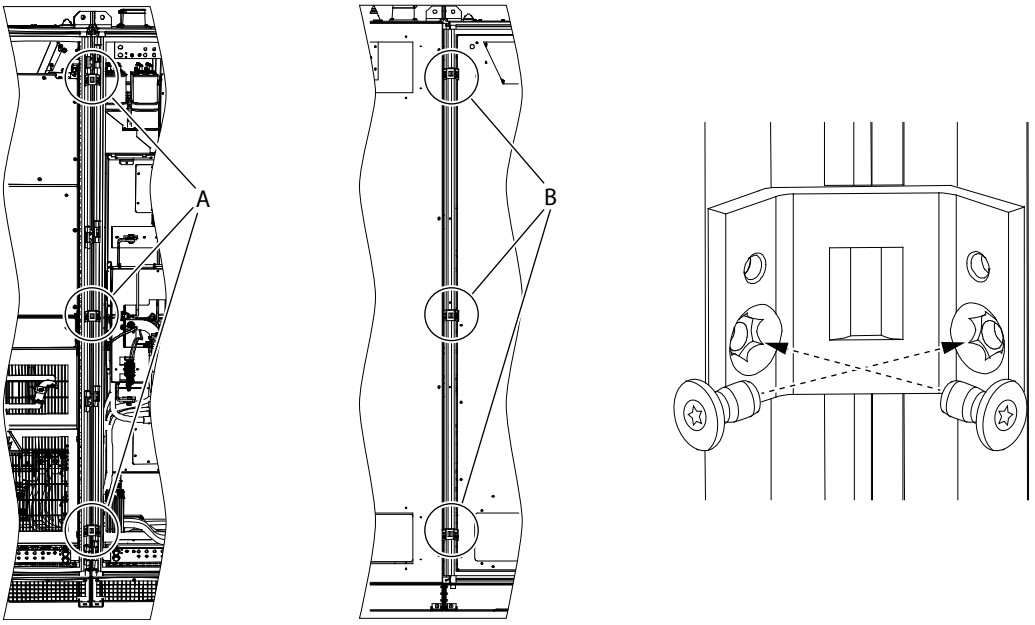

Figure 20: Mounting Brackets

A	Mounting brackets in the front of the cabinet.	B	Mounting brackets at the back of the cabinet.

3. Attach the lifting holes of the cabinets into each other with screws.

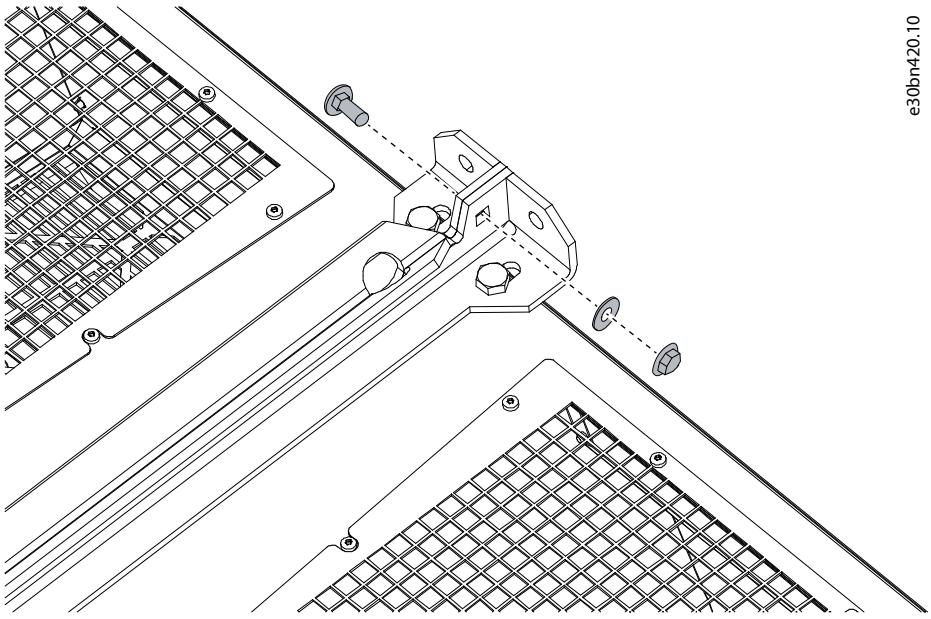

Figure 21: Attaching the Lifting Holes

4. Join the PE busbars of the cabinets with an extension piece and attach it with screws.

Danfoss Drives Oy © 2026.11

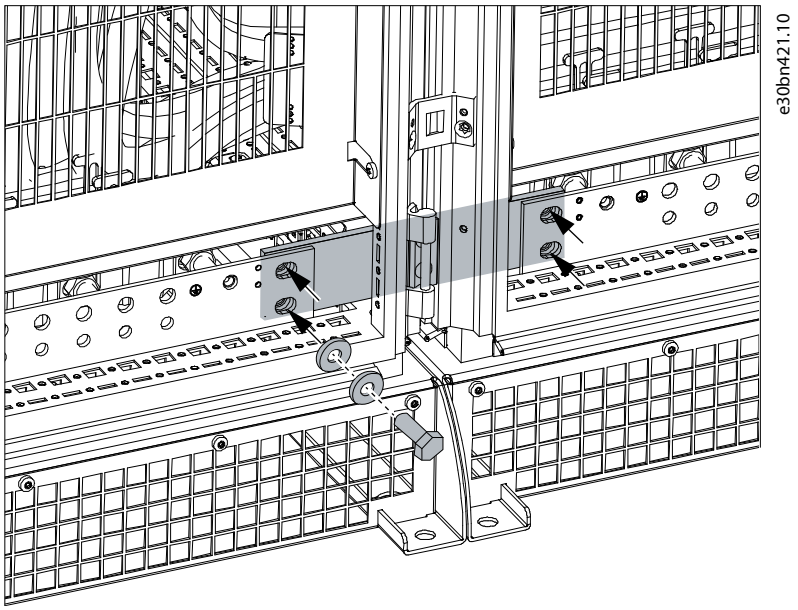

Figure 22: Connecting the PE Busbars

5. When the cabinets are mounted together, connect the cabling between the cabinets. See the instructions in 6.4.8 Installing the Cables Between Cabinets, MR12 (+CICO).

6 Electrical Installation

6.1 Cable Connections

6.1.1 Main Circuit Diagrams of the Enclosed Drives

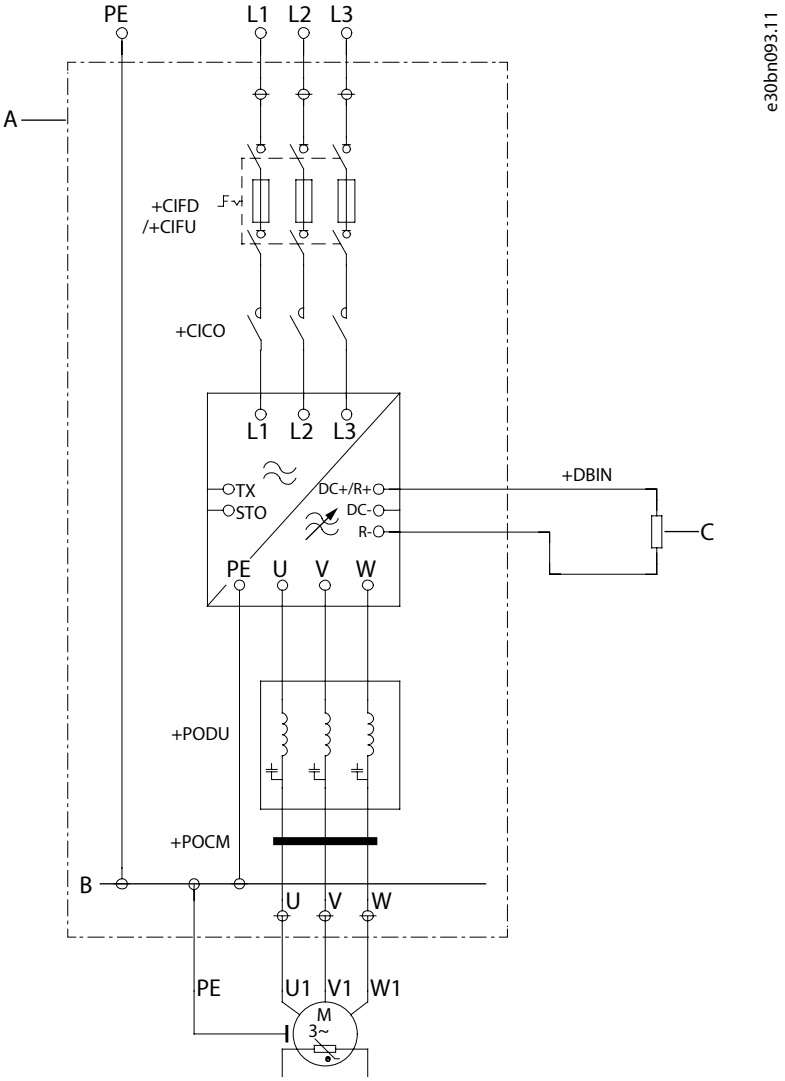

Figure 23: Main Circuit Wiring Diagram, MR8–MR10

A	Cabinet	B	PE bus
C	Brake resistor (not included in delivery)		

Danfoss Drives Oy © 2026.11

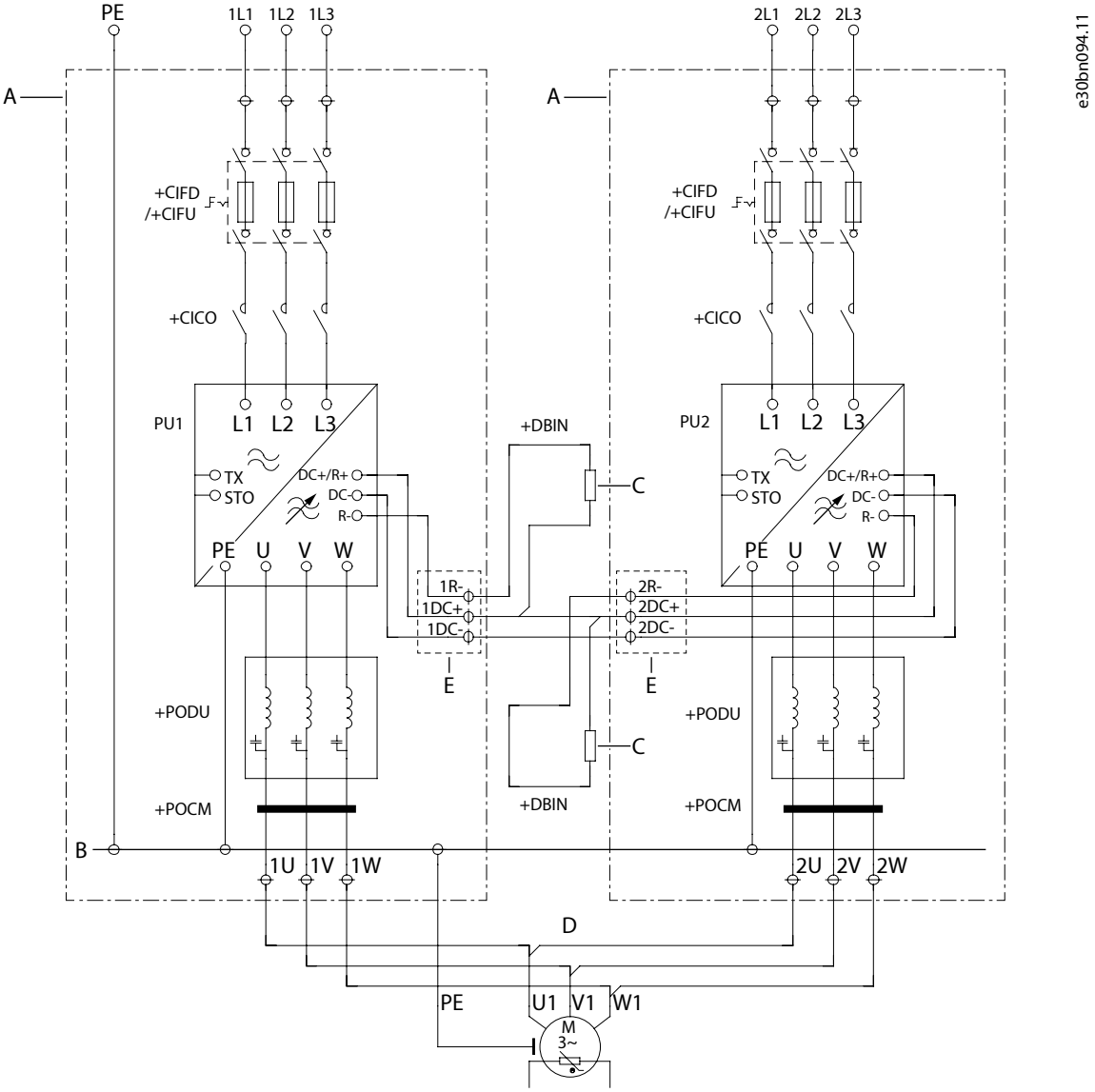

Figure 24: Main Circuit Wiring Diagram, MR11 and MR12

A	Main cabinet	B	PE bus
C	Brake resistor (not included in delivery)	D	Symmetrical motor cabling. The cables must have the same length from the power unit to a common point of coupling.
E	Only MR12		

The minimum length of motor cables from the power unit to a common point of coupling is 10 m (32.8 ft). When a dU/dt filter is used, the cables can be shorter than 10 m (32.8 ft).

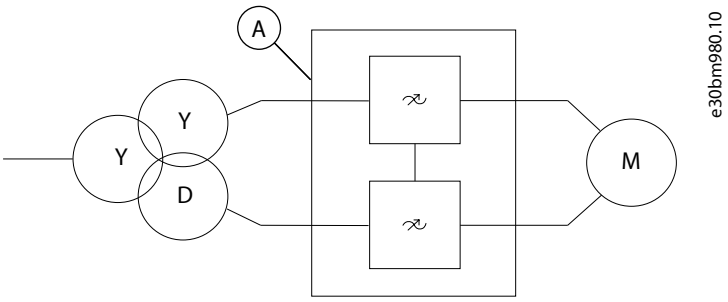

Figure 25: The 12-pulse Operation of MR11 and MR12

A	The MR12 drive

With MR11 and MR12, it is possible to use a 12-pulse connection to reduce the harmonics level in the supply side of the drive. In the 12-pulse connection, the parallel drives are cabled to the secondary windings of the transformer which have a 30° phase shift.

6.1.2 Location of the Fuses

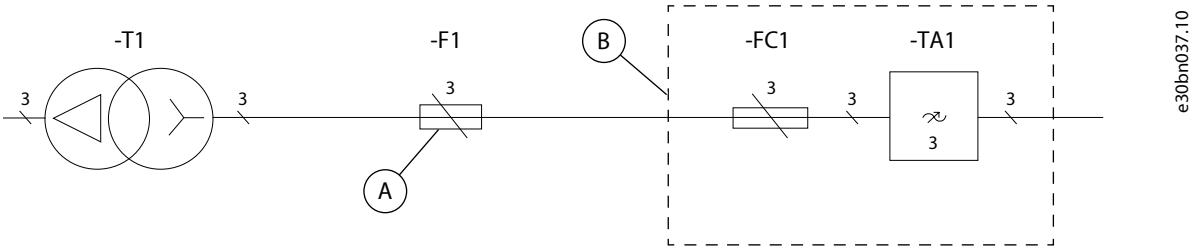

Figure 26: Location of Fuses, MR8–MR10

A	Main fuses	B	Cabinet

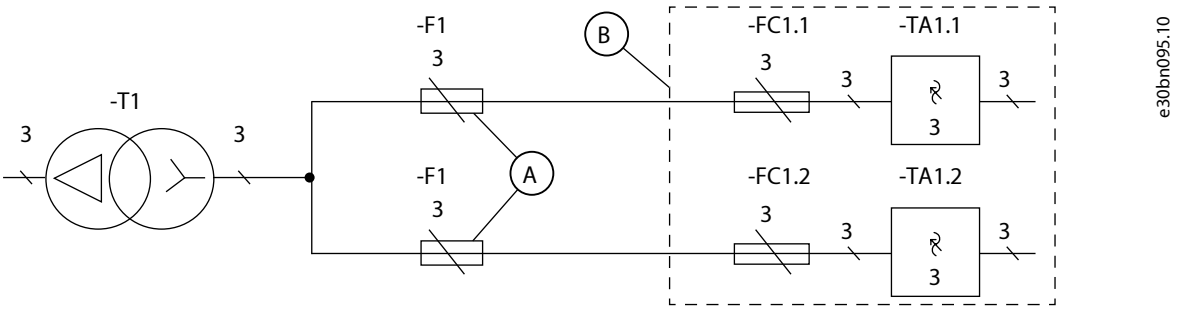

Figure 27: Location of Fuses, MR11–MR12

A	Main fuses	B	Cabinet

6.1.3 Recommendations for Cable and Fuse Sizes, IEC

Danfoss recommends the fuse type gG/gL (IEC 60269-1) for mains fuses (-F1). Use only fuses that have a sufficient voltage rating according to the mains voltage. Do not use larger fuses than what is recommended in 10.3.2 Cable and Fuse Sizes, Mains Voltage 380–500 V, IEC and 10.3.3 Cable and Fuse Sizes, Mains Voltage 525–690 V, IEC. These tables also show the typical symmetrically shielded copper and aluminum types of the cables that can be used with the drive.

IMPORTANT: Use separate fuses for the overcurrent protection of parallel cables.

Danfoss Drives Oy © 2026.11

Make sure that the operation time of the fuse is less than 0.4 s. The operation time agrees with the fuse type and the impedance of the supply circuit.

IMPORTANT: The mains cable and fuse sizes are valid up to a cable length of 100 m (328 ft) with mains I_K = 20 kA.

The drive is equipped with fast-acting aR-type fuses (-FC1). Do not use other fuse types.

The cable dimensions agree with the requirements of the standards EN60204-1 and IEC 60364-5-52:2001:

- The cables are PVC-isolated.
- The maximum ambient temperature is 30 °C (86 °F).
- The maximum temperature of the cable surface is 70 °C (158 °F).
- The maximum number of parallel cables on a ladder-type tray is 9 side by side.

In other conditions, select cable dimensions according to local safety regulations, the input voltage, and the load current of the drive.

6.1.4 Recommendations for Cable and Fuse Sizes, UL

The solid-state short-circuit protection does not supply protection for the branch circuit of the drive. To supply branch circuit protection, refer to the local electric codes.

Danfoss recommends fuse classes T or J (UL and CSA) to supply a branch circuit protection. To select the fuse voltage ratings, refer to the mains. Also, refer to local regulations, cable installation conditions, and cable specification. Do not use larger fuses than recommended in 10.3.4 Cable Sizes and Terminal Lugs, Mains Voltage 380–500 V, UL and 10.3.5 Cable Sizes and Terminal Lugs, Mains Voltage 525–690 V, UL.

The branch circuit protection can be supplied by a listed circuit breaker according to the local electrical code as an alternative to Class T or J fuses.

IMPORTANT: The sizes of the cables must agree with the requirements of the local electric codes.

For important information on the requirements of the grounding conductor, see the local electric codes.

For the correction factors for each temperature, see the instructions of the local electric codes.

The UL Approval is valid for input voltage up to 600 V.

6.1.5 Brake Resistor Cables

VACON® 100 Enclosed Drives have terminals for an optional external brake resistor. These terminals are identified with DC+/R+ and R-. The brake chopper is included only with option +DBIN.

Find the recommended sizes for the brake resistor cables in the tables linked in 10.7.1 List of Brake Resistor Rating Information.

⚠ CAUTION

SHOCK HAZARD FROM MULTI-CONDUCTOR CABLES

With a multi-conductor cable, the conductors that are not connected can cause an accidental contact with a conducting component.

- If a multi-conductor cable is used, cut off all conductors that are not connected.

NOTICE

The VACON® 100 FLOW software does not have the dynamic brake or the brake resistor functions.

6.2 EMC-compliant Installation Requirements

6.2.1 EMC-compliant Installation

For cable selections in different EMC levels, see Table 11.

To comply with the EMC levels, use a grommet when installing the motor cable at the two ends. For the EMC level C2, it is necessary to have a 360° grounding of the shield with grommets in the motor end.

Table 11: Recommendations for Cables

Cable type	Category C2 (1)	Category C3 (2)	Category C4 (2)
Motor cable	A symmetrical power cable with a compact low-impedance shield. A cable for the specified mains voltage. The recommended cable type is MCCMK or EMCMK. See Figure 28. The recommended maximum for the cable transfer impedance (1–30 MHz) is 100 mΩ/m.	A symmetrical power cable with a concentric protection wire. A cable for the specified mains voltage. The recommended cable type is MCMK. See Figure 28.	
Mains cable	A power cable for a fixed installation. A cable for the specified mains voltage. A shielded cable is not necessary. The recommended cable type is MCMK.		
Control cable	A shielded cable with a compact low-impedance shield, for example a JAMAK, or an SAB/ÖZCuY-O cable.		

1) 1st environment

2) 2nd environment

For the definitions of EMC protection levels, see IEC/EN 61800-3 + A1.

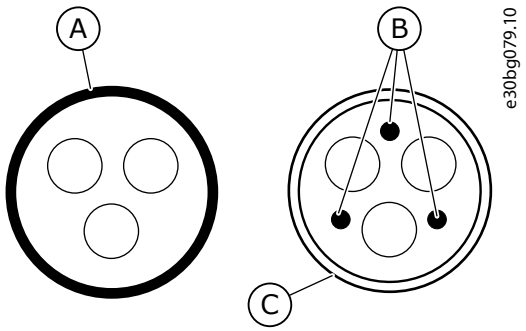

Figure 28: Cables with PE Conductors

A	The PE conductor and the shield	B	The PE conductors
C	The shield		

In all the enclosure sizes, to comply with the EMC standards, use the default values of the switching frequencies.

If installing a safety switch, make sure that the EMC protection continues from the start of the cables until their ends.

The drive must obey the standard IEC 61000-3-12. To obey it, the short circuit power S_{SC} must be a minimum of 120 R_{SCE} at the interface point between mains and the public mains. Make sure to connect the drive and the motor to mains with a short circuit power S_{SC} that is a minimum of 120 R_{SCE}. If necessary, contact the mains operator.

Danfoss Drives Oy © 2026.11

6.2.2 Installation in a Corner-Grounded Network

Corner grounding can be used with the drive sizes MR8–MR12 with a 208–240 V mains and with a 380–480 V mains.

When using corner grounding, the drive must have EMC protection level C4. To change the EMC protection level from C2 or C3 to C4, see the instructions in 6.5.1 Requirements for Installation in an IT System.

6.3 Grounding Requirements

6.3.1 Grounding

Ground the drive in accordance with the applicable standards and directives.

⚠ WARNING



LEAKAGE CURRENT HAZARD

Leakage currents exceed 3.5 mA. Failure to ground the drive properly can result in death or serious injury.

- Ensure the correct grounding of the equipment by a certified electrical installer.

NOTICE

DAMAGE TO THE DRIVE FROM INSUFFICIENT GROUNDING

Not using a grounding conductor can damage the drive.

- Make sure that the drive is always grounded with a grounding conductor that is connected to the grounding terminal that is identified with the PE symbol.

To comply with EN 61800-5-1, make sure that 1 or more of the following conditions for the protective circuit are fulfilled:

- The protective earthing conductor must have a cross-sectional area of minimum 10 mm^2 Cu or 16 mm^2 Al.
- There must be an automatic disconnection of the mains, if the protective earthing conductor breaks.
- There must be a terminal for a second protective earthing conductor in the same cross-sectional area as the first protective earthing conductor.

IMPORTANT: The connection must be fixed.

Cross-sectional area of the phase conductors (S) [mm^2]	The minimum cross-sectional area of the protective earthing conductor in question [mm^2]
$S \leq 16$	S
$16 < S \leq 35$	16
$35 < S$	S/2

The values stated in the preceding table are valid only if the protective earthing conductor is made of the same metal as the phase conductors. If this is not so, the cross-sectional area of the protective earthing conductor must be determined in a manner that produces a conductance equivalent to that which results from the application of this table.

The cross-sectional area of each protective earthing conductor that is not a part of the mains cable or the cable enclosure, must be a minimum of:

- 2.5 mm^2 if there is mechanical protection, and

- 4 mm^2 if there is no mechanical protection. With cord-connected equipment, make sure that the protective earthing conductor in the cord is the last conductor to be interrupted, if the strain-relief mechanism breaks.

Obey the local regulations on the minimum size of the protective earthing conductor.

⚠ WARNING



SHOCK HAZARD FROM PE CONDUCTOR

The drive can cause a DC current in the PE conductor. Failure to use a residual current-operated protective device (RCD) Type B or a residual current-operated monitoring device (RCM) can lead to the RCD not providing the intended protection and therefore can result in death or serious injury.

- Use a type B RCD or RCM device on the mains side of the drive.

NOTICE

MALFUNCTION OF FAULT CURRENT PROTECTIVE SWITCHES

Because there are high capacitive currents in the drive, it is possible that the fault current protective switches do not operate correctly.

NOTICE

VOLTAGE WITHSTAND TESTS

Doing voltage withstand tests can damage the drive.

- Do not do voltage withstand tests on the drive. The manufacturer has already done the tests.

6.3.2 Earth Fault Alarm

The earth fault can be retrieved through:

- Drive keypad
- Fieldbus communication
- Relay output

Select one of these methods to provide a fault or alarm, in accordance with the requirements of AS/NZS 5033.

6.3.3 Compatibility with RCDs

⚠ WARNING



SHOCK HAZARD FROM PE CONDUCTOR

The leakage current to protective earth exceeds 3.5 mA. Contact with the current can cause death or serious injury.

- Use a type B RCD or RCM device on the mains side of the drive.

If VACON® 100 is connected to an electrical installation where a residual current-operated protective device (RCD) is used as extra protection, the RCD must be of type B. The RCD must be marked with the following symbol:

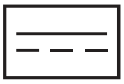

The total leakage current of all the electrical equipment in the installation must be considered. During start-up and in asymmetrical supply systems, the leakage current can be higher than normal and can cause the RCD to trip.

Danfoss Drives Oy © 2026.11

6.4 Installing the Cables

6.4.1 Preparation of the Cable Installation

- First, ensure that none of the components of the drive are live. Carefully read the warnings in 2.2 Safety Precautions.
- Make sure that the motor cables are sufficiently far from other cables.
- The motor cable must cross other cables at an angle of 90°.
- Avoid routing motor cables in parallel with other cables.
- Only use symmetrically EMC shielded motor cables.
- The maximum length of shielded motor cables is 200 m (656 ft).
- If cable insulation checks are necessary, refer to 8.3.1 Measuring the Cable and Motor Insulation for instructions.
- If the motor cables are in long parallel lines with other cables, obey the minimum distances.
- The minimum distances are also valid between the motor cables and the signal cables of other systems.

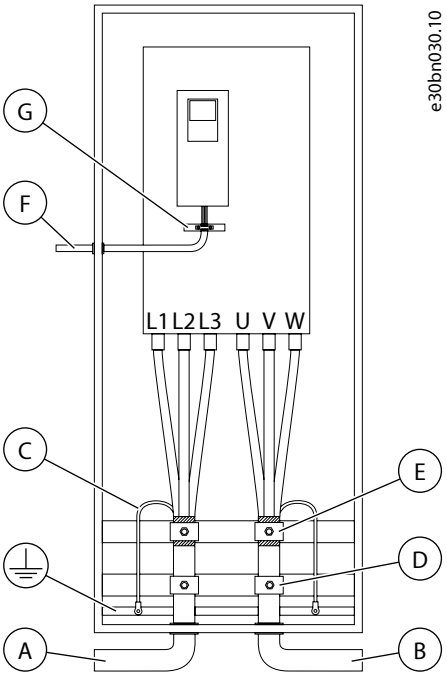

Figure 29: Overview of Cables

A	Mains cables	B	Motor cables
C	Grounding conductor	D	Pull relief
E	Grounding clamp for cable shield, 360° grounding	F	Control cable
G	Control cable grounding bar		

Table 12: Minimum Distances between Cables in Long Parallel Lines

Distance between cables [m (ft)]	Length of shielded cable [m (ft)]
0.3 (0.98)	≤ 50 (164)
1.0 (3.28)	≤ 200 (656)

6.4.2 Cable Installation, MR8

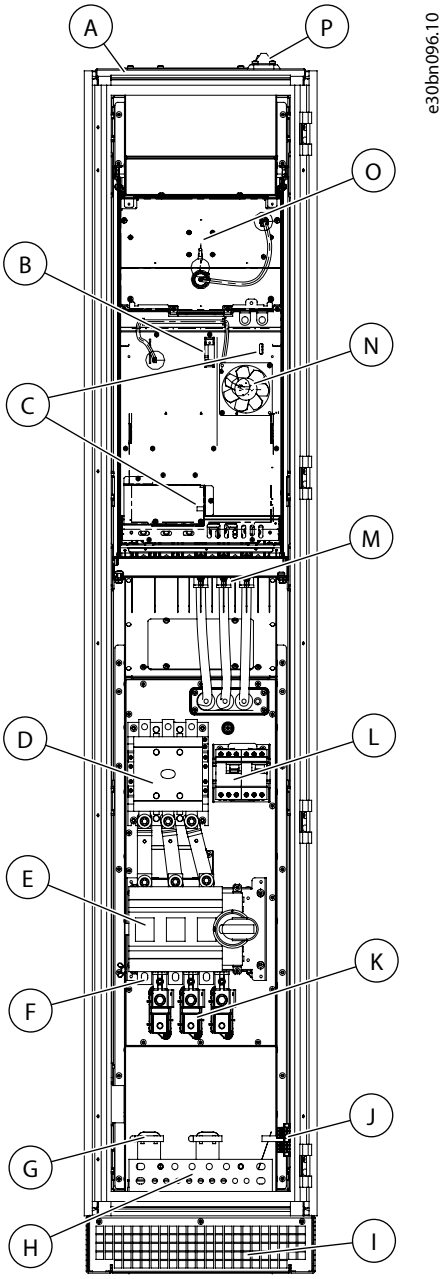

Figure 30: Inside Layout of MR8 without Protective Covers

A	Output air grill	B	Control connector of the power unit
C	EMC jumpers	D	Contactor option
E	Main switch option and fuses	F	Mains terminals
G	360° grounding	H	PE bar
I	Input air grill	J	Terminals for option +CAPU
K	Motor terminals with common-mode and/or dU/dt filter options	L	CAPT and CPIF options

Danfoss Drives Oy © 2026.11

M	Motor terminals without common-mode and/or dU/dt filter options	N	Internal fan for IP54
O	Main fan	P	Cable entry plate for control cables

6.4.3 Cable Installation, MR9

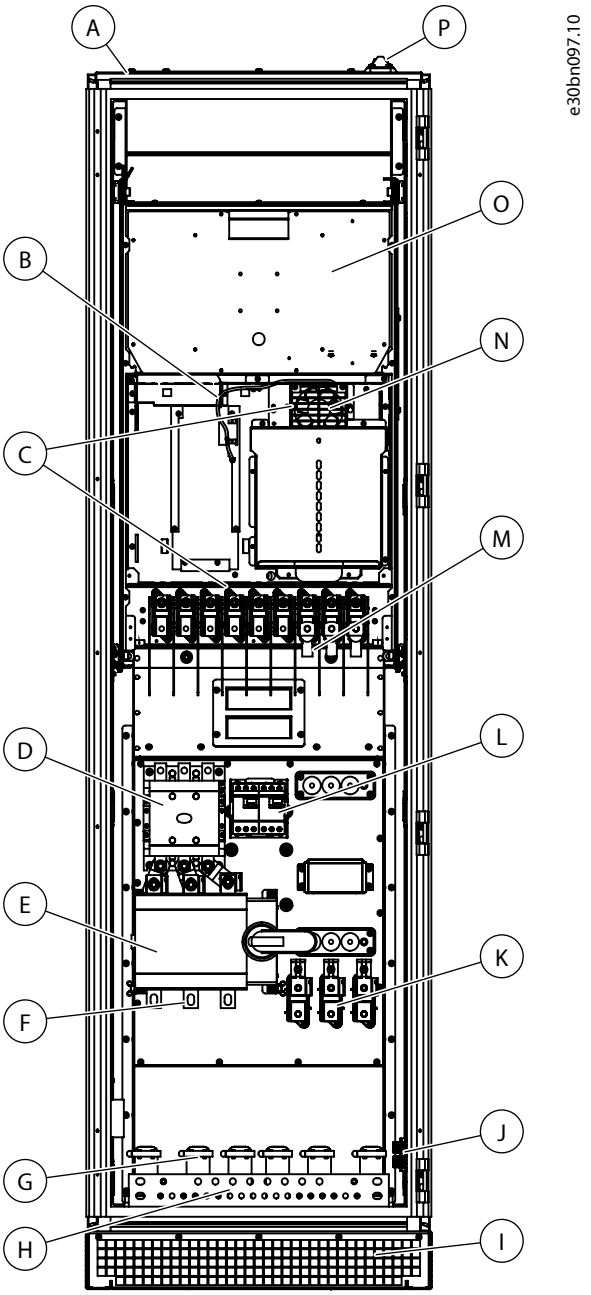

Figure 31: Inside Layout of MR9 without Protective Covers

A	Output air grill	B	Control connector of the power unit
C	EMC jumpers	D	Contactor option
E	Main switch option and fuses	F	Mains terminals
G	360° grounding	H	PE bar
I	Input air grill	J	Terminals for option +CAPU

K	Motor terminals with common-mode and/or dU/dt filter options	L	CAPT and CPIF options
M	Motor terminals without common-mode and/or dU/dt filter options	N	Internal fan for IP54
O	Main fan	P	Cable entry plate for control cables

6.4.4 Cable Installation, MR10

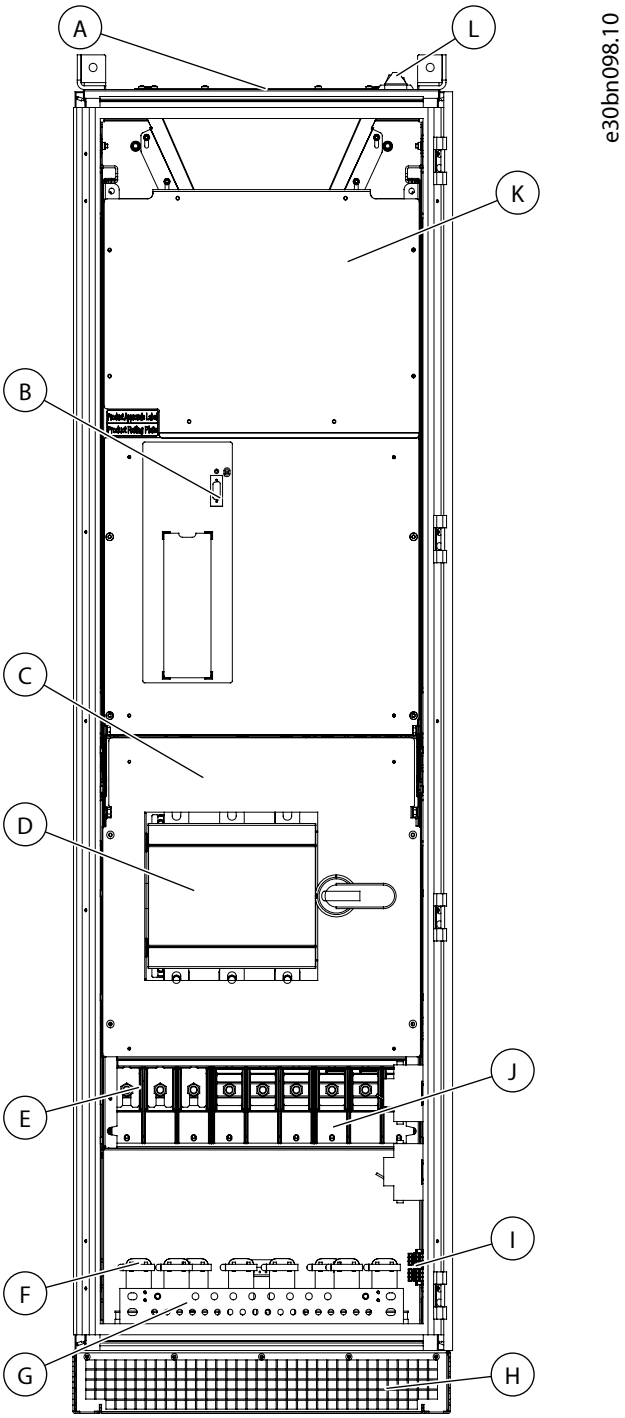

Figure 32: Inside Layout of MR10 without Protective Covers

Danfoss Drives Oy © 2026.11

A	Output air grill	B	Control connector of the power unit
C	EMC jumper (behind the covers)	D	Main switch option and fuses
E	Mains terminals	F	360° grounding
G	PE bar	H	Input air grill
I	Terminals for option +CAPU	J	Motor terminals
K	Service lid and the main fan underneath it	L	Cable entry plate for control cables

6.4.5 Cable Installation, MR11

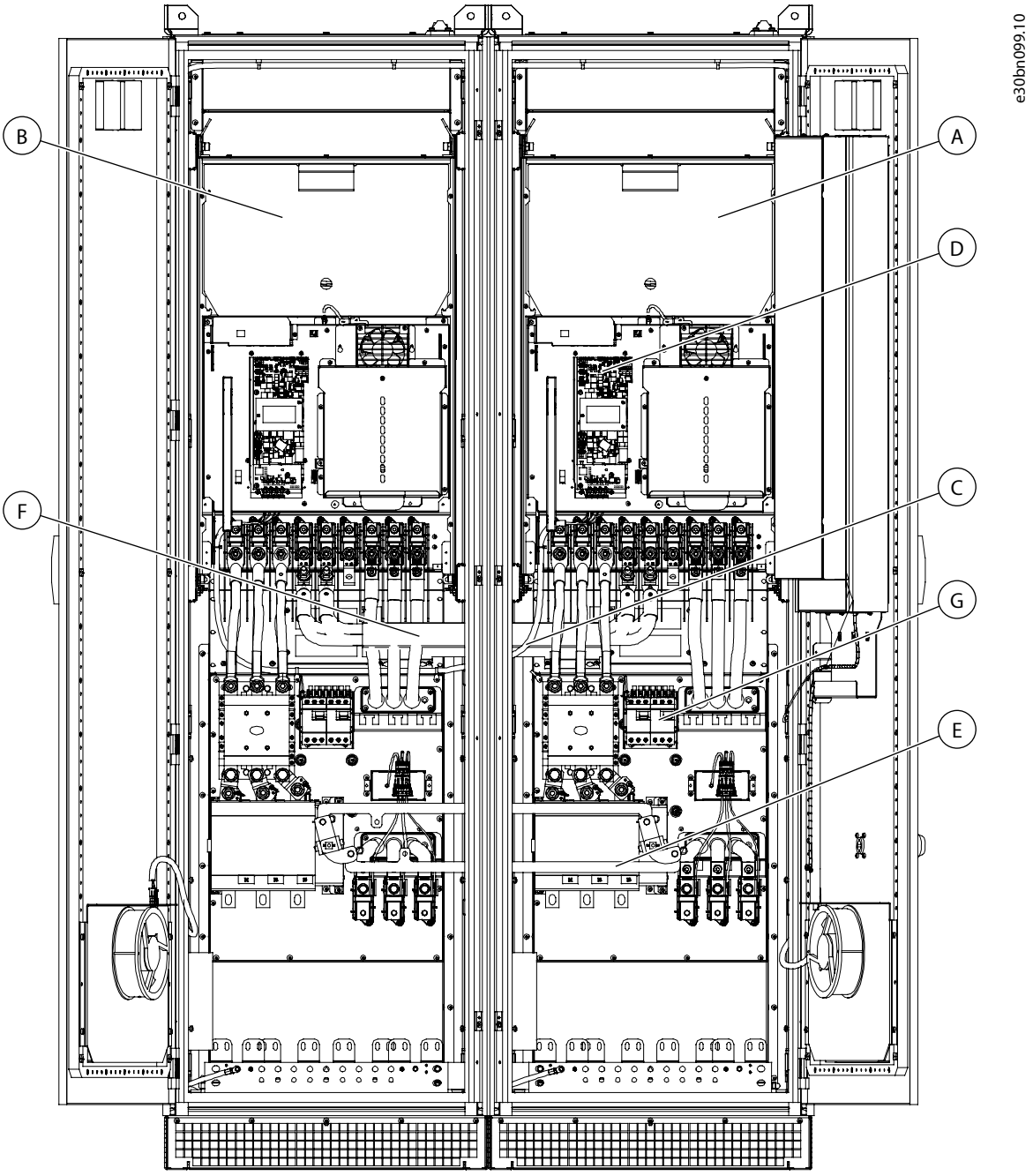

Figure 33: Inside Layout of MR11 without Protective Covers

A	Power unit 1	B	Power unit 2
C	Optical fiber cables	D	Connector for control unit cable (in power unit 1)
E	Fuse switch linkage for the fuse switch option	F	DC-link connection
G	Auxiliary voltage transformer		

6.4.6 Cable Installation, MR12

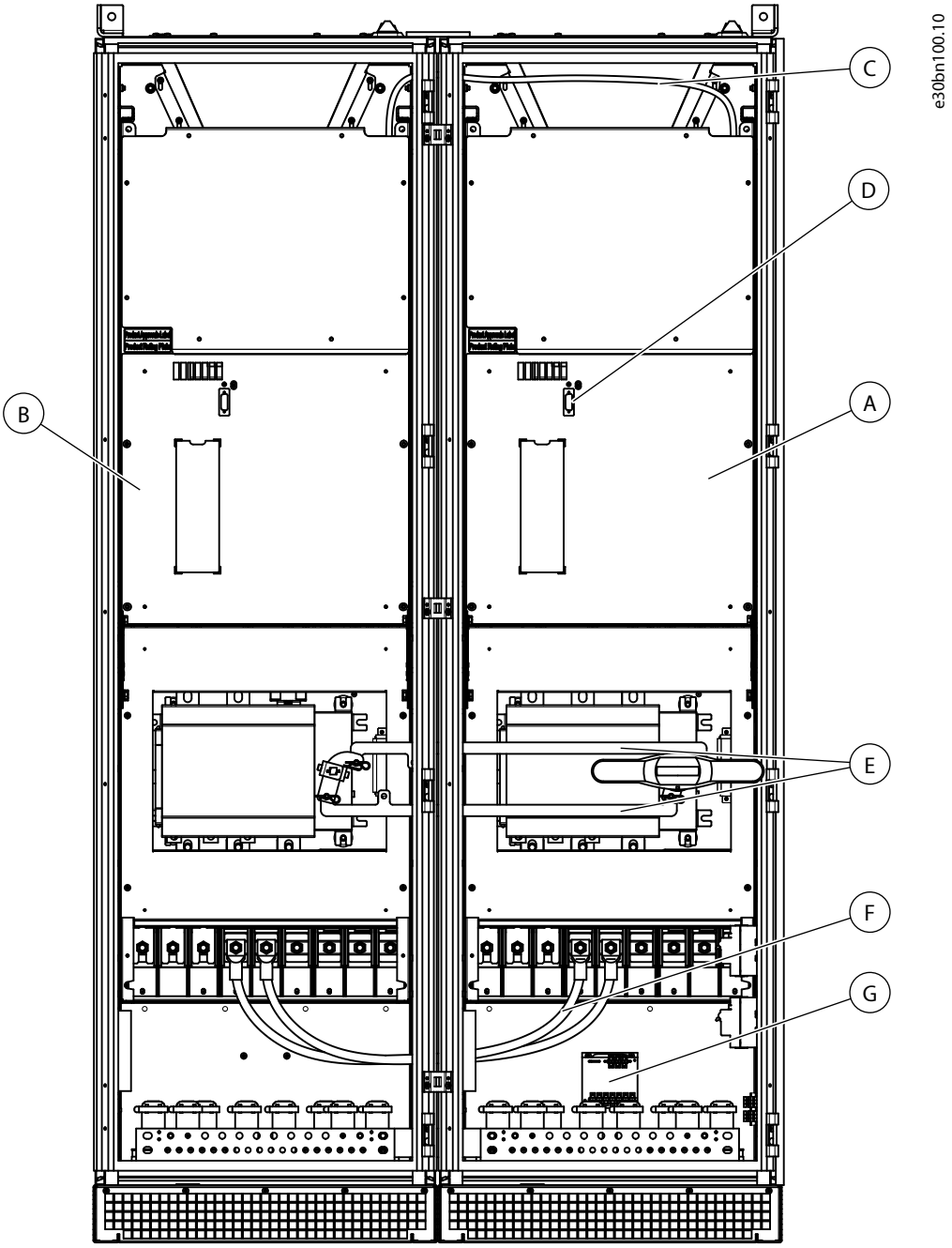

Figure 34: Inside Layout of MR12 without Protective Covers

A	Power unit 1	B	Power unit 2
C	Optical fiber cables	D	Connector for control unit cable (in power unit 1)

Danfoss Drives Oy © 2026.11

E	Fuse switch linkage for the fuse switch option	F	DC-link connection
G	Auxiliary voltage transformer		

6.4.7 Installing the Cables

1. Open the cabinet door.

   For MR12 enclosures with fuse switch options installed, remove the fuse switch linkage.

2. Remove the covers of the drive.
3. In IP54, cut the grommets open to move the cables through them.

   Do not cut the grommet openings wider than necessary for the cables to go through.

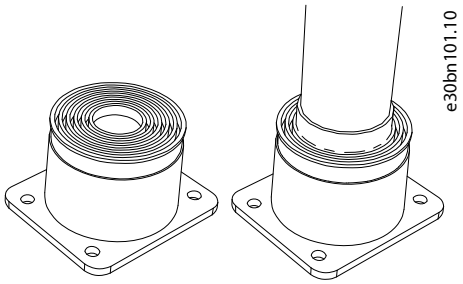

Figure 35: IP54 Only

4. Put the cables into their places.
5. Strip the motor cable and mains cable.

   Keep the grounding conductor as short as possible, but long enough to reach the grounding bar.

6. Strip the brake resistor cable.

   Keep the grounding conductor as short as possible, but long enough to reach the grounding bar.

7. Connect the stripped cables. See the correct tightening torques in 10.4 Tightening Torques of Terminals.
   a. Connect the phase conductors of the mains cable and of the motor cable into the correct terminals. If there is a brake resistor cable, connect its conductors into the correct terminals.
   b. Attach the grounding conductor of each cable to a grounding terminal with a grounding clamp for grounding conductors.
   c. Make sure that the external grounding conductor is connected to the grounding bar. See 6.3.1 Grounding.
   d. If many cables are used on 1 terminal, place the cable lugs on top of each other.

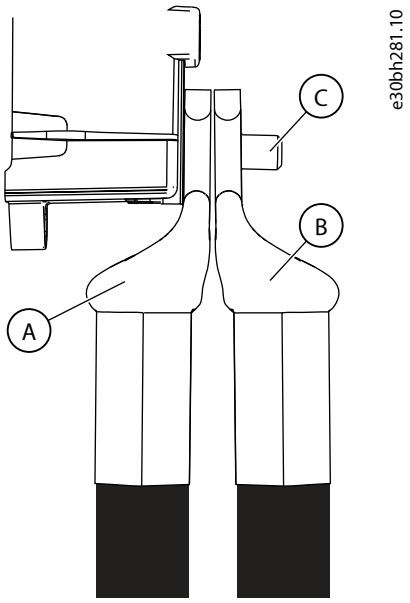

Figure 36: 2 Cables on the Terminal in MR8, MR9, and MR11

A	First cable lug	B	Second cable lug
C	Terminal		

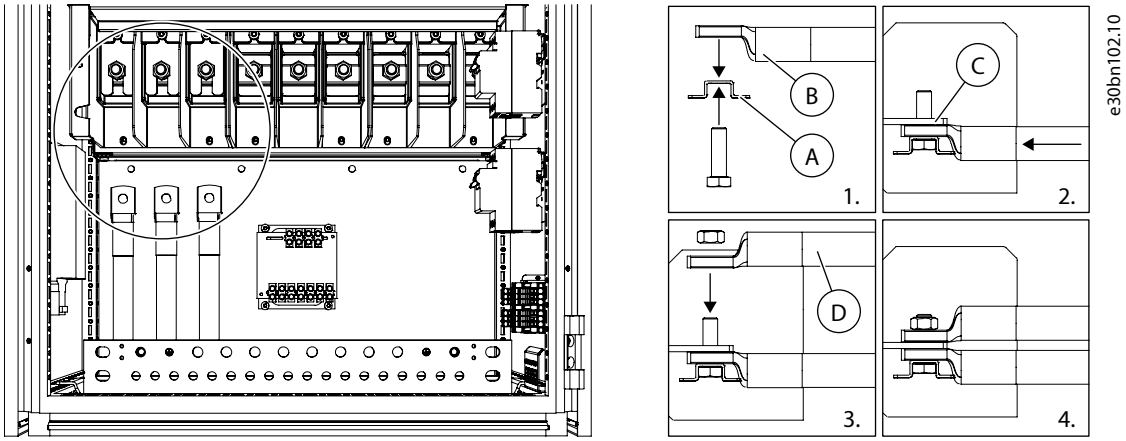

Figure 37: 2 Cables on the Terminal in MR10 and MR12

A	Terminal bolt holder	B	First cable lug
C	Terminal	D	Second cable lug

Danfoss Drives Oy © 2026.11

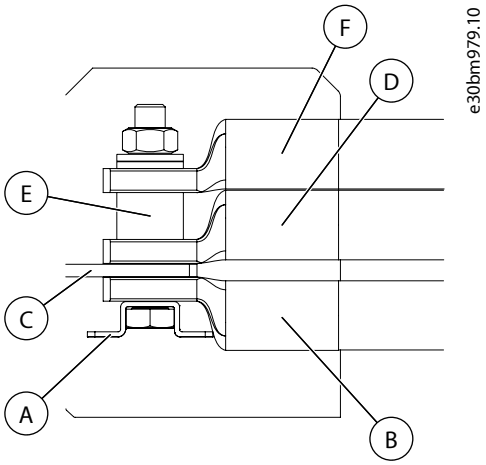

Figure 38: 3 Cables on the Terminal

8. Expose the shield of all 3 cables to make 360° connection with the metallic grounding clamps for cable shields.

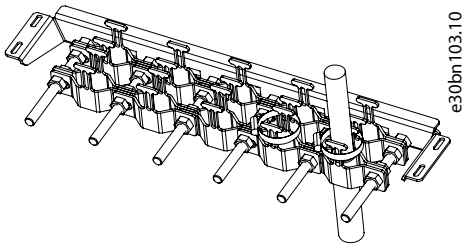

Figure 39: IP21

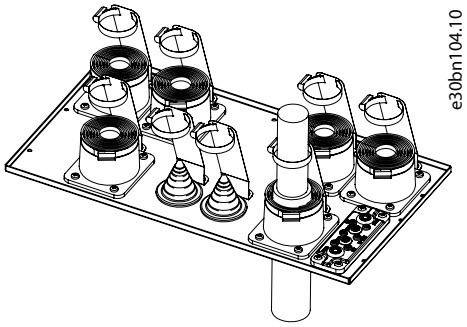

Figure 40: IP54

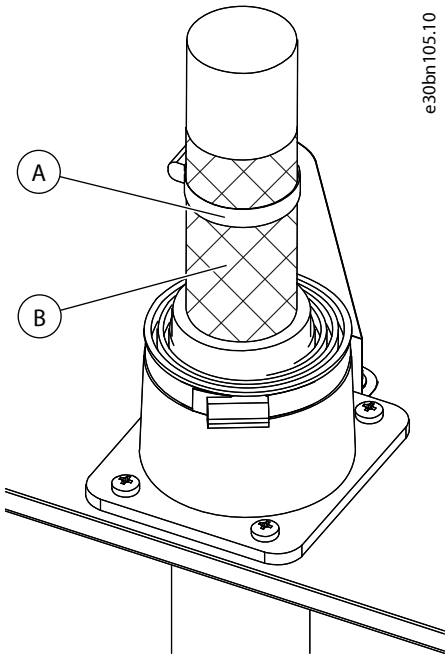

Figure 41: Shield and Grounding Clamp

A	Grounding clamp for cable shield	B	Cable shield

9. Attach the terminal cover and then the enclosure extension.
10. Close the cabinet door.
11. Make sure that the grounding conductor is connected to the motor and to the PE terminals marked with the ground symbol.



6.4.8 Installing the Cables Between Cabinets, MR12 (+CICO)

1. Connect the control cables.
   a. Connect the fan power supply.
   b. If the cabinet heater (+CACH) is installed, connect the cabinet heater supply.
   c. Connect the overtemperature protection.

Danfoss Drives Oy © 2026.11

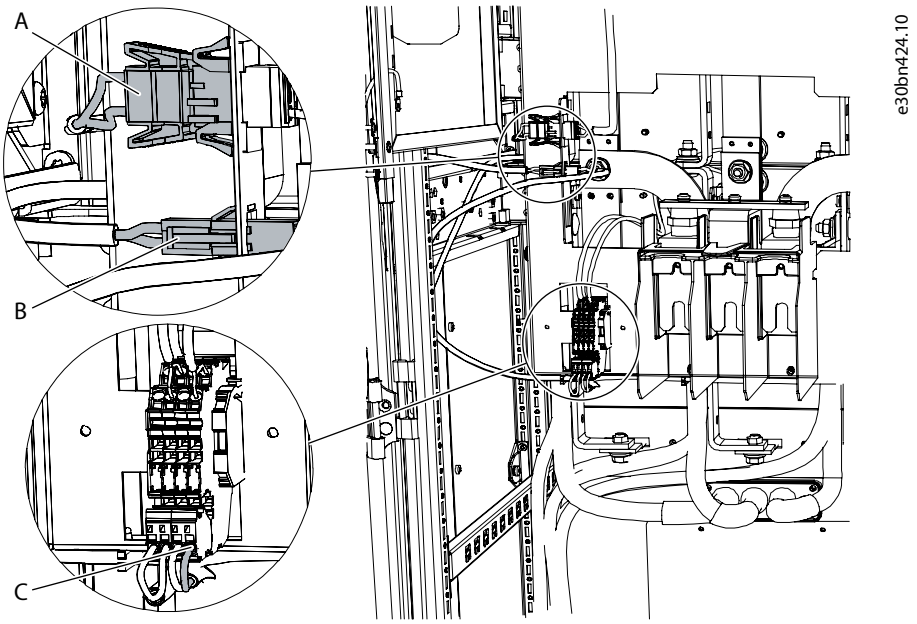

Figure 42: Control Cable Connections

A	Fan power supply	B	Cabinet heater supply
C	Overtemperature protection		

6.5 Installation in an IT System

6.5.1 Requirements for Installation in an IT System

If the mains is impedance-grounded (IT), the drive must have the EMC protection level C4. If the drive has the EMC protection level C2 or C3, it is necessary to change it to C4. To change the EMC protection level, remove the EMC jumpers.

⚠ WARNING



SHOCK HAZARD FROM THE COMPONENTS

The components of the drive are live when the drive is connected to mains.

- Do not make changes in the drive when it is connected to mains.

NOTICE

DAMAGE TO THE DRIVE FROM INCORRECT EMC LEVEL

The EMC level requirements for the drive depend on the installation environment. An incorrect EMC level can damage the drive.

- Before connecting the drive to the mains, make sure that the EMC level of the drive is correct for the mains.

IMPORTANT: For a 600 V or 690 V product that is configured for a C4 installation on an IT network, the maximum switching frequency is limited to the default 2 kHz.

6.5.2 Removing the EMC Jumper in MR8

Follow this procedure to change the EMC protection of the drive from level C3 to level C4.

1. Open the cover of the drive.

2. Locate the EMC box and remove the cover.

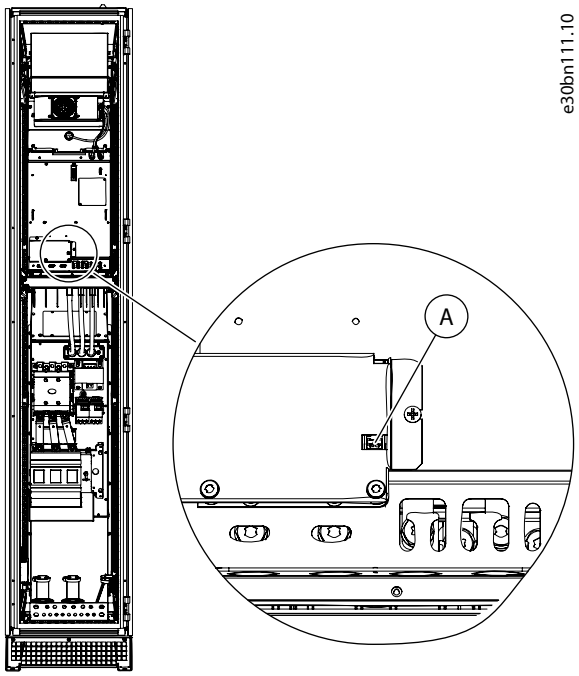

A	EMC jumper

3. Remove the jumper.
4. Attach the cover of the EMC box again.
5. Locate the grounding arm and push it down.

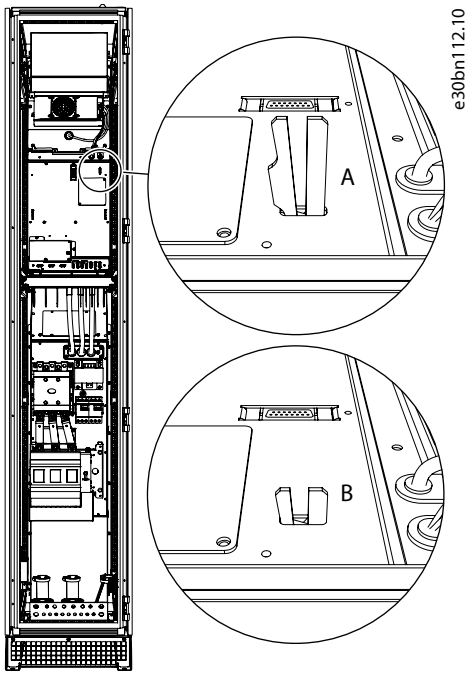

A	Grounding arm is up (level C3)	B	Grounding arm is down (level C4)

6. After the change, write "The EMC level was changed" and the date of change on the "Product changed" label. If the label is not attached yet, attach it on the drive near the product label, see 4.7 Using the Product Modified Label.

Danfoss Drives Oy © 2026.11

6.5.3 Removing the EMC Jumpers in MR9

Follow this procedure to change the EMC protection of the drive from level C3 to level C4.

1. Open the covers of the drive.
2. Loosen the screws of the cover plate and remove it.

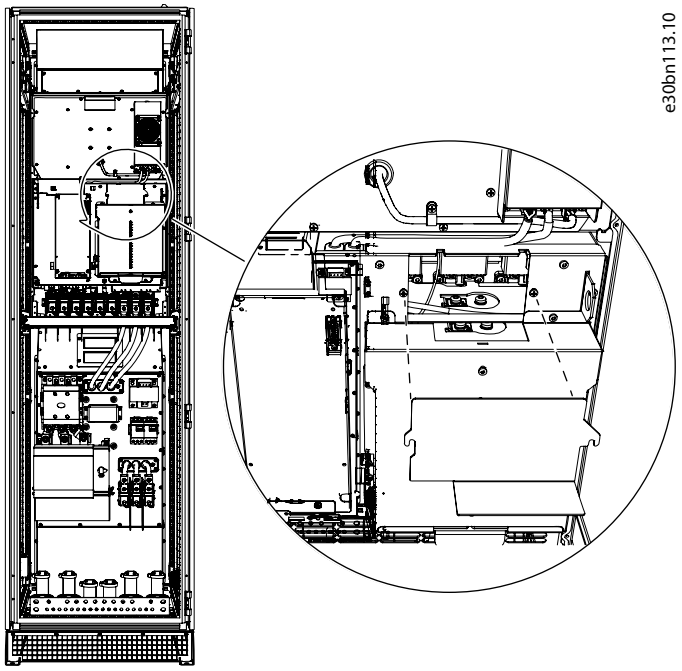

3. Remove the EMC jumper.

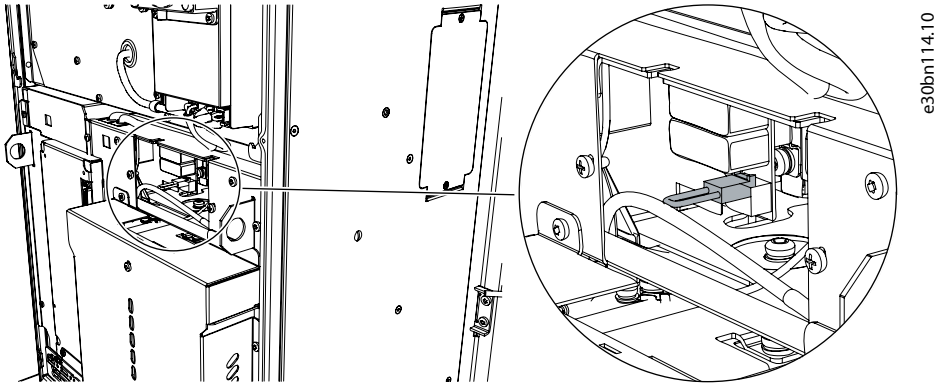

4. Remove the cover of the enclosure extension, the touch shield, and the I/O plate with the I/O grommet plate.
5. Find the 2 EMC jumpers on the EMC board. They are not adjacent to each other.

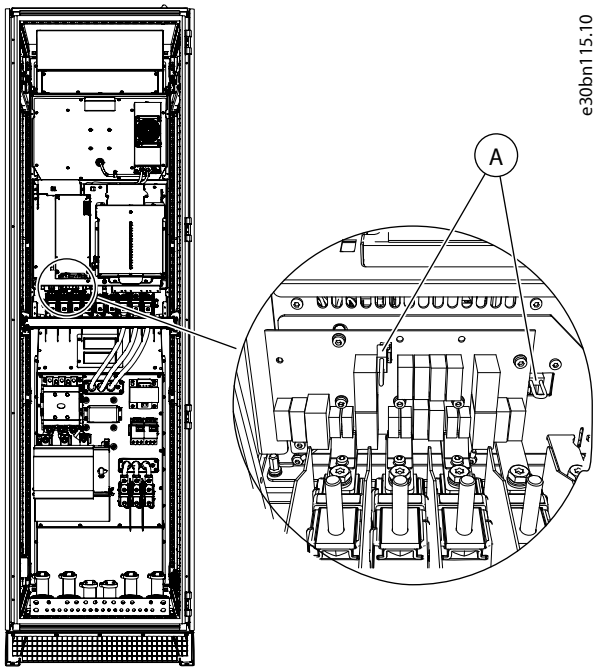

A	EMC jumpers

6. After the change, write "The EMC level was changed" and the date of change on the "Product changed" label. If the label is not attached yet, attach it on the drive near the product label, see 4.7 Using the Product Modified Label.

6.5.4 Removing the EMC Jumpers in MR11

Follow this procedure to change the EMC protection of the drive from level C3 to level C4. Do the procedure for both power units.

1. Open the cover of the drive.
2. Remove the EMC jumper.

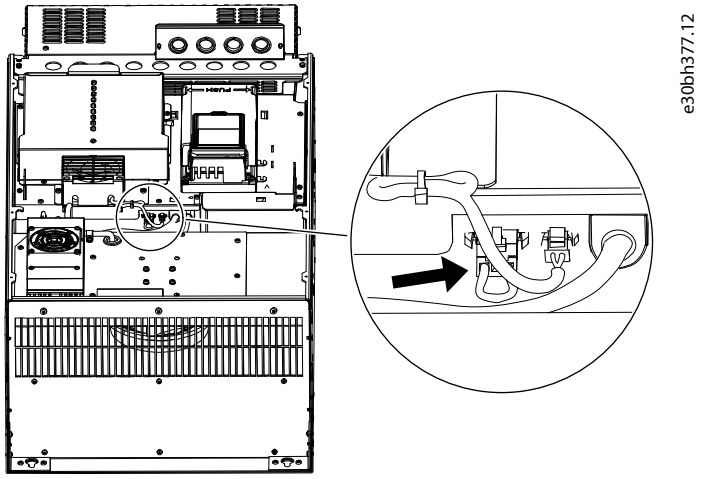

The extract shows the EMC jumper.

3. Remove the cover of the enclosure extension, the touch shield, and the I/O plate with the I/O grommet plate.
4. Find the 2 EMC jumpers on the EMC board. They are not adjacent to each other.

Danfoss Drives Oy © 2026.11

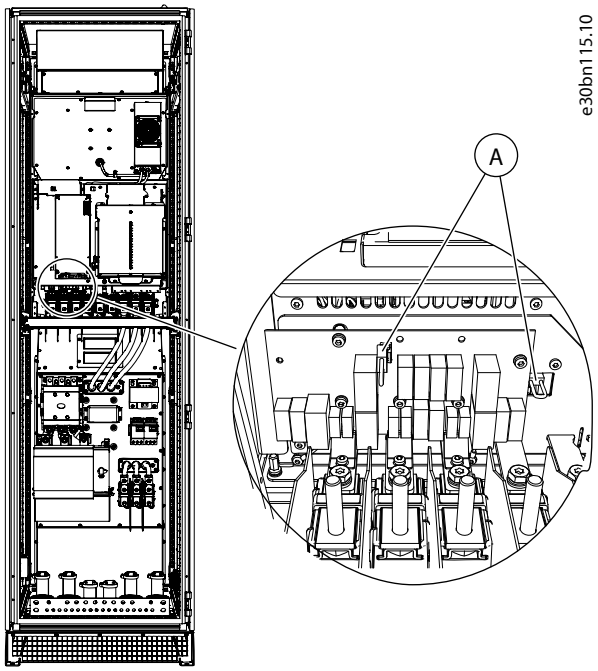

A	EMC jumpers

6.5.5 Removing the EMC Jumper in MR10 and MR12

Follow this procedure to change the EMC protection of the drive from level C3 to level C4.

1. Remove the covers of the drive.

   In MR12, do these steps for each power unit. Also remove the fuse switch linkage.

2. Locate the EMC jumper between terminals L2 and L3.

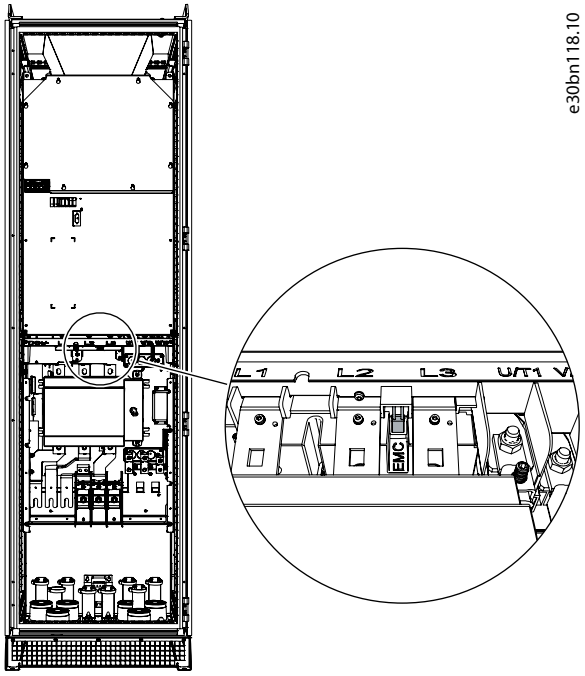

3. Remove the jumper.

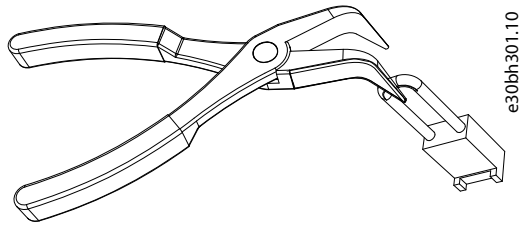

4. After the change, write "The EMC level was changed" and the date of change on the "Product changed" label. If the label is not attached yet, attach it on the drive near the product label, see 4.7 Using the Product Modified Label.

6.5.6 Disconnecting the EMC Capacitors (with Brake Chopper Option)

1. Disconnect the 3 capacitors by removing 3 screws and bending the capacitor legs aside.

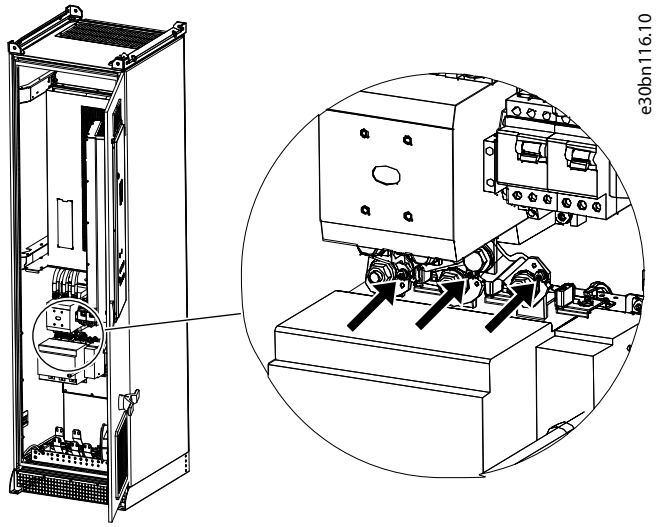

Figure 43: Contactor and OS

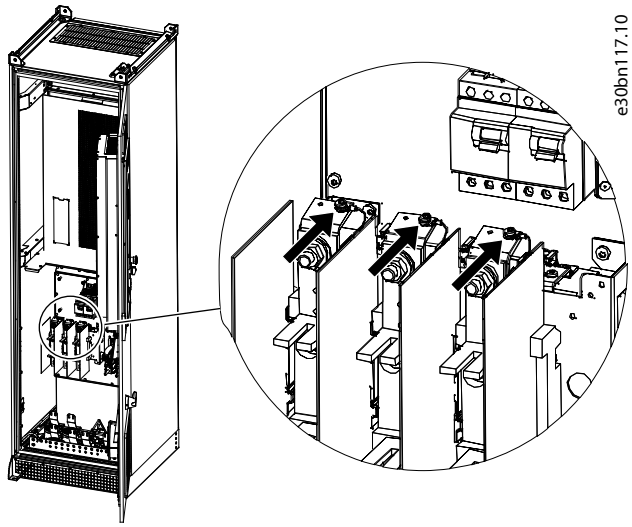

Figure 44: OFAX or OS

2. After the change, write "The EMC level was changed" and the date of change on the "Product changed" label. If the label is not attached yet, attach it on the drive near the product label, see 4.7 Using the Product Modified Label.

6.6 Installation in a Marine Environment

If the drive is to be installed in a marine environment, see the instructions in the *VACON® 100 Marine Installation Guide*.

Danfoss Drives Oy © 2026.11

7 Control Compartment

7.1 The Control Compartment of the Enclosed Drive

The enclosed drive has a door-mounted control compartment, separated from the cabinet section, for mains and motor terminals. Access the control compartment through a separate door on the cabinet door.

The order-specific documents are on the inside of the control compartment door.

Ensure that the control cables are long enough to avoid tight bends in the cables between the control compartment and the frame of the drive.

The control compartment contains the following:

- Control unit
- Control panel
- Option boards
- Optional auxiliary components and their related wires
- Terminals for internal connections
- Terminals for control cabling
- Order-specific documentation
- Optional buttons and signal lights (on the door)

Connect the cables of the options boards OPTB2, OPTB4, OPTB5, OPTF3, and OPTF4 (depending on the drive configuration) as default to the terminals for control cabling -XD2 on the control compartment.

Do no connect the cables of he fieldbus boards to the -XD2 terminals, but directly to the control terminals or the Ethernet terminal on the control unit. Connect the analog signals, for example, reference signals and temperature signals, and the fieldbus cable directly to the correct option board.

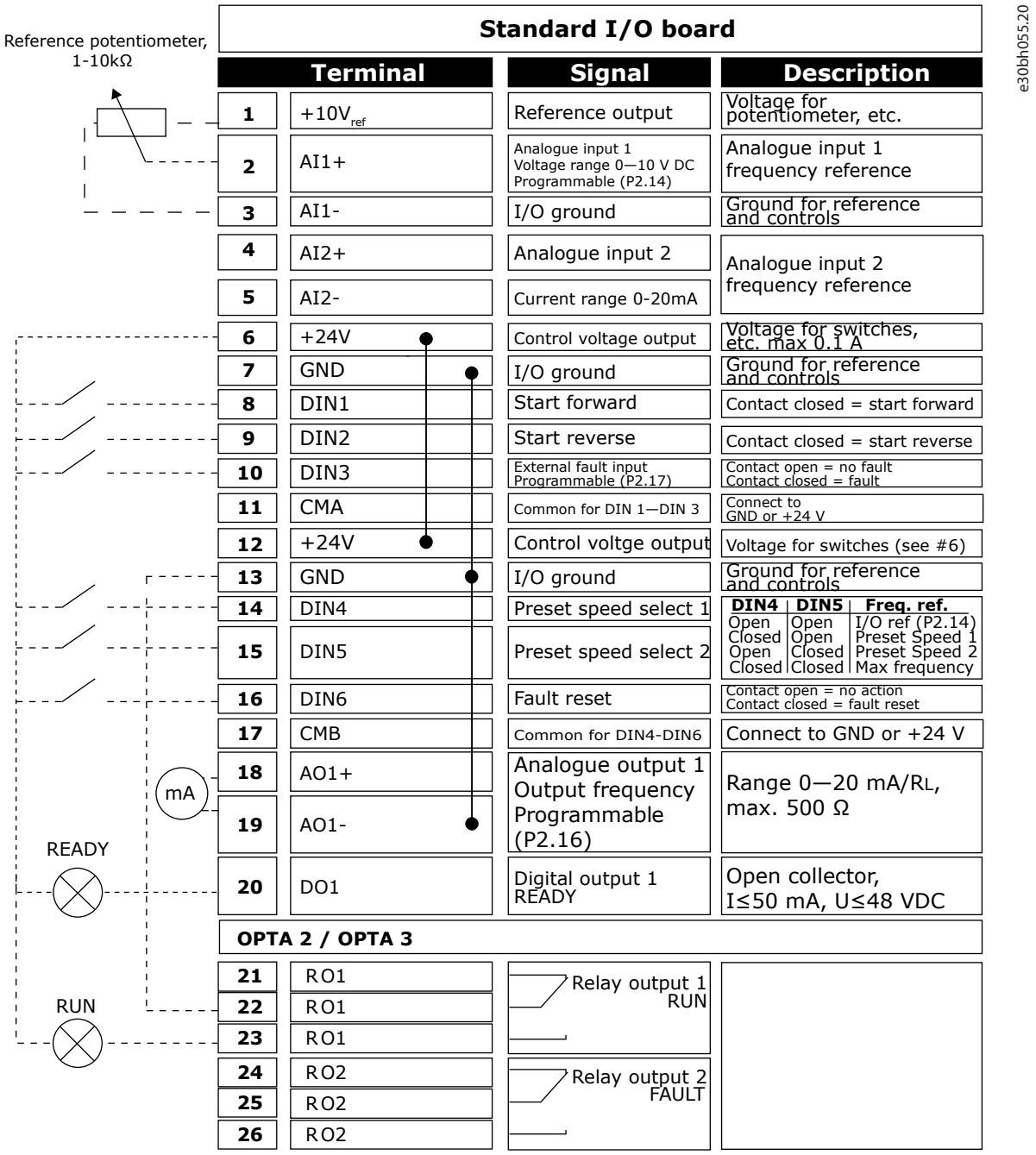

Figure 45: Signals of the Control Terminals on the Standard I/O Board with a Connection Example

IMPORTANT: Digital inputs can be isolated from ground with a DIP switch.

Danfoss Drives Oy © 2026.11

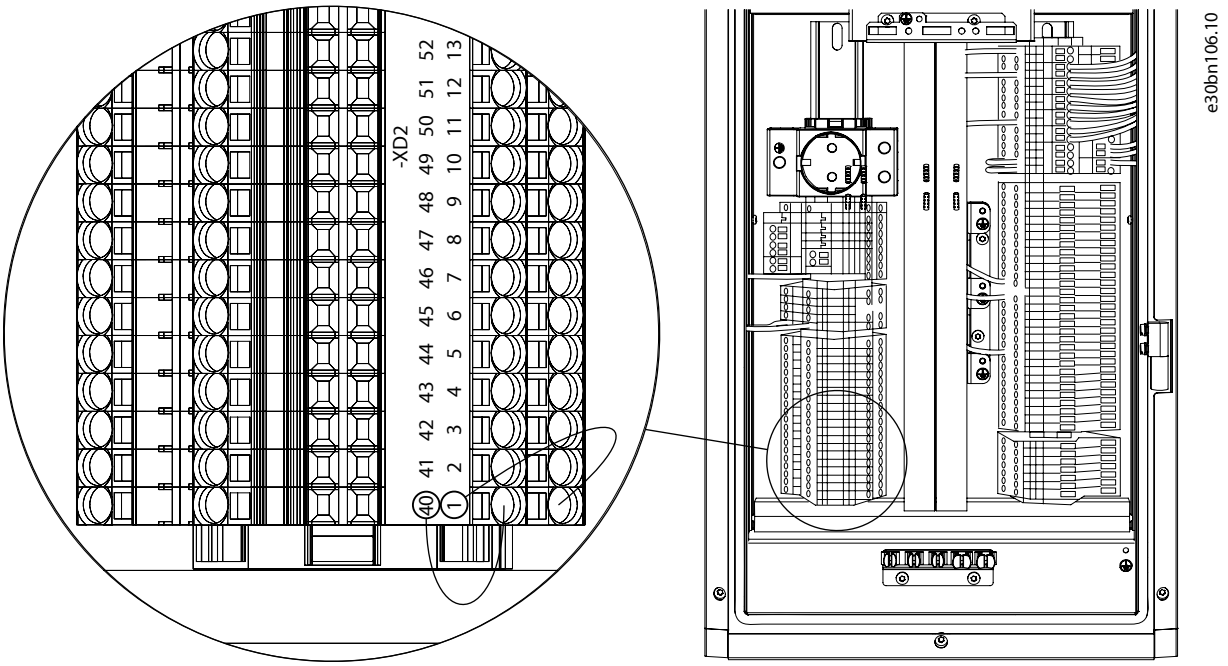

Figure 46: Markings of the Extended I/O Terminals

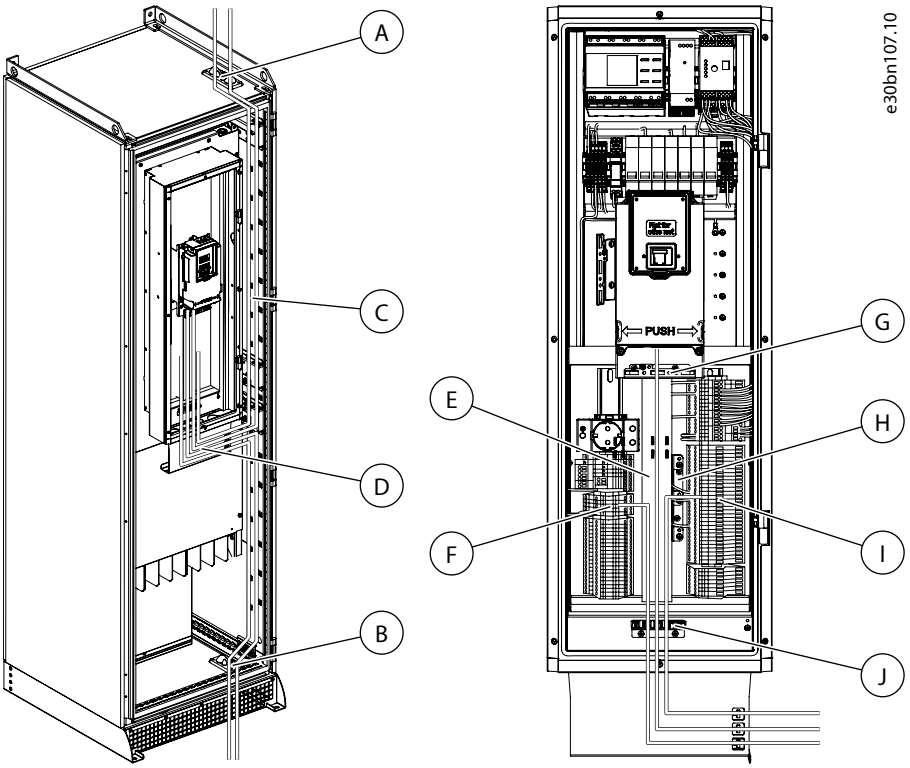

Figure 47: Control Cabling of the Enclosed Drive

A	I/O cabling from top	B	I/O cabling from bottom
C	The cable routing plate with places for cable ties	D	Cable carrier
E	Cable ducts	F	Extended I/O terminals (+CTID) to be used freely
G	Control grounding plate	H	Customer grounding plate
I	Terminals for control cabling (default)	J	Grounding clamps for cable shield

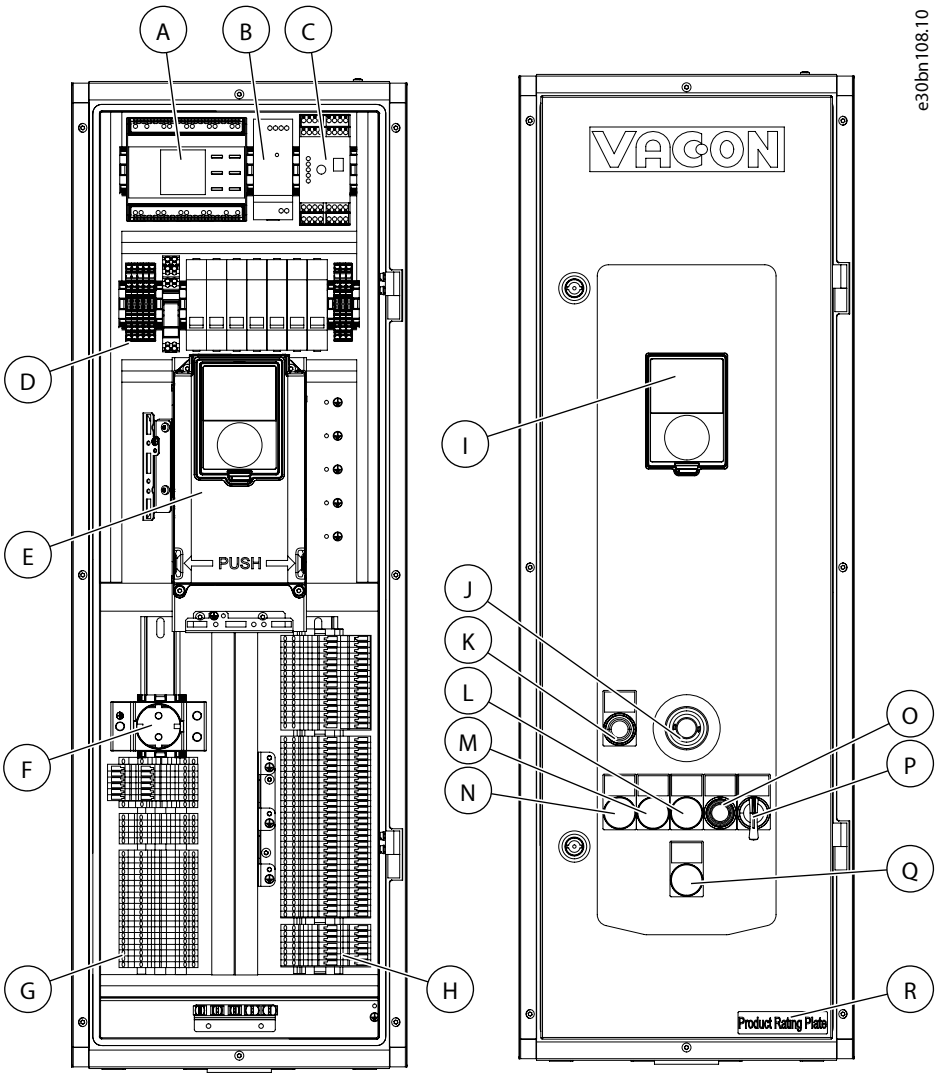

Figure 48: Control Compartment Components in the Cabinet

A	Insulation fault sensor (+CPIF)	B	24 V DC power supply (+CAPD)
C	Emergency stop Cat 1 (+CPS1)	D	MCBs for auxiliary devices
E	Control unit	F	230 V AC socket (+CAPS)
G	Extended I/O terminals (+CTID) to be used freely	H	Terminals for control cabling (default)
I	Control panel	J	Emergency stop push button (+CPS0, +CPS1, +CPSB)
K	Emergency stop reset button (+CPS1)	L	Fault signal light (+CDLP)
M	Run signal light (+CDLP)	N	Ready signal light (+CDLP)
O	Reset button (+CDLP)	P	0–1 - start switch (+CICO)
Q	Insulation fault (+CPIF)	R	Rating plate of the drive, the option codes, and the serial number

Danfoss Drives Oy © 2026.11

7.2 Control Unit Components

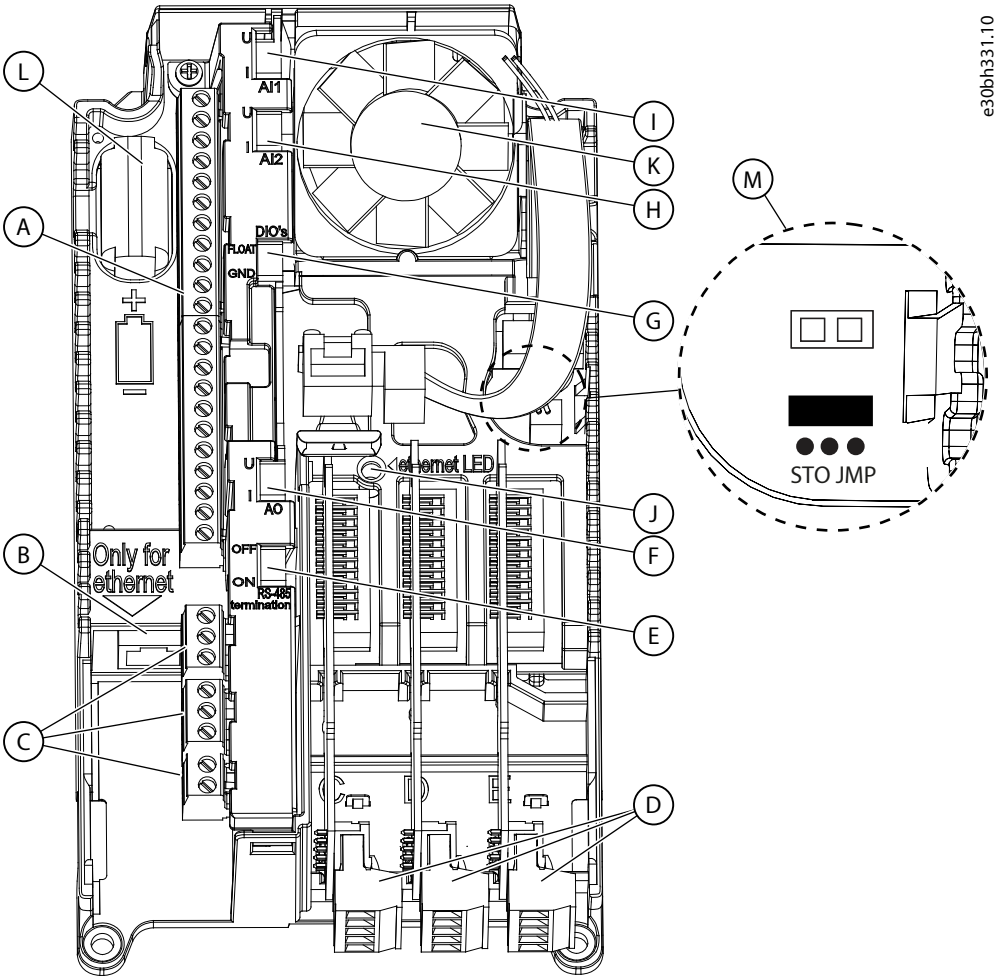

Figure 49: Components of the Control Unit

A	The control terminals for the standard I/O connections	B	The Ethernet connection
C	The relay board terminals for 3 relay outputs or 2 relay outputs and a thermistor	D	The option boards
E	A DIP switch for the RS-485 bus termination	F	A DIP switch for the signal selection of Analog Output
G	A DIP switch for the isolation of the digital inputs from ground	H	A DIP switch for the signal selection of Analog Input 2
I	A DIP switch for the signal selection of Analog Input 1	J	The status indicator of the Ethernet connection
K	A fan (only in IP54 of MR4 and of MR5)	L	The battery for the RTC
M	The location and the default position of the Safe Torque Off (STO) jumper		

On delivery of the drive, the control unit contains the default control interface (graphical control panel). If special options were selected in the order, the option boards are included loose in the delivery. On the next pages, there is information on the terminals and general wiring examples.

It is possible to use the drive with an external power source with these properties: +24 V DC ±10%, minimum 1000 mA. Connect the external power source to terminal 30. This voltage is sufficient to keep the control unit on and for setting the parameters. The measurements of the main circuit (for example, the DC-link voltage, and the unit temperature) are not available when the drive is not connected to mains.

The status indicator on the control unit shows the status of the drive. The status indicator is located on the control panel, below the keypad, and it can show five different statuses.

Table 13: Control Unit Indicator Light Status Definitions

Color/status of the indicator light	Status of the drive
Blinking slowly	Ready
Green	Run
Red	Fault
Orange	Alarm
Blinking fast	Downloading software

7.3 DIP Switches on the Control Unit

7.3.1 Selection of Terminal Functions with DIP Switches

Two selections for specified terminals can be done with the DIP switches. The switches have two positions: up and down. See the location of the DIP switches and the possible selections in Figure 50.

Danfoss Drives Oy © 2026.11

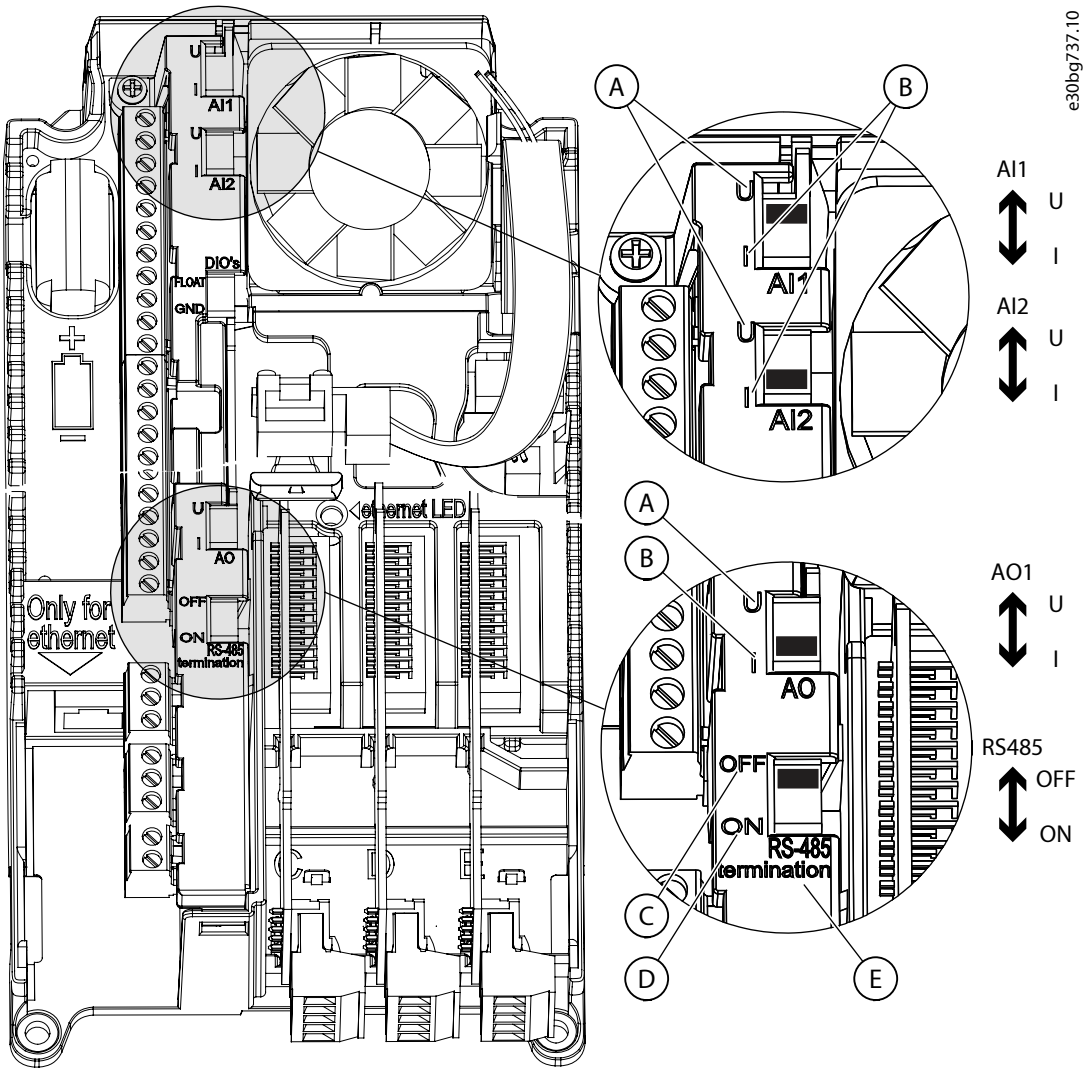

Figure 50: The Selections of the DIP Switches

A	The voltage signal (U), 0–10 V input	B	The current signal (I), 0–20 mA input
C	OFF	D	ON
E	The RS485 bus termination		

Table 14: The Default Positions of the DIP Switches

The DIP switch	The default position
AI1	U
AI2	I
AO1	I
RS485 bus termination	OFF

7.3.2 Isolation of the Digital Inputs from Ground

It is possible to isolate from ground the digital inputs (terminals 8–10 and 14–16) on the standard I/O board. To do this, change the position of a DIP switch on the control board.

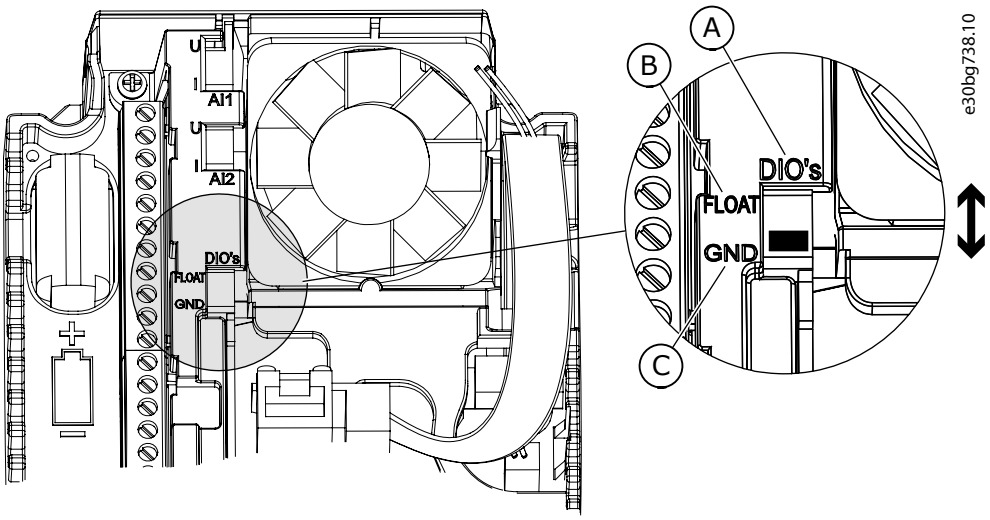

Figure 51: Change the Position of This Switch to Isolate the Digital Inputs from Ground

A	The digital inputs	B	Floating
C	Connected to ground (default)		

7.4 Fieldbus Connection

7.4.1 Fieldbus Terminals

The drive can be connected to a fieldbus with an RS-485 or an Ethernet cable.

- If an RS-485 cable is used, connect it to terminals A and B of the standard I/O board.
- If an Ethernet cable is used, connect it to the Ethernet terminal.

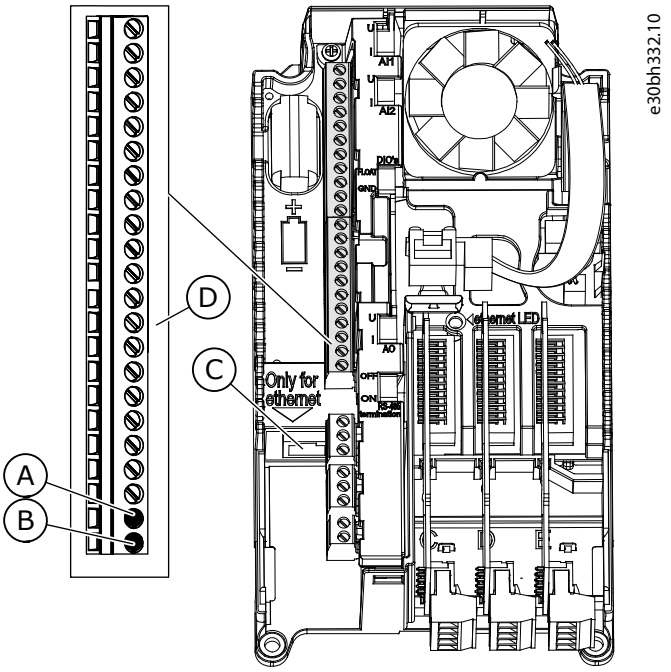

Figure 52: Ethernet and RS-485 Connections

A	RS-485 terminal A = Data -	B	RS-485 terminal B = Data +
C	The Ethernet terminal	D	The control terminals

Danfoss Drives Oy © 2026.11

7.4.2 Internal Fieldbuses in VACON® 100 Products

The VACON® 100 product family supports internally 4 Ethernet fieldbuses:

- Modbus TCP/UDP
- BACnet/IP
- PROFINET IO (requires +FBIE license)
- EtherNet/IP (requires +FBIE license)

Having a single Ethernet port, the Ethernet fieldbuses can be connected to networks with star topology.

The VACON® 100 family RJ45 connector does not have speed or activity indicator lights. Instead it has a single indicator light in the middle of the drive. The indicator light cannot be seen unless the covers are removed. The indicator light works as follows:

- Indicator light is dimmed (dark) when the port is connected to a 10 Mbit/s network.
- Indicator light is yellow when the port is connected to a 100 Mbit/s network.
- Indicator light is dimmed (dark) when the port is connected to a 1000 Mbit/s network. The drive does not support a 1000 Mbit/s Ethernet, so there is no communication.

The VACON® 100 product family supports internally 3 RS-485 fieldbuses:

- Modbus RTU
- BACnet MSTP
- Metasys N2

7.4.3 Fieldbus Cabling

7.4.3.1 General Cabling Instructions for Fieldbus

To keep the response time and the number of incorrect dispatches to a minimum, use only standard industrial components in the network and avoid complex structures. The requirements for commercial cabling components are specified in section 8-8 in the ANSI/TIA/EIA-568-B series standards. Using commercial components can decrease system performance. The use of such products or components can cause unsatisfactory performance in industrial control applications.

7.4.3.2 Cable Routing

It is important that fieldbus cables are routed separately from motor cables. The recommended minimum distance is 300 mm. Do not let fieldbus cables and motor cables cross each other. If it is not possible, the fieldbus cables must cross other cables at an angle of 90°.

Shielded fieldbus and control cables can be routed in parallel. To have further shielding, install a grounded metal conduit around the fieldbus and control cable run.

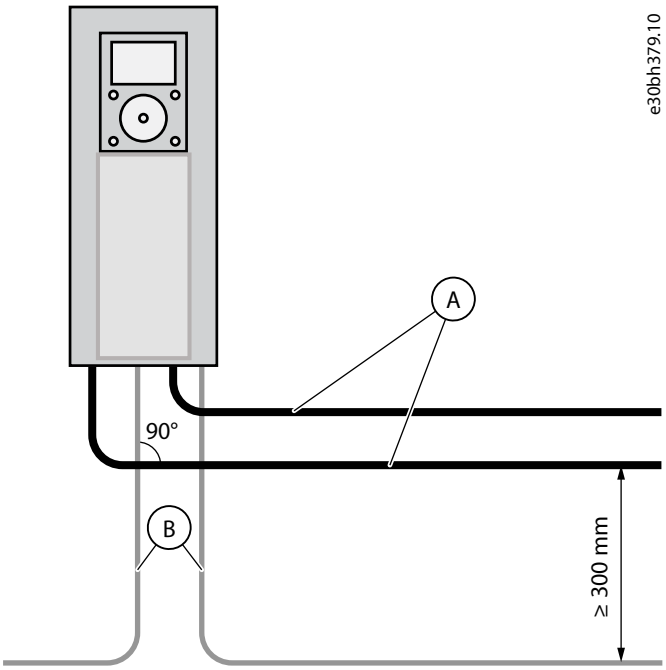

Figure 53: Routing the Motor and Fieldbus Cables

A	Motor cables	B	Fieldbus cables

Use cables with the right length. If there is extra cable, put it in a noise free location. Multiple rounds of cable and a large circumstance area make an antenna (see Figure 54). Noise connects to fieldbus cable and can cause communication problems.

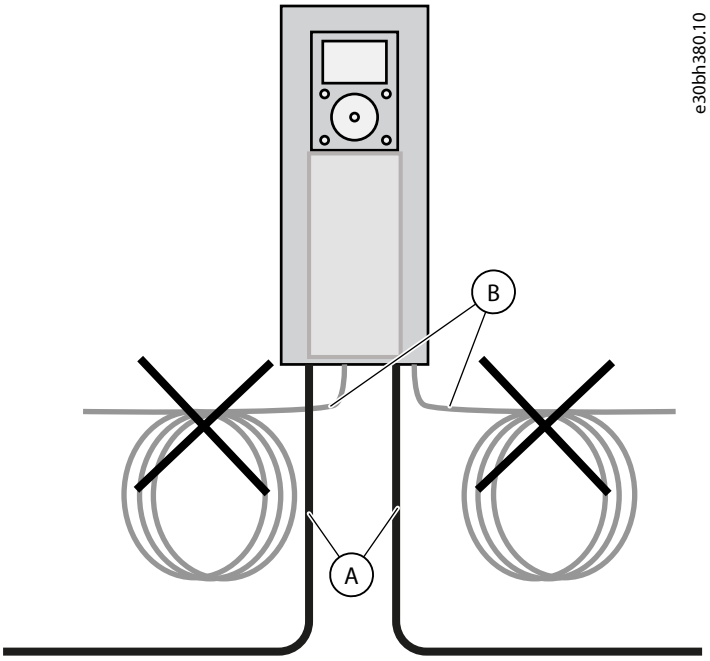

Figure 54: Installation that Makes an Antenna

A	Motor cables	B	Fieldbus cables

Danfoss Drives Oy © 2026.11

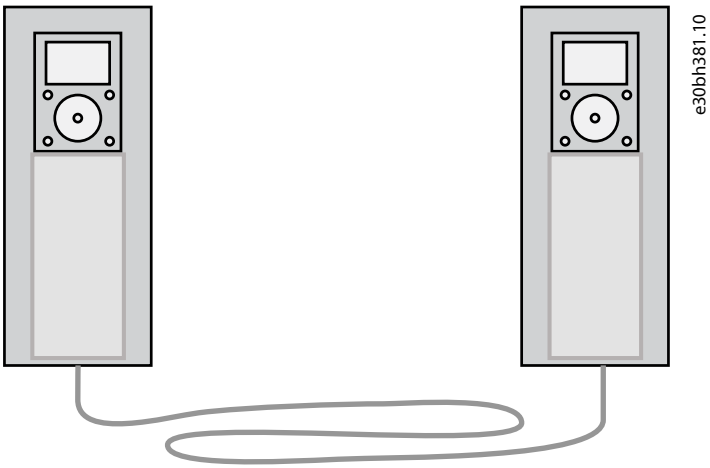

Figure 55: Example of Good Routing of Extra Fieldbus Cable

NOTICE

To avoid shield fracture, do not bend the cable too much or run the cable back and forth on the same path.

7.4.3.3 Strain Relief

If there is a possibility of tensile load on the cable, install it with a strain relief. If possible, do not make the strain relief of the fieldbus cables at the shield connection to ground. Using the shield connection as strain relief can reduce the effectiveness of the bonding. The tensile load and vibration can also damage the shield.

7.4.4 Ethernet Commissioning and Cabling

7.4.4.1 General Cabling Instructions for Ethernet

Use only shielded cables of category CAT5e or CAT6.

Table 15: The Recommended Cable Shielding

Recommendation order	Cable
1	Shielded and Foiled Twisted Pair (S/FTP) CAT5e or CAT6
2	Shielded Twisted Pair (STP) CAT5e or CAT6
3	Foiled Twisted Pair (FTP) CAT5e or CAT6
4	Unshielded Twisted Pair (UTP) CAT5e or CAT6

Use standard Ethernet 100 Mbit pinout connectors. The plug type to be used is a shielded RJ45 plug, maximum length 40 mm (1.57 in).

The maximum length of the CAT5e or CAT6 cable between two RJ45 ports is 100 meters. It is possible to get cables that have a certain length, or get cable in bulk and assemble the connectors at commissioning. If the connectors are assembled manually, obey the instructions of the manufacturer. If making the cables by yourself, be sure to select correct crimp tools and use precaution. The individual contacts of the RJ45 socket are allocated as per the T568-B standard.

In basic use, it is important that the RJ45 connectors in the cable (or the ones assembled) connect the cable shield to the ground level of the Ethernet terminal in the drive.

7.4.4.2 Grounding the Cable Shield

Equipotential bonding refers to using metal parts to make ground potential everywhere in the installation the same, the system ground. If the ground potential of all the devices is the same, it is possible to prevent current from flowing through paths that are not designed to have current. Cables can also be shielded efficiently.

An error in the equipotential bonding can cause bad quality or malfunction of the fieldbus communication. It is not easy to find an error in equipotential bonding. It is also not easy to correct errors in large installations after commissioning. Thus, in the planning phase it is important to plan the installation to get good equipotential bonding. In the commissioning phase, make the equipotential bonding connections carefully.

Do grounding with low HF impedance, for example, via backplane mounting. If ground connection wires are necessary, use wires that are as short as possible. Paint coating acts as an insulator on metal and prevents grounding. Remove paint coating before doing grounding.

When equipotential bonding is good, the RJ45 connectors in the cable (or the ones assembled) must connect the cable shield to the ground level of the Ethernet terminal in the drive. The cable shield can be connected to the ground level at both ends via the built-in RC circuit (see Figure 56). This connection grounds the disturbances and, to some degree, prevents current from flowing in the cable shield. To do this, use a shielded Ethernet cable (S/FTP or STP) which grounds devices via an RJ45 connector and thus uses a built-in drive RC circuit.

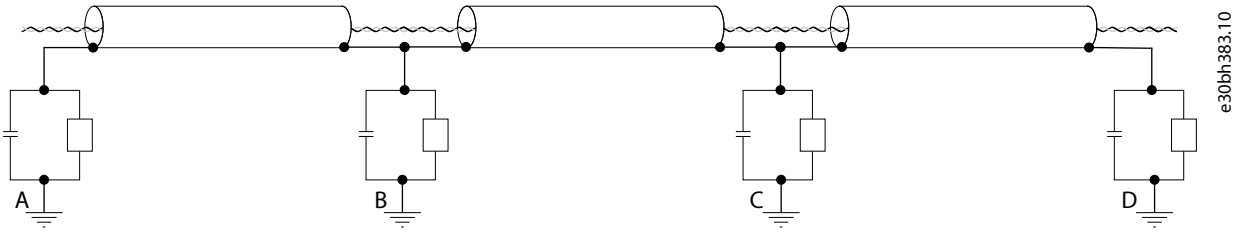

Figure 56: Grounding via the Built-in RC Circuit

When disturbances are strong, the cable shield can be exposed and then 360° grounded (see Figure 59) directly to the drive ground (see Figure 57).

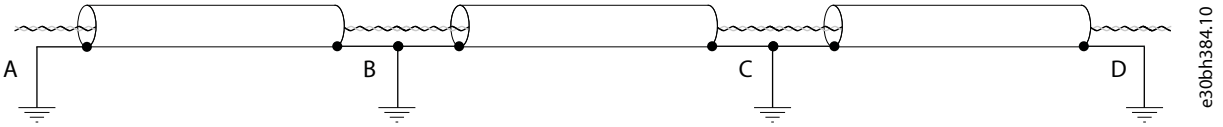

Figure 57: Grounding in a Noisy Environment with Good Equipotential

If potentials at points A, B, C, and D are different and cannot be made similar, cut the cable shields as in Figure 58.

If the ground potentials of the connected devices are different, a cable shield that is connected at both ends causes current to flow in the shield. To prevent the current flow, the cable shield must be disconnected or cut at some point between the devices. Do the grounding at the location nearest to the place where the disturbances meet the cable (see Figure 58).

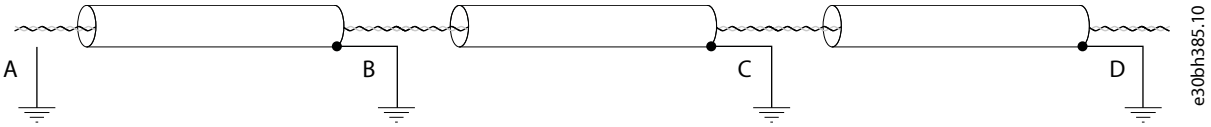

Figure 58: Grounding in Noisy Environment with Poor Equipotential, an Example of Cutting the Cable Shield

Ground the cable shield as in examples A and C (see Figure 59). Do not ground the cable shield as in example B.

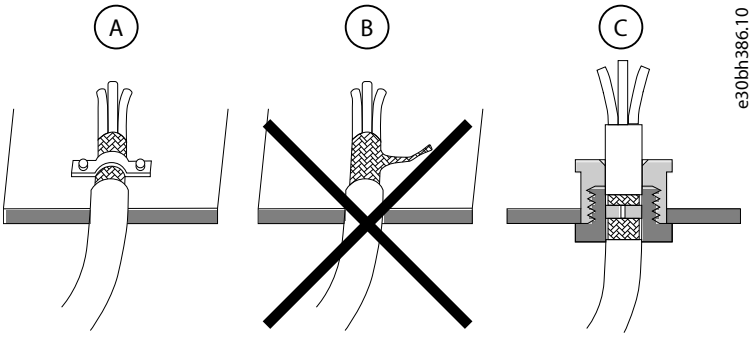

Figure 59: Grounding the Cable Shield

Danfoss Drives Oy © 2026.11

A	Cable clamp	B	Ground terminal
C	Cable gland		

7.4.4.3 Using Fieldbus through an Ethernet Cable

1. Connect the Ethernet cable to its terminal.

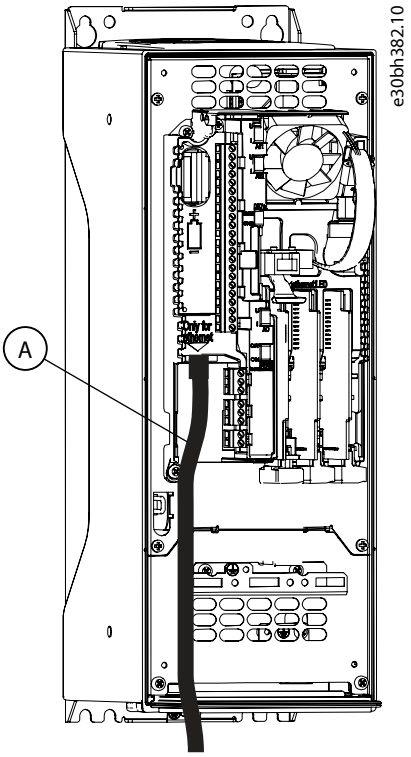

Figure 60: Ethernet Cable Installation Location

A	The Ethernet cable

2. Put the cover of the drive back.
3. Route the fieldbus cables away from other cables.

For more information, see the installation guide of the used fieldbus.

7.4.5 RS-485 Commissioning and Cabling

7.4.5.1 General Cabling Instructions for RS-485

Use only shielded cables with twisted-pair signal wires.

For example, the following cables are recommended:

- Lapp Kabel UNITRONICR BUS LD FD P A, part number 2170813 or 2170814
- Belden 9841

The plug type to be used is 2.5 mm^2 (AWG13).

The theoretical maximum cable length depends on baud rate. See the following table for suggested maximum cable lengths.

Table 16: The RS-485 Cable Lengths

Baud rate (kbit/s)	Length of line A (m)	Length of line B (m)
9.6	1200	1200
19.2	1200	1200
93.75	1200	1200
187.5	1000	600
500	400	200
1500	200	-
3000–12000	100	-

7.4.5.2 Grounding the Cable Shield

Equipotential bonding refers to using metal parts to make ground potential everywhere in the installation the same, the system ground. If the ground potential of all the devices is the same, it is possible to prevent current from flowing through paths that are not designed to have current. Cables can also be shielded efficiently.

An error in the equipotential bonding can cause bad quality or malfunction of the fieldbus communication. It is not easy to find an error in equipotential bonding. It is also not easy to correct errors in large installations after commissioning. Thus, in the planning phase it is important to plan the installation to get good equipotential bonding. In the commissioning phase, make the equipotential bonding connections carefully.

Do grounding with low HF impedance, for example, via backplane mounting. If ground connection wires are necessary, use wires that are as short as possible. Note that paint coating acts as an insulator on metal and prevents grounding. Remove paint coating before doing grounding.

This chapter describes the principles of cable shield grounding. Notice that the internal RS-485 fieldbus in VACON® 100 products does not have jumpers for grounding options.

Connect the cable shield directly to the frame of the drive (see Figure 61 and Figure 63).

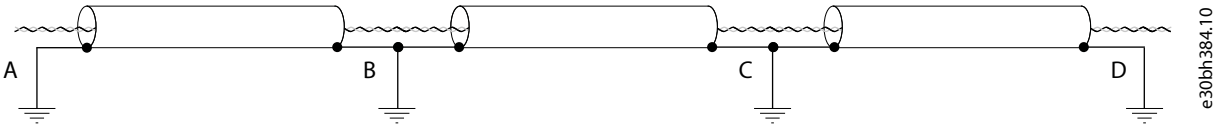

Figure 61: Grounding in Noisy Environment with Good Equipotential

If potentials at points A, B, C, and D are different and cannot be made similar, cut the shields as in Figure 62.

If the ground potentials of the connected devices are different, a cable shield that is connected at both ends causes current to flow in the shield. To avoid the current flow, the cable shield must be disconnected or cut at some point between the devices (see Figure 62).

When disturbances are strong, the cable shield can be exposed and then 360° grounded directly to the drive ground (see Figure 63). When the connection is made like in Figure 62, grounding must be done at a location nearest to the place where the disturbances meet the cable.

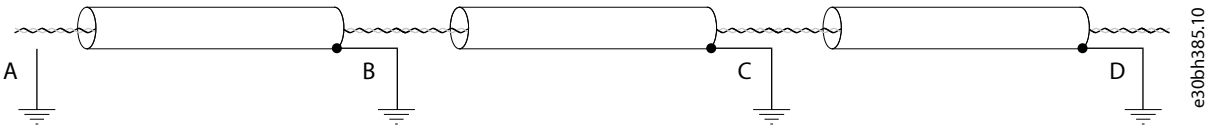

Figure 62: Grounding in Noisy Environment with Poor Equipotential, an Example of Cutting the Cable Shield

Ground the cable shield as in examples A and C (see Figure 63). Do not ground the cable shield as in example B.

Danfoss Drives Oy © 2026.11

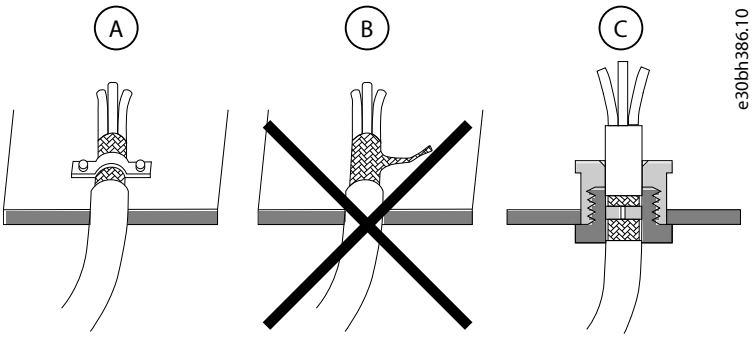

Figure 63: Grounding the Cable Shield

A	Cable clamp	B	Ground terminal
C	Cable gland		

7.4.5.3 RS-485 Bus Biasing

When no device on the RS-485 bus line transmits data, all devices are in an idle state. In such conditions, the bus voltage is in an indefinite state, usually near 0 V, because of the termination resistors. The indefinite state can cause problems in character reception because the RS-485 standard considers the voltage interval from -200 mV to +200 mV as an undefined state. Thus, bus biasing is necessary to keep the voltage in state '1' (above +200 mV) also between the messages.

Unless the first and last device in the RS-485 bus line have a built-in bus biasing function, a separate active termination resistor specially designed for the RS-485 bus must be added (for example, Siemens active RS-485 terminating element 6ES7972-0DA00-0AA0).

7.4.5.4 Using Fieldbus through an RS-485 Cable

1. Remove approximately 15 mm (0.59 in) of the gray shield of the RS-485 cable. Do this for the 2 fieldbus cables.
   a. Strip the cables for approximately 5 mm (0.20 in) to put them in the terminals. Do not keep more than 10 mm (0.39 in) of the cable outside the terminals.

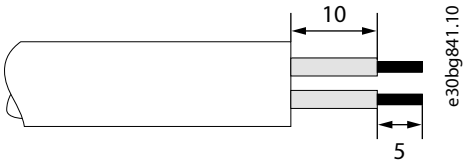

Figure 64: Stripping the Ends of the Cables

   b. Strip the cable at such a distance from the terminal that it can be attached to the frame with the grounding clamp for the control cable. Strip the cable at a maximum length of 15 mm (0.59 in). Do not remove the aluminum shield of the cable.

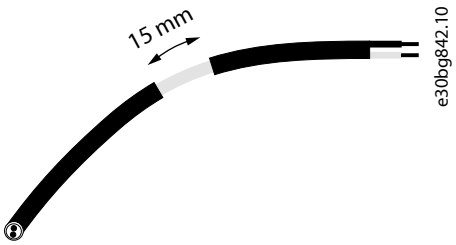

Figure 65: Stripping the Cable for Grounding

2. Connect the cable to the default I/O board of the drive, in terminals A and B.
   - A = negative
   - B = positive

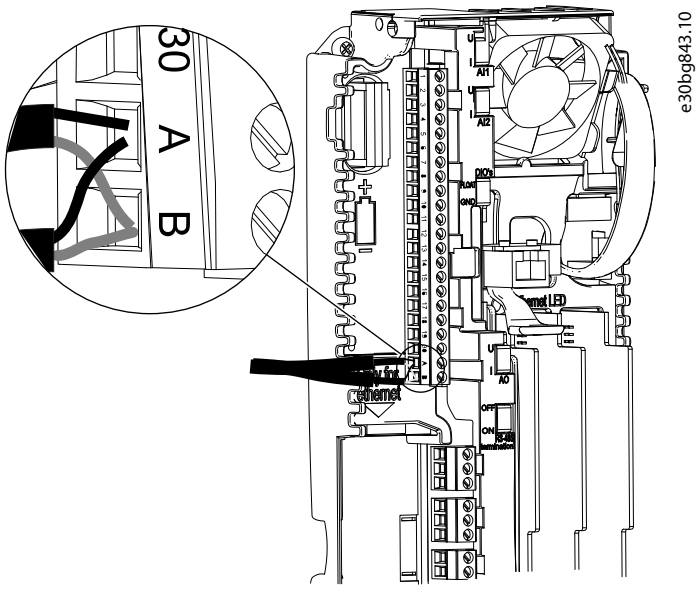

Figure 66: Terminals A and B on the I/O Board

3. Attach the shield of the cable to the frame of the drive with a grounding clamp for the control cable to make a grounding connection.

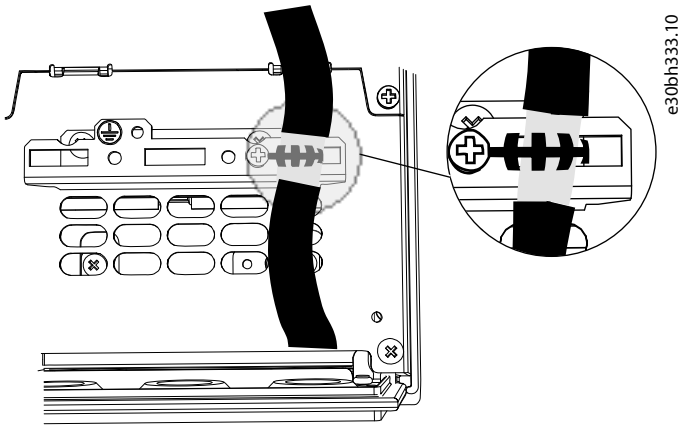

Figure 67: Grounding the Cable with a Grounding Clamp

4. If the drive is the last device on the fieldbus line, set the bus termination. Set the bus termination for the first and the last device of the fieldbus line. It is recommended that the first device on the fieldbus is the master device.
   a. Find the DIP switches on the left side of the control unit of the drive.

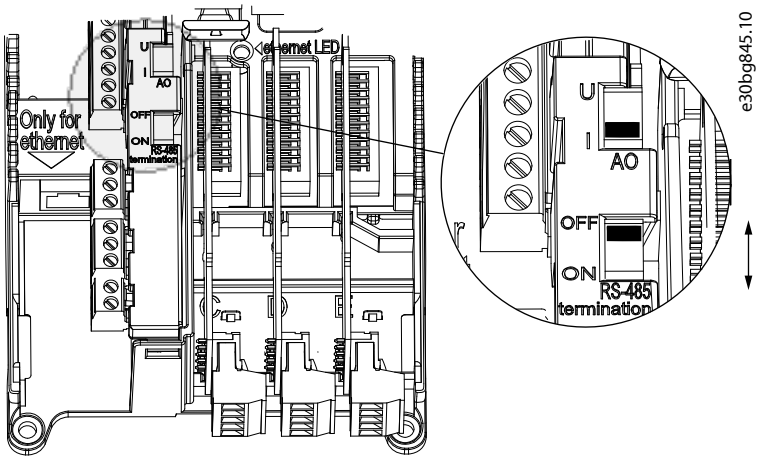

Figure 68: Location of the DIP Switches

Danfoss Drives Oy © 2026.11

b. Set the DIP switch of the RS-485 bus termination to the ON position.

The termination resistors are placed at both ends of the fieldbus line to decrease signal reflections on the line. Biasing is built in the bus termination resistor. The termination resistance is 220 Ω.

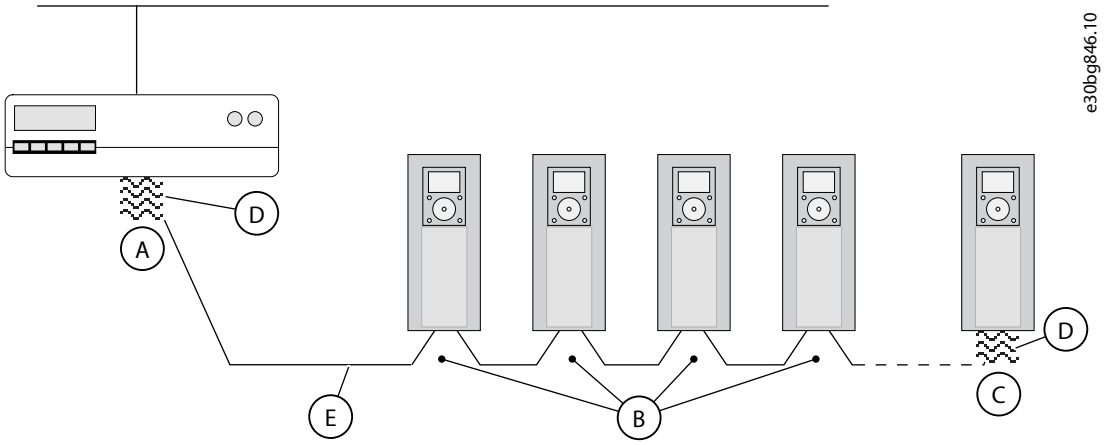

Figure 69: Setting the Bus Termination for a Fieldbus Line

A	The termination is activated	B	The termination is deactivated
C	The termination is activated with a DIP switch	D	The bus termination. The resistance is 220 Ω.
E	The fieldbus		

NOTICE

LOSS OF TERMINATION RESISTANCE

If the last device on the fieldbus line is powered down, the termination resistance is lost. The loss of termination resistance causes signal reflections on the line, which can disrupt the fieldbus communication.

- Do not power down the last device on the fieldbus line while the fieldbus is active.

5. Put the cover of the drive back. Route the RS-485 cables to the side.
   a. Keep the distance of the Ethernet, I/O, and Fieldbus cables from the motor cable at a minimum of 30 cm (11.81 in).
   b. Move the fieldbus cables away from the motor cable.

7.5 Available Option Boards

Table 17: Option Boards and their Correct Option Slots

The option board	The name of the option board	The correct slot or slots
OPTB1	The I/O expander board	C, D, E
OPTB2	The Thermistor relay board	C, D, E
OPTB4	The I/O expander board	C, D, E
OPTB5	The Relay board	C, D, E
OPTB9	The I/O expander board	C, D, E
OPTBF	The I/O expander board	C, D, E
OPTBH	The Temperature measurement board	C, D, E
OPTBJ	The Safe Torque Off board	E

Table 17: Option Boards and their Correct Option Slots - (continued)

The option board	The name of the option board	The correct slot or slots
OPTC4	The LonWorks fieldbus board	D, E
OPTE2	The RS-485 (Modbus/N2) fieldbus board	D, E
OPTE3	The PROFIBUS DP-V1 fieldbus board	D, E
OPTE5	The PROFIBUS DP-V1 fieldbus board (with a type D connector)	D, E
OPTE6	The CANopen fieldbus board	D, E
OPTE7	The DeviceNet fieldbus board	D, E
OPTE8	The RS-485 (Modbus/N2) fieldbus board (with a type D connector)	D, E
OPTE9	The Dual-port Ethernet fieldbus board	D, E
OPTEA	The Advanced dual-port Ethernet fieldbus board	D, E
OPTEC	The EtherCAT fieldbus board	D, E

7.6 Installing the Option Boards

1. Open the door of the control compartment.

⚠ WARNING



SHOCK HAZARD FROM CONTROL TERMINALS

The control terminals can have a dangerous voltage also when the drive is disconnected from DC supply. A contact with this voltage can lead to injury.

- Make sure that there is no voltage in the control terminals before touching the control terminals.

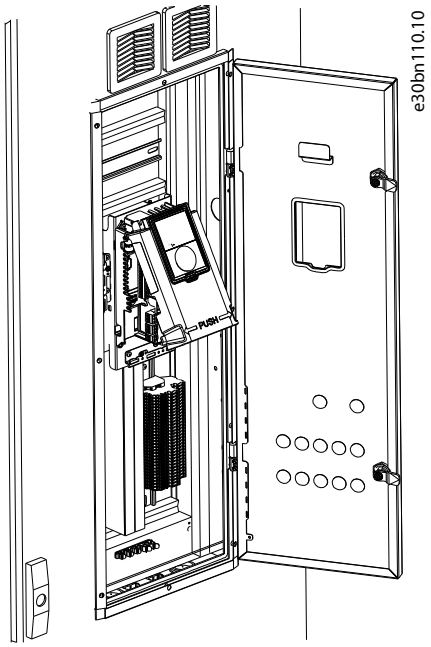

2. For OPTB and OPTC options boards, ensure that the label says "dv" (dual voltage) which shows that the option board is compatible with the drive.

IMPORTANT: It is not possible to install option boards that are incompatible with the drive.

Danfoss Drives Oy © 2026.11

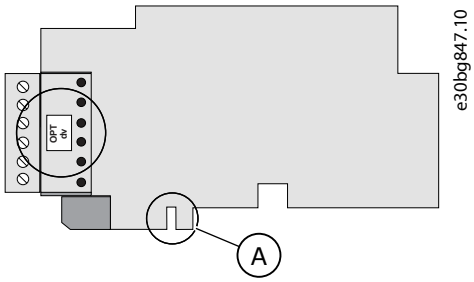

A	Slot coding

3. To access the option option slots, open the cover of the control unit.

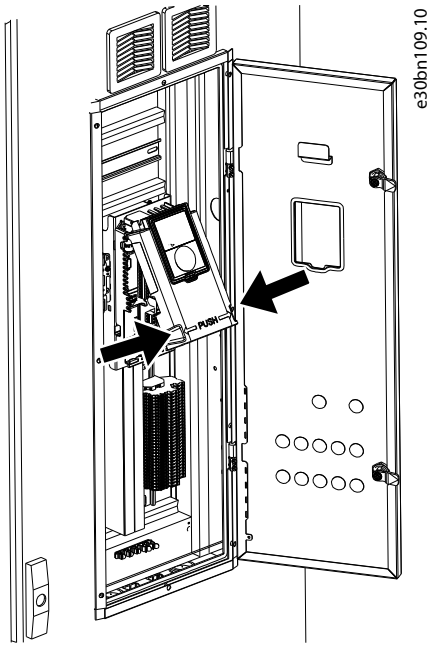

4. Install the option board into the correct slot: C, D, or E.

The option board has a slot coding for easy selection of the correct slot.

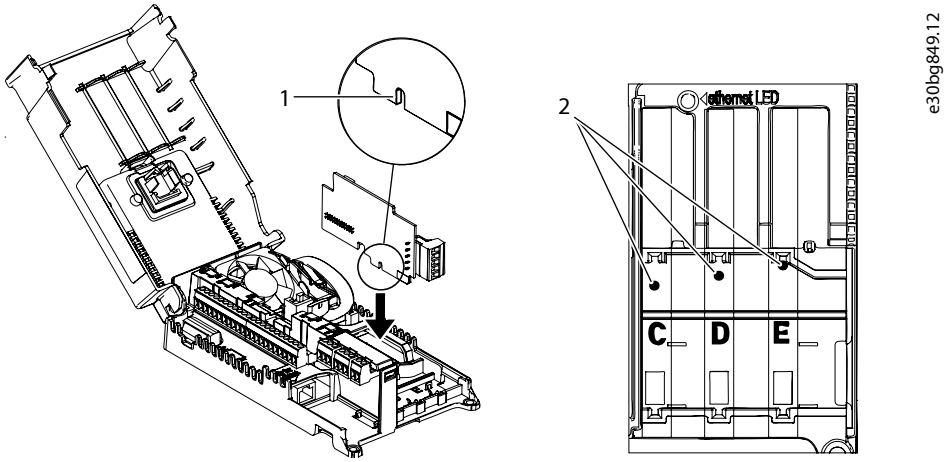

A	Slot coding	B	Option option slots

5. Close the cover of the control unit. Close the door of the control compartment.

7.7 Battery for the Real-time Clock (RTC)

To use the real-time clock (RTC), a battery must be installed in the left side of the control unit. See 7.2 Control Unit Components. Use a ½ AA battery with 3.6 V and a capacity of 1000–1200 mAh. Use, for example, a Vitzrocell SB-AA02 battery.

The battery lasts approximately 10 years. See more about the functions of the RTC in the application guides.

7.8 Description of the Control Panel

7.8.1 Control Panel and the Keypad

The control panel is the interface between the drive and the user. With the control panel, it is possible to control the speed of a motor and monitor the status of the drive. It is also possible to set the parameters of the drive.

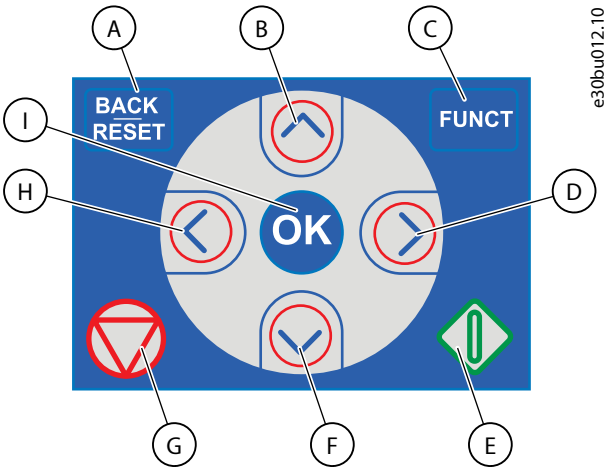

Figure 70: Buttons of the VACON® 100 Keypad

A	The [BACK/RESET] button. Use it to move back in the menu, exit the Edit mode, reset a fault.	B	The arrow button UP. Use it to scroll up the menu and to increase a value.
C	The [FUNCT] button. Use it to change the rotation direction of the motor, access the control page, and change the control place.	D	The arrow button RIGHT.
E	The START button.	F	The arrow button DOWN. Use it to scroll the menu down and to decrease a value.
G	The STOP button.	H	The arrow button LEFT. Use it to move the cursor left.
I	The [OK] button. Use it to go into an active level or item, or to accept a selection.		

7.8.2 Displays of the Control Panel

There are 2 display types: the graphical display and the text display. The control panel always has the same keypad and buttons.

The display shows this data.

- The status of the motor and the drive.
- Faults in the motor and in the drive.
- Your location in the menu structure.

If the text in the text display is too long for the display, the text scrolls to show the full text string. Some functions are only available in the graphical display.

Danfoss Drives Oy © 2026.11

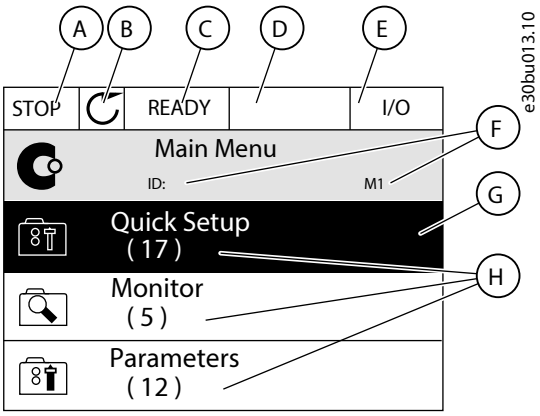

Figure 71: Graphical Display of the Control Panel

A	The first status field: *STOP/RUN*	B	The rotation direction of the motor
C	The second status field: *READY/NOT READY/FAULT*	D	The alarm field: *ALARM/-*
E	The control place field: *PC/I/O/KEYPAD/ FIELDBUS*	F	The location field: the ID number of the parameter and the current location in the menu
G	An activated group or item	H	The number of items in the group in question

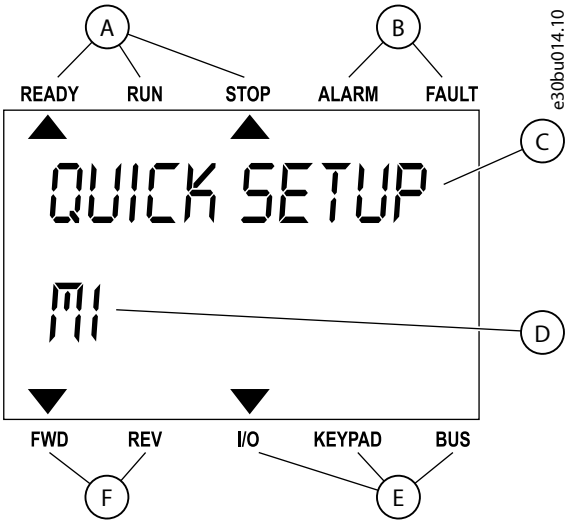

Figure 72: Text Display of the Control Panel

A	The indicators of status	B	The indicators of alarm and fault
C	The name of the group or item of the current location	D	The current location in the menu
E	The indicators of the control place	F	The indicators of the control place

See more information in the VACON® 100 INDUSTRIAL and VACON® 100 FLOW Application Guides.

8 Commissioning

8.1 Safety Checks before Starting the Commissioning

Before starting the commissioning, read these warnings.

DANGER



SHOCK HAZARD FROM POWER UNIT COMPONENTS

The components of the power unit are live when the drive is connected to mains. A contact with this voltage can lead to death or serious injury.

- Do not touch the components of the power unit when the drive is connected to mains.
- Before connecting the drive to mains, make sure that the covers of the drive are closed.

DANGER



SHOCK HAZARD FROM TERMINALS

The motor terminals U, V, W, the brake resistor terminals, or the DC terminals are live when the drive is connected to mains, also when the motor does not operate. A contact with this voltage can lead to death or serious injury.

- Do not touch the motor terminals U, V, W, the brake resistor terminals, or the DC terminals when the drive is connected to mains.
- Before connecting the drive to mains, make sure that the covers of the drive are closed.

DANGER



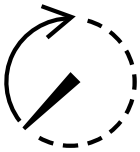

SHOCK HAZARD FROM DC LINK OR EXTERNAL SOURCE

The terminal connections and the components of the drive can be live several minutes after the drive is disconnected from the mains and the motor has stopped. The load side of the drive can also generate voltage. Contact with voltage can lead to death or serious injury.

- Do not touch the main circuit of the drive or the motor before the system is powered off and grounded.
- Disconnect the drive from the mains and ensure that the motor has stopped.
- Disconnect the motor.
- Lock out and tag out the power source to the drive.
- Ensure that no external source generates unintended voltage during work.
- Ground the drive for work.
- Wait for the capacitors to discharge fully before opening the door or the cover of the drive. Refer to the label on the drive for the correct discharge time. If the device is broken or fuses have blown, the discharge time is longer.
- Use a suitable measuring device to make sure that there is no voltage in the drive.

  Before and after the measurement, verify the correct operation of the voltage tester on a known voltage source.

  Confirm that there is no voltage between the power terminals (input, output, and DC) and ground (PE).

  Confirm that there is no voltage between the DC terminals (DC+ and DC-).

Danfoss Drives Oy © 2026.11

⚠ WARNING



SHOCK HAZARD FROM CONTROL TERMINALS

The control terminals can have a dangerous voltage also when the drive is disconnected from DC supply. A contact with this voltage can lead to injury.

- Make sure that there is no voltage in the control terminals before touching the control terminals.

8.2 Commissioning the Drive

Prerequisites:

Read the safety instructions in 2.2 Safety Precautions and 8.1 Safety Checks before Starting the Commissioning, and obey them.

Follow these instructions to commission the drive.

1. Make sure that the motor is installed correctly.
2. Make sure that the motor is not connected to mains.
3. Make sure that the drive and the motor are grounded.
4. Make sure to select the mains cable, the brake cable, and the motor cable correctly.

   For information on cable selections, see:

   - 6.1.1 Main Circuit Diagrams of the Enclosed Drives
   - 6.1.3 Recommendations for Cable and Fuse Sizes, IEC, 6.1.4 Recommendations for Cable and Fuse Sizes, UL, and related tables
   - 6.2.1 EMC-compliant Installation
5. Make sure that the control cables are as far as possible from the power cables. See 6.4.1 Preparation of the Cable Installation.
6. Make sure that the shields of the shielded cables are connected to a grounding terminal that is identified with the PE symbol.
7. Check the tightening torques of all the terminals.
8. Make sure that no power correction capacitors are connected to the motor cable.
9. Make sure that the cables do not touch the electrical components of the drive.
10. Make sure that the common inputs of the digital input groups are connected to +24 V or ground of the control terminal or the external power source.
11. Check the quality and quantity of the cooling air.

    For further information on cooling requirements, see:

    - 5.2 Cooling and Free Space around the Drive
    - 5.3 Using the Back Channel for Cooling
12. Make sure that there is no condensation on the surfaces of the drive.
13. Make sure that there are no unwanted objects in the installation space.
14. Before connecting the drive to mains, check the installation and the condition of all the fuses (see 10.3.1 List of Cable and Fuse Size Information) and other protective devices.

8.3 Insulation Measurements

8.3.1 Measuring the Cable and Motor Insulation

Do these checks if necessary. The drive is already measured at the factory.

- The insulation checks of the motor cable, see 8.3.2 Measuring the Insulation Resistance of the Motor Cable

- The insulation checks of the mains cable, see 8.3.3 Measuring the Insulation Resistance of the Mains Cable
- The insulation checks of the motor, see 8.3.4 Measuring the Insulation Resistance of the Motor

8.3.2 Measuring the Insulation Resistance of the Motor Cable

Use these instructions to check the insulation of the motor cable.

The drive is already measured at the factory.

1. Disconnect the motor cable from the terminals U, V, and W, and from the motor.
2. Measure the insulation resistance of the motor cable between phase conductors 1 and 2, between phase conductors 1 and 3, and between phase conductors 2 and 3.
3. Measure the insulation resistance between each phase conductor and the grounding conductor.
4. The insulation resistance must be >1 MΩ at the ambient temperature of 20 °C (68 °F).

8.3.3 Measuring the Insulation Resistance of the Mains Cable

Use these instructions to check the insulation of the mains cable.

The drive is already measured at the factory.

1. Disconnect the mains cable from the terminals L1, L2, and L3, and from mains.
2. Measure the insulation resistance of the mains cable between phase conductors 1 and 2, between phase conductors 1 and 3, and between phase conductors 2 and 3.
3. Measure the insulation resistance between each phase conductor and the grounding conductor.
4. The insulation resistance must be >1 MΩ at the ambient temperature of 20 °C (68 °F).

8.3.4 Measuring the Insulation Resistance of the Motor

Use these instructions to check the insulation of the motor.

The drive is already measured at the factory.

IMPORTANT: Obey the instructions of the motor manufacturer.

1. Disconnect the motor cable from the motor.
2. Open the bridging connections in the motor connection box.
3. Measure the insulation resistance of each motor winding. The voltage must be the same or higher than the motor nominal voltage, but at least 1000 V.
4. The insulation resistance must be >1 MΩ at the ambient temperature of 20 °C (68 °F).
5. Connect the motor cables to the motor.
6. Do the final insulation check on the drive side. Put all phases together and measure to the ground.
7. Connect the motor cables to the drive.

8.4 Checking the Drive after Commissioning

Before starting the motor, do these checks.

Procedure

1. Make sure that all the START and STOP switches that are connected to the control terminals are in the STOP position.
2. Make sure that the motor can be started safely.
3. Activate the start-up wizard. See the relevant application guide.

Danfoss Drives Oy © 2026.11

4. Set the maximum frequency reference (that is, the maximum speed of the motor) to agree with the motor and the device that is connected to the motor.

9 Maintenance

9.1 Preventive Maintenance Recommendations

Generally, all technical equipment, including Danfoss drives, need a minimum level of preventive maintenance. To ensure trouble-free operation and long life of the drive, regular maintenance is recommended. It is also recommended as a good service practice to record a maintenance log with counter values, date, and time describing the maintenance and service actions.

Danfoss recommends the following inspections and service intervals for air-cooled drives/systems.

IMPORTANT: The service schedule for part replacements can vary depending on operating conditions. Under specific conditions, the combination of stressful operation and environmental conditions work together to reduce the lifetime of the components significantly. These conditions can include, for example, extreme temperature, dust, high humidity, hours of use, corrosive environment, and loading.

For operation in stressful conditions, Danfoss offers the DrivePro® Preventive Maintenance service. DrivePro® services extend the lifetime and increase the performance of the product with scheduled maintenance including customized part replacements. DrivePro® services are tailored to the specific application and operating conditions.

Table 18: Maintenance Schedule for Air-cooled Drives

Component	Inspection interval[1]	Service schedule[2]	Preventive maintenance actions
Installation			
Visual inspection	1 year	–	Check for the unusual, for example, for signs of overheating, aging, corrosion, and for dusty and damaged components.
Auxiliary equipment	1 year	According to manufacturer recommendations	Inspect equipment, switchgear, relays, disconnects, or fuses/circuit breakers. Examine the operation and condition for possible causes of operational faults or defects. The continuity check on fuses must be performed by trained service personnel.
EMC consideration	1 year	–	Inspect the wiring regarding the electromagnetic capability and the separation distance between control wiring and power cables.
Cable routing	1 year	–	Check for parallel routing of motor cables, mains wiring, and signal wiring. Avoid parallel routing. Avoid routing cables through free air without support. Check for aging and wearing of the cable insulation.
Control wiring	1 year	–	Check for tightness, damaged or crimped wires, or ribbon wires. Terminate the connections correctly with solid crimped ends. The use of shielded cables and grounded EMC plate, or a twisted pair is recommended.
Clearances	1 year	–	Check that the external clearances for proper airflow for cooling follow the requirements for the frame and product type. For clearances, refer to the local design regulations.
Sealing	1 year	–	Check that the sealing of the enclosure, the covers, and the cabinet doors are in good condition.
Corrosive environments	1 year	–	Conductive dust and aggressive gases, such as sulphide, chloride, and salt mist, can damage the electrical and mechanical components. Air filters do not remove airborne corrosive chemicals. Act based on the findings.
Drive			

Danfoss Drives Oy © 2026.11

Table 18: Maintenance Schedule for Air-cooled Drives - (continued)

Component	Inspection interval[1]	Service schedule[2]	Preventive maintenance actions
Programming	1 year	–	Check that the drive parameter settings are correct according to the motor, drive application, and I/O configuration. Only trained service personnel are allowed to perform this action.
Control panel	1 year	–	Check that the display pixels are intact. Check the event log for warnings and faults. Repetitive events are a sign of potential issues. If necessary, contact a local service center.
Drive cooling capacity	1 year	–	Check for blockages or constrictions in the air passages of the cooling channel. The heat sinks must be free of dust and condensation.
Capacitors, DC link	1 year	8–15+ years	The expected lifetime of the capacitors depends on the loading profile of the application and the ambient temperature. For applications with heavy loads in demanding environments or high ripple currents, replace electrolytic capacitors every 8 years and plastic foil capacitors every 12 years. If within the specifications of the drive type, replace every 10–15+ years. Only trained service personnel are allowed to perform this action.
Cleaning and filters	1 year	–	Clean the interior of the enclosure annually, and more frequently if necessary. The amount of dust in the filter or inside the enclosure is an indicator for when the next cleaning or filter replacement is required.
Fans	1 year	3–10 years	Inspect the condition and operational status of all cooling fans. With the power off, the fan axis should feel tight, and spinning the fan with a finger, the rotation should be almost silent and not have abnormal rotation resistance. When in RUN mode, fan vibration, excessive or strange noise is a sign of the bearings wearing, and the fan must be replaced.
Grounding	1 year	–	The drive system requires a dedicated ground wire connecting the drive, the output filter, and the motor to the building ground. Check that the ground connections are tight and free of paint or oxidation. Daisy-chain connections are not allowed. If applicable, braided straps are recommended.
PCB	1 year	10–12 years	Visually inspect the printed circuit boards for signs of damage or degrading due to aging, corrosive environments, dust, or environments with high temperatures. Only trained service personnel are allowed to perform the inspection and service action.
Power cables and wiring	1 year	–	Check for loose connections, aging, insulation condition, and proper torque to the drive connections. Check for proper rating of fuses and continuity check. Observe if there are any signs of operation in a demanding environment. For example, discoloration of the fuse housing can be a sign of condensation or high temperatures.
Vibration	1 year	–	Check for abnormal vibration or noise coming from the drive to ensure that the environment is stable for electronic components.
Insulator gaskets	1 year	10–15 years	Inspect the insulators for signs of degradation due to high temperature and aging. Replacement is based on findings or done at the same time as DC capacitor replacement. Only trained service personnel are allowed to perform this action.
Batteries	1 year	7–10 years	Replace the batteries according to the manufacturer recommendation. Replace the real-time clock battery in the control unit every 7–10 years.
Spare parts			

Table 18: Maintenance Schedule for Air-cooled Drives - (continued)

Component	Inspection interval[1]	Service schedule[2]	Preventive maintenance actions
Spare parts	1 year	2 years	Stock spares in their original boxes in a dry and clean environment. Avoid hot storage areas. Electrolytic capacitors require reforming as stated in the service schedule. The reforming must be performed by trained service personnel.
Exchange units and units stored for long periods before commissioning	1 year	2 years	Visually inspect for signs of damage, water, high humidity, corrosion, and dust within the visual field of view without disassembly. The exchange units with mounted electrolytic capacitors require reforming as stated in the service schedule. The reforming must be performed by trained service personnel.

1) Defined as the time after the commissioning/startup or the time from the previous inspection.

2) Defined as the time after the commissioning/startup or the time from the previous service schedule actions.

9.2 Replacing the Air Filter of the AC Drive

Clean or replace the filters of the cabinet regularly.

9.3 Replacing the Fans

9.3.1 Replacing the Fan Power Supply

1. Remove the cover of the drive.
2. Disconnect the cables from the fan power supply.
   a. Disconnect the fan supply cable from connector X81.
   b. Disconnect the fan driver cable from connector X61.
   c. Disconnect the DC supply cable from connector X8.

Remove the 4 screws that hold the fan power supply.

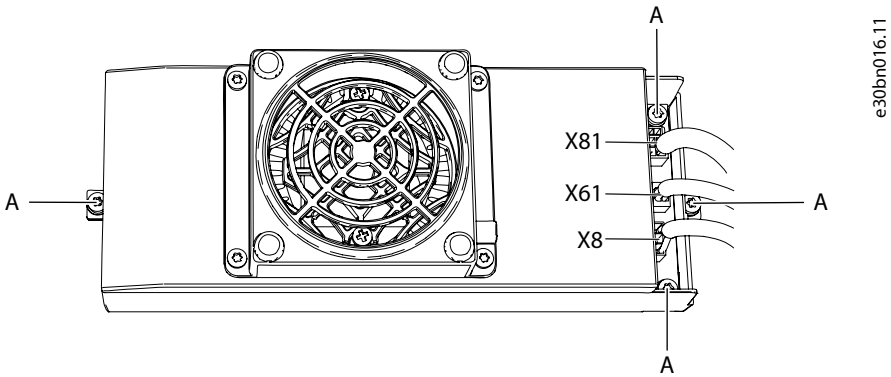

Figure 73: Replacing the Fan Power Supply

A	The 4 screws

3. Lift off the fan power supply.
4. Replace the fan power supply. Attach it with the screws.
5. Connect the cables and put the cover of the drive back.

Danfoss Drives Oy © 2026.11

9.3.2 Replacing the Main Fan, MR8

1. Remove the cover of the drive.
2. Remove the fan power supply. See 9.3.1 Replacing the Fan Power Supply.
3. Remove the 4 screws that hold the main fan unit. Lift off the main fan unit.

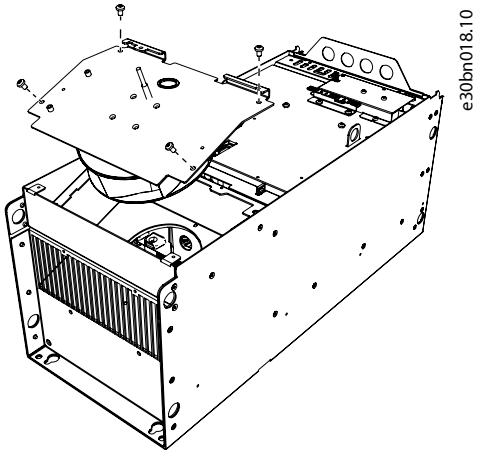

Figure 74: Replacing the Main Fan, MR8

4. To release the fan from the cover plate, remove the 4 screws.

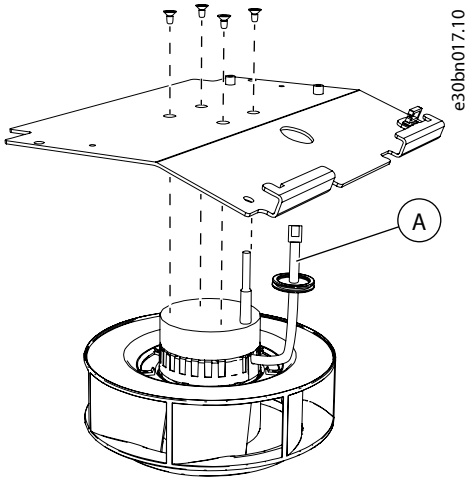

Figure 75: Release the Fan from the Cover Plate

A	Fan cable

5. Release the grommet on the fan cable from the cover plate and pull out the cable.
6. Replace the main fan. Attach the screws.
7. Reassemble the drive and connect the cables.

9.3.3 Replacing the Main Fan, MR9 and MR11

1. Remove the cover of the drive.
2. Disconnect the cables from the fan power supply.
3. Remove the 12 screws from the fan cover plate. Use the handle to lift off the main fan unit.

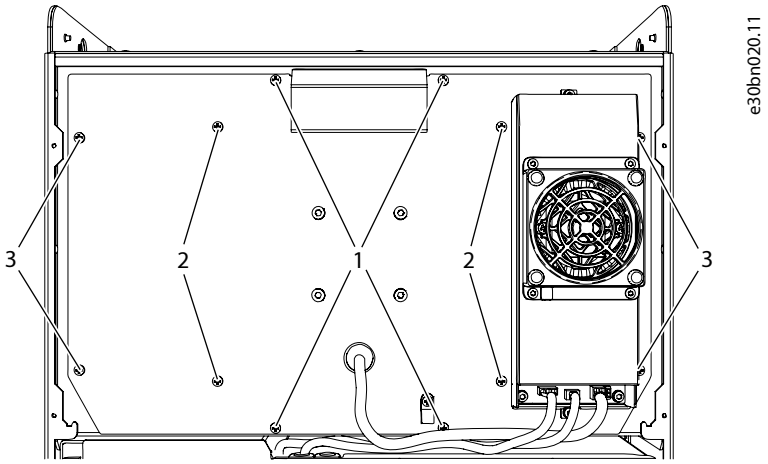

Figure 76: Remove the 12 Screws from the Fan Cover Plate

4. To release the fan from the cover plate, remove the 4 screws.

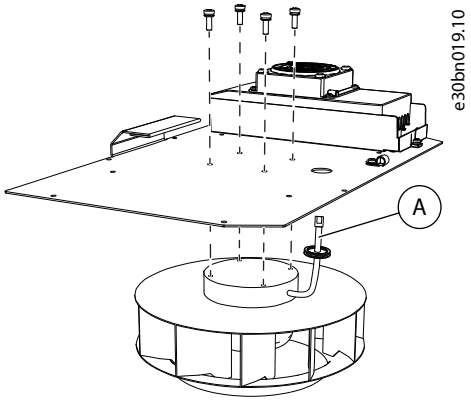

Figure 77: Release the Fan from the Cover Plate

A	The fan cable

5. Release the grommet on the fan cable from the cover plate and pull out the cable.
6. Replace the main fan.
   a. When reattaching the main fan unit, make sure that the sealing tape under the fan plate is in good condition.
   b. Attach the screws in the tightening order that is marked in the figure of the main fan unit (1 → 2 → 3).
7. Reassemble the drive and connect the cables.

9.3.4 Replacing the Door Fans, MR9B and MR11

1. Disconnect the cables from the fan.
2. Remove the 2 screws to release the fan from the door plate.
3. Replace the fan.
4. Install the new fan with 2 screws.

Danfoss Drives Oy © 2026.11

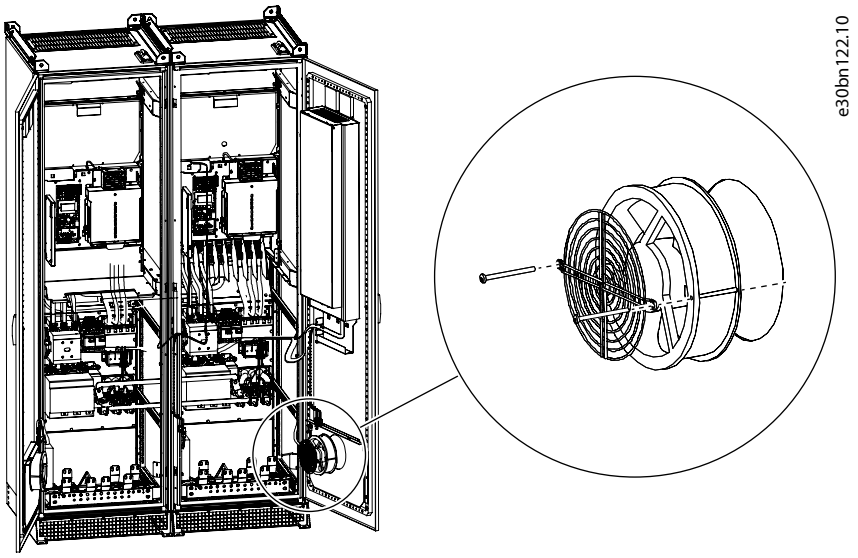

5. Connect the cables.

9.3.5 Replacing the Main Fan Assembly, MR10 and MR12

1. Loosen the 8 screws and lift off the service lid.

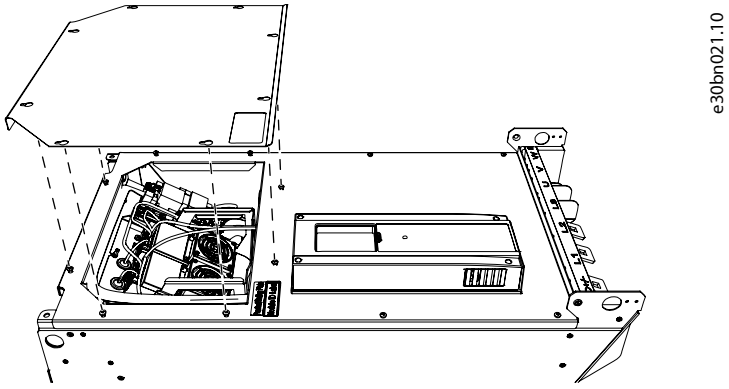

Figure 78: Loosen the 8 Screws and Lift off the Service Lid

2. Disconnect the cables from each fan power supply.
   a. Disconnect the fan driver cable from terminal X61.
   b. Disconnect the DC supply cable from terminal X8.

Remove the 5 screws.

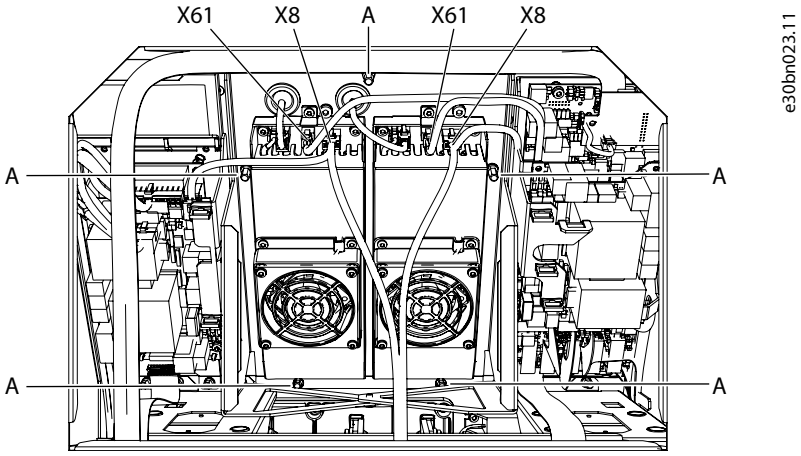

Figure 79: Disconnect the Cables from each Fan Power Supply

A	The 5 screws

3. Pull out the whole fan assembly.

The assembly weighs approximately 11 kg.

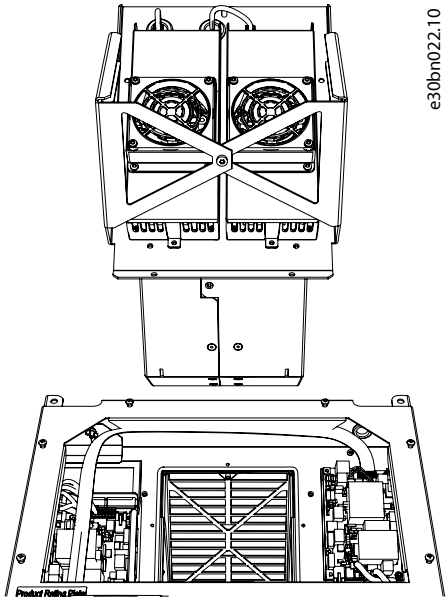

Figure 80: Pull out the Whole Fan Assembly

4. Replace the main fan assembly. Attach it with the screws.
5. Connect the cables and attach the service lid.

9.4 Replacing the Power Unit of the Enclosed Drive

9.4.1 Replacing the Power Unit, MR8

Danfoss Drives Oy © 2026.11

DANGER



SHOCK HAZARD

Replacing the power unit while voltage is on can cause death or serious injury.

- Before starting the replacement, switch off the voltage at the power source.

1. Remove the protective covers of the drive.
2. Disconnect all power cables from the bottom of the power unit.
3. Remove the 2 screws from the top of the power unit.

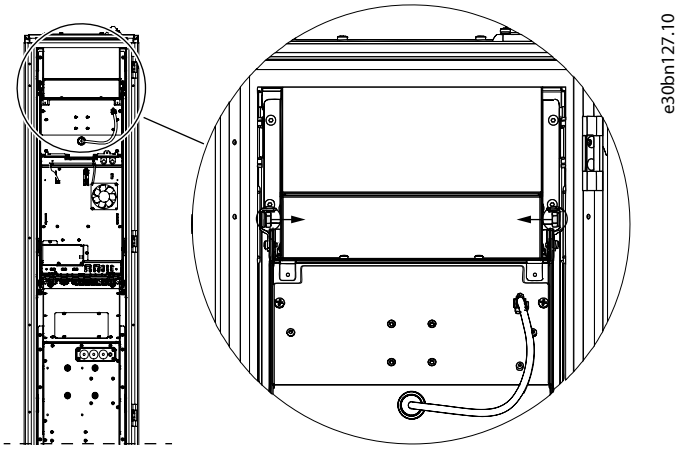

e30bn127.10

4. Remove the 6 screws from the bottom of the power unit.

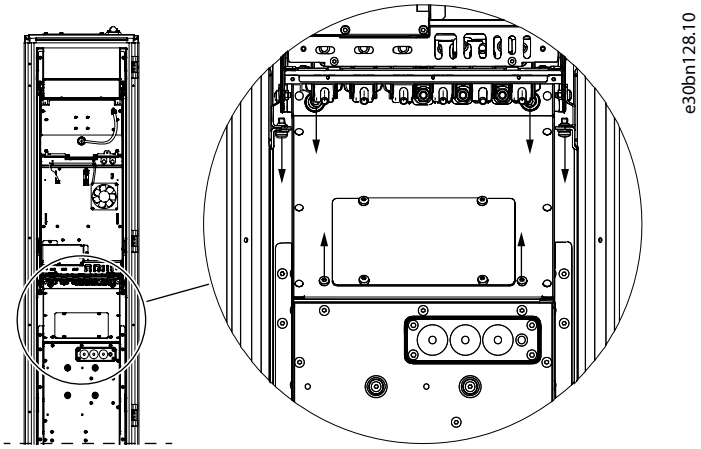

e30bn128.10

5. Carefully, pull the power unit out until It is possible to use the front lifting holes.
6. Attach the lifting hooks to the front lifting holes and lift the power unit out of the cabinet.

NOTICE

SWINGING HAZARD DURING LIFTING

If the power unit falls off the cabinet rails and/or swings uncontrollably, it can cause injury to personnel and/or damage to the equipment.

- Before lifting the power unit, make sure that the lifting ropes are tight and properly attached.
- Secure the lifting area.
- Lift the product slowly and carefully.

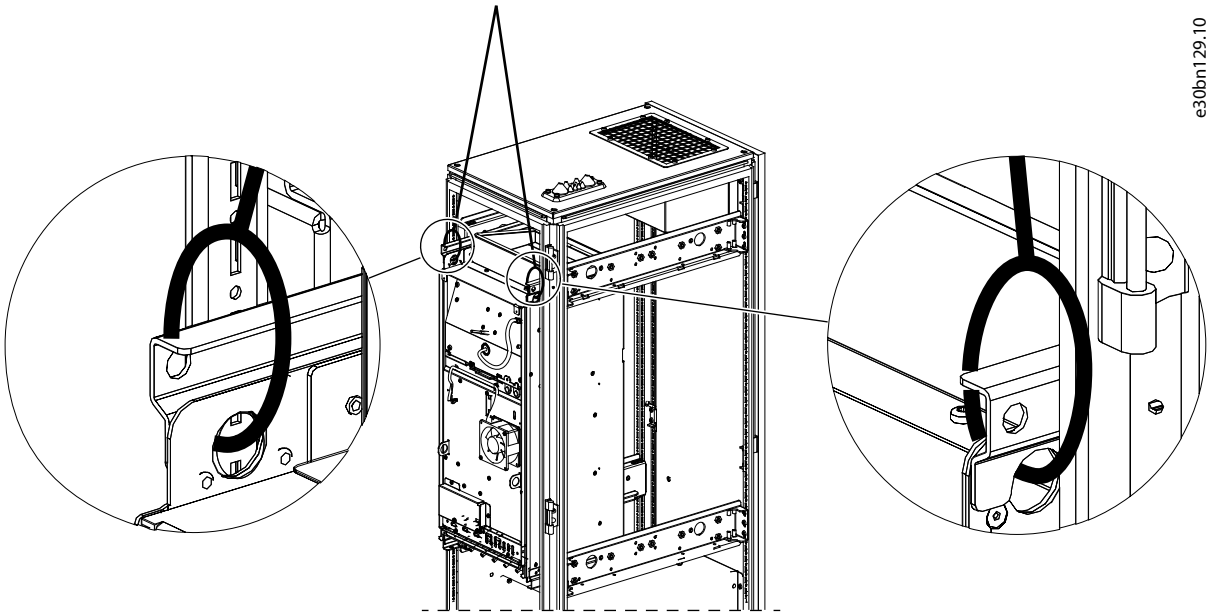

9.4.2 Replacing the Power Unit, MR9 and MR11

DANGER



SHOCK HAZARD

Replacing the power unit while voltage is on can cause death or serious injury.

- Before starting the replacement, switch off the voltage at the power source.

1. Remove the protection covers of the drive.
2. Loosen the 8 screws on the touch protection and remove the protection.

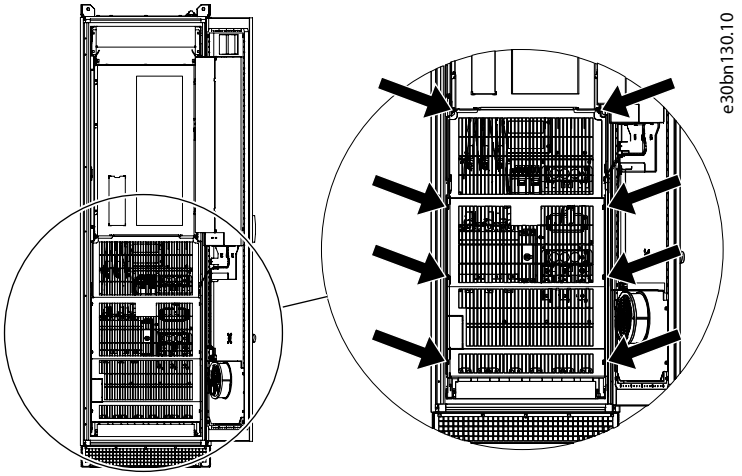

3. In MR9B, remove the 6 screws holding the air guide plate (3 on each side), and lift away the plate.

Danfoss Drives Oy © 2026.11

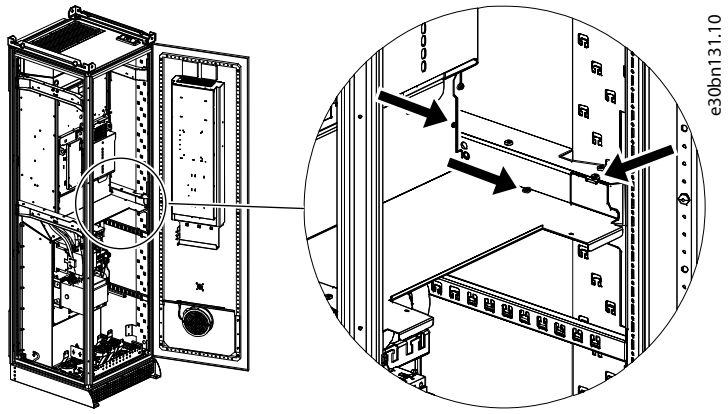

4. Disconnect all the power cables from the bottom of the power unit.
5. Remove the 2 screws and the lifting lugs from the top of the power unit. Keep the screws and lugs for later reattachment.

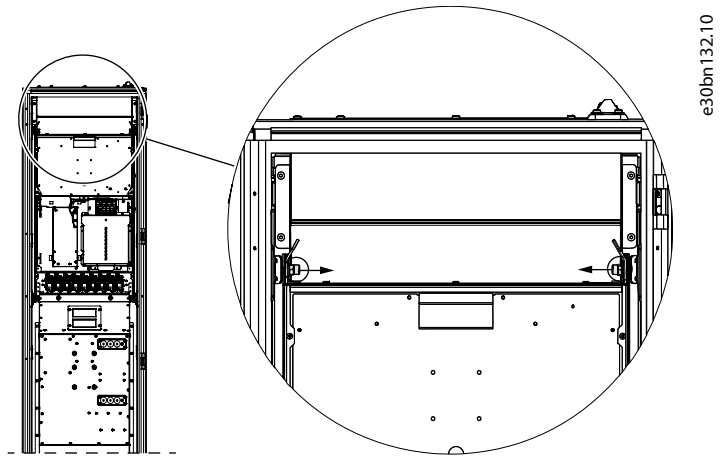

6. Remove the 8 screws from the bottom of the power unit.

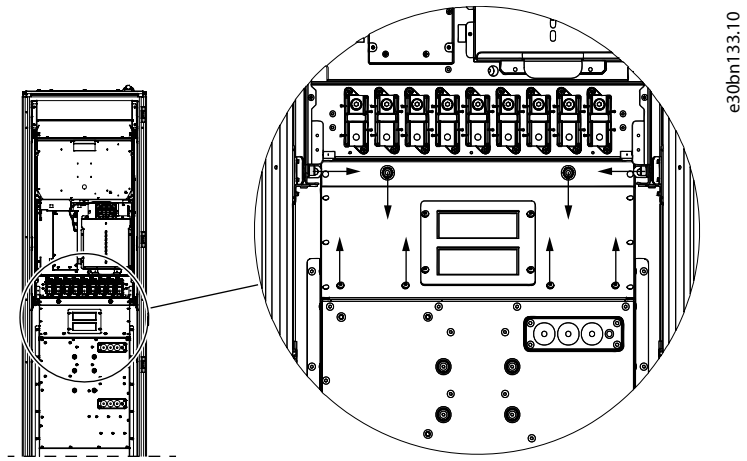

7. Carefully, pull the power unit out until it is possible to re-attach the lifting lugs.
8. Re-attach the lifting lugs by taking the extra nut from the screw and place it on the other side of the lifting lug.

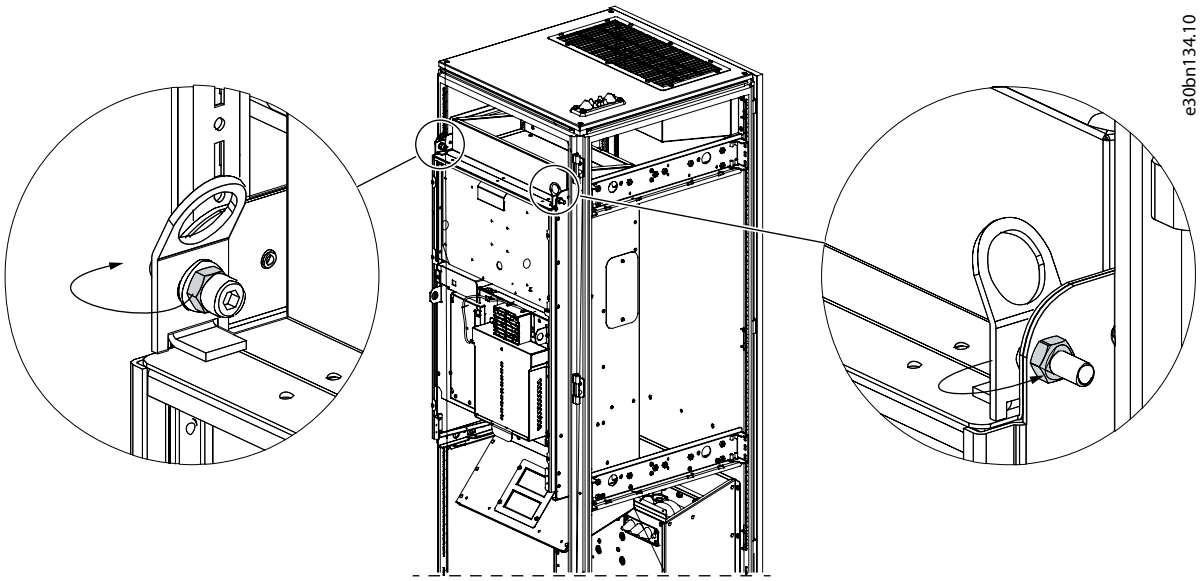

9. Attach the lifting hooks to the lifting lugs and lift the power unit out of the cabinet.

NOTICE

SWINGING HAZARD DURING LIFTING

If the power unit falls off the cabinet rails and/or swings uncontrollably, it can cause injury to personnel and/or damage to the equipment.

- Before lifting the power unit, make sure that the lifting ropes are tight and properly attached.
- Secure the lifting area.
- Lift the product slowly and carefully.

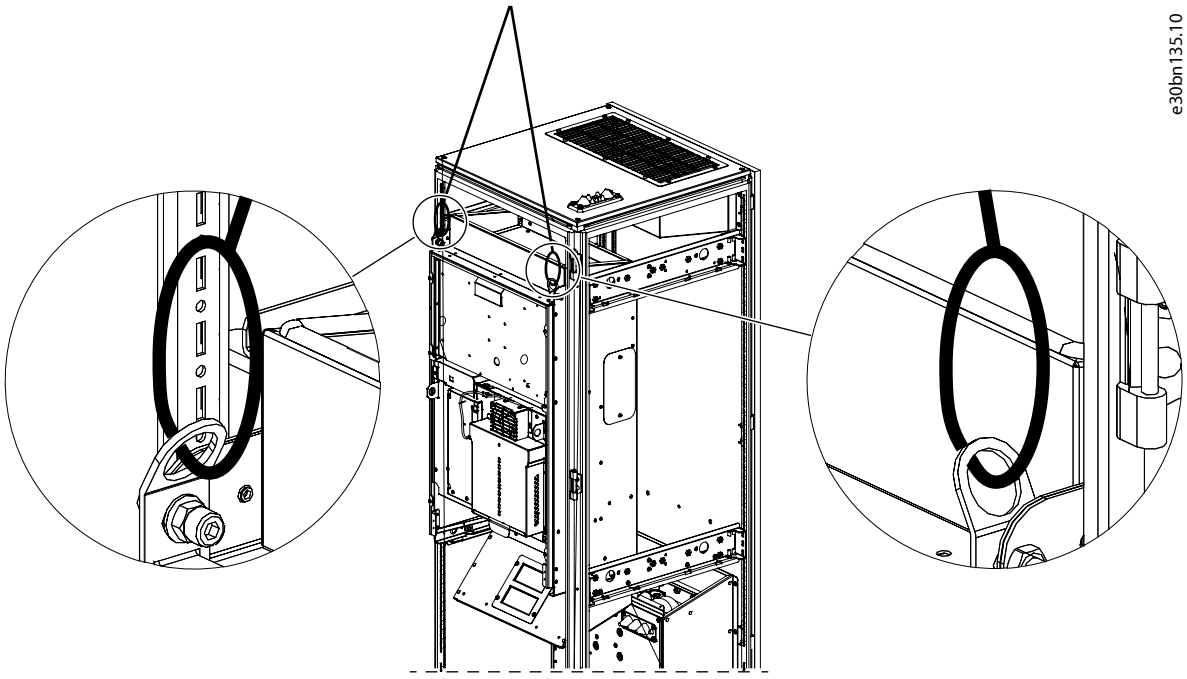

9.4.3 Replacing the Power Unit, MR10 and MR 12

Danfoss Drives Oy © 2026.11

DANGER

SHOCK HAZARD

Replacing the power unit while voltage is on can cause death or serious injury.

- Before starting the replacement, switch off the voltage at the power source.

1. Remove the protective covers of the drive.

   In MR12, do these steps for each cabinet.

2. Remove the 4 screws of the lower cover of the power unit and remove the cover.

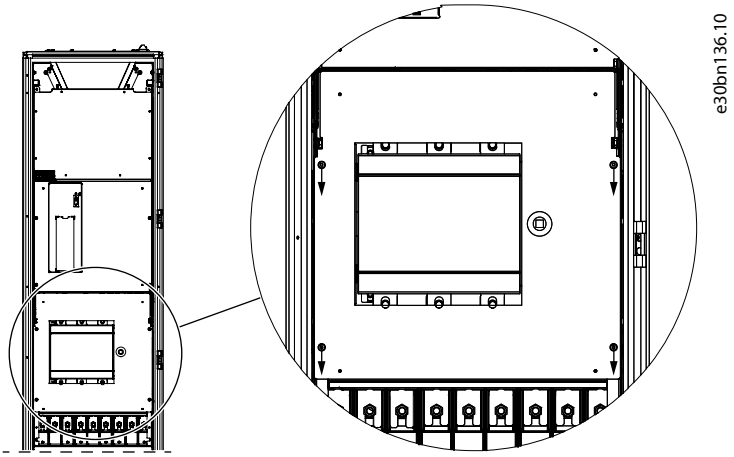

3. Disconnect all power cables from the bottom of the power unit.
4. Remove the 2 screws from the top of the power unit.

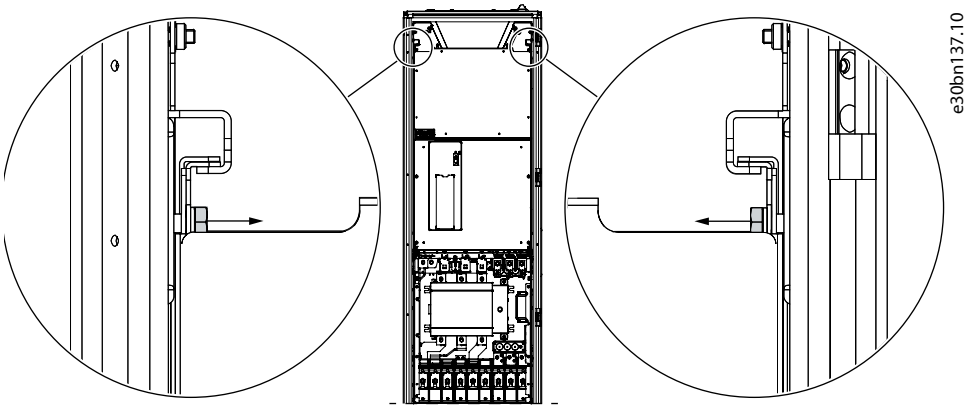

5. Remove the 2 screws from the bottom of the power unit.

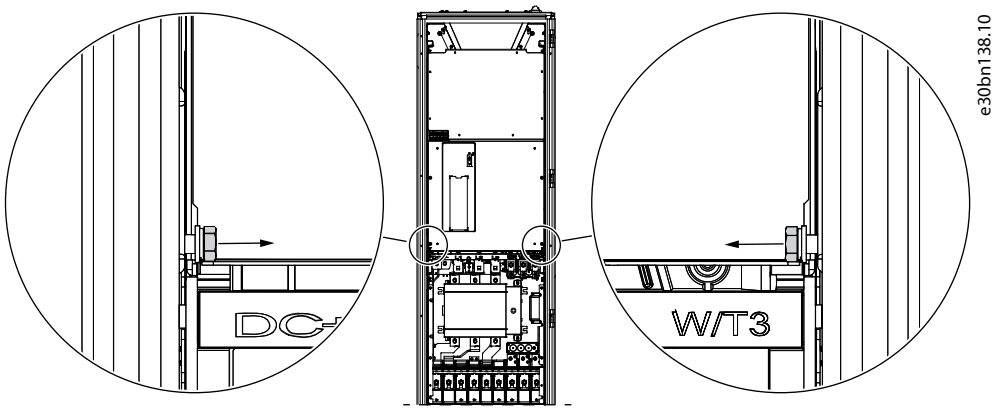

6. Pull the power unit out carefully until the front lifting holes are available.
7. Attach the lifting hooks to the front lifting holes and lift the power unit out of the cabinet.

NOTICE

SWINGING HAZARD DURING LIFTING

If the power unit falls off the cabinet rails and/or swings uncontrollably, it can cause injury to personnel and/or damage to the equipment.

- Before lifting the power unit, make sure that the lifting ropes are tight and properly attached.
- Secure the lifting area.
- Lift the product slowly and carefully.

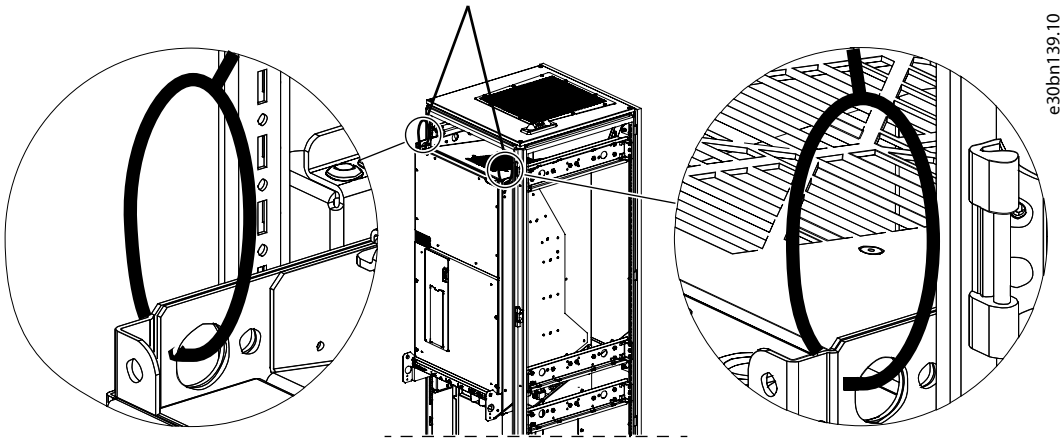

9.5 Downloading the Software with Mains Supply

When it is necessary to get a new version of the software of the drive, follow these instructions. For more information, contact Danfoss.

Before downloading the software, read the warnings in 2.2 Safety Precautions.

When the drive is supplied from mains, new software can be downloaded with the VACON® Loader PC tool and a CAB-USB/RS-485 cable.

1. To download a new software, connect the PC into the control panel connector with the CAB-USB/RS-485 cable.
    - The downloading time:
        - MR8 and MR9A: Approximately 6 minutes
        - MR9B and MR10: Approximately 12 minutes
        - MR11 and MR12: Approximately 25 minutes

Danfoss Drives Oy © 2026.11

If the drive is not supplied from mains, there are 2 alternatives to download the software.

- The first is to use the VACON® 100 Software Service Kit. The kit enables the power-up of the control board without the power-up of the drive, and enables downloading the software. Refer to the *VACON® 100 Software Service Kit User Manual* for more information. In MR10 and MR12, an external 24 V DC must also be connected to terminal X50 on the measurement board.
- The second alternative is to use a 24 V DC external supply. Refer to the instructions in 9.6 Downloading the Software without Mains Supply.

9.6 Downloading the Software without Mains Supply

When the drive is not supplied from mains, use a 24 V DC external supply to power up the control unit.

- MR8 and MR9A: The external 24 V DC powers up to the control unit.
- MR9B, MR10, MR11, and MR12: The external 24 V DC powers up to the control unit and the measurement board.

After the power-up, the software can be downloaded.

The requirements for the 24 V DC supply:

- Voltage accuracy: ±10%
- MR8–MR9A: >1000 mA
- MR9B–MR10: >2000 mA
- MR11–MR12: >4000 mA

1. In MR8 and MR9A, connect a 24 V DC external supply into the control terminals 13 and 30. Connect the external GND potential into terminal 13, and the external 24 V DC (+) potential into terminal 30.
2. In MR9B, MR10, MR11, and MR12, the 24 V DC external supply must be connected to the measurement board. To access the measurement board, remove the following covers.

   In MR11 and MR12, there are two power units. Do the steps 2 and 3 for the two power units.

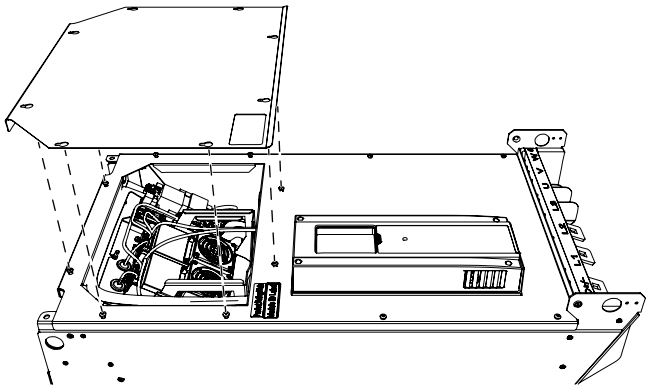

Figure 81: Removing the Service Lid of MR10

   a. In MR9B and MR11, remove the cover of the power unit. Remove the sealing plate and the control plate.
   b. In MR10 and MR12, loosen the 8 screws of the service lid and remove it.
3. In MR9B, MR10, MR11, and MR12, connect an external 24 V DC into terminal X50 on the measurement board. The terminal pins are X50-22 (+) and X50-23 (-).
   a. In MR9B, MR10, MR11, and MR12, connect the external 24 V DC to the two X50 terminals.

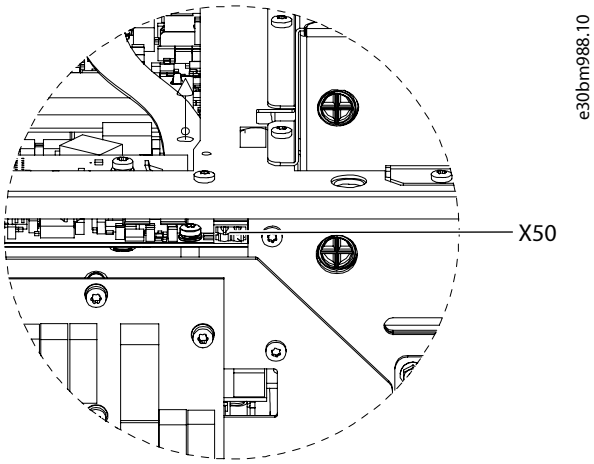

Figure 82: Terminal X50, MR9B and MR11

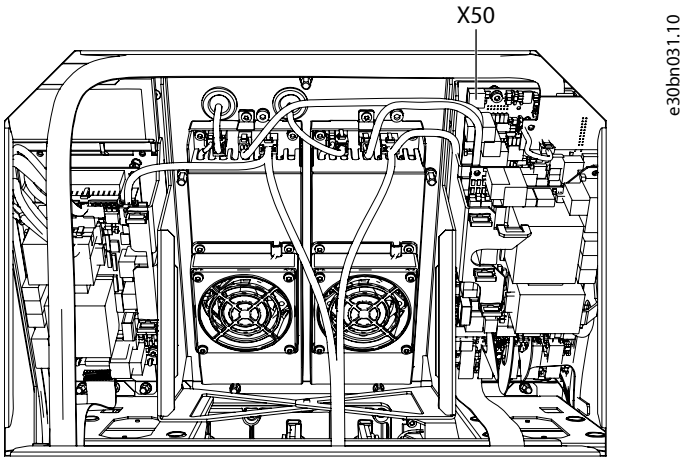

Figure 83: Terminal X50, MR10 and MR12

IMPORTANT: The size of the power supply wire for the external 24 V DC must be a minimum of 1 mm^2. The length of the wire from the 24 V DC supply to the X50 terminals and to the control unit connectors must be a maximum of 3 m (9.84 ft).

4. In all the enclosure sizes, power up the 24 V DC external supply.
5. Remove the control panel. Connect the PC to the control panel connector in the control unit with a CAB-USB/RS-485 cable.
6. Start the VACON® Loader PC tool.
7. Start the downloading of the software.
8. After the downloading is complete, disconnect the PC and attach the control panel into the control unit.
9. Power down the 24 V DC external supply.
10. In MR8 and MR9B, disconnect the 24 V DC external supply wires from the terminals (unless the control unit of the drive is normally supplied with a 24 V DC external supply).
11. In MR9B, MR10, MR11, and MR12, disconnect the external 24 V DC wires from the X50 terminal of the measurement board.

    In MR11 and MR12, disconnect the external 24 V DC wires from the X50 terminals of both power units.

12. In MR9B, MR10, MR11, and MR12, attach the covers to the power unit.

    In MR11 and MR12, attach the covers to both power units.

Danfoss Drives Oy © 2026.11

DANGER



SHOCK HAZARD FROM TERMINALS

The terminals of the drive are live when the drive is connected to mains. Contact with voltage can lead to death or serious injury.

- Before connecting the drive to mains, make sure that the front cover and the cable cover of the drive are closed.

13. After the downloading procedure is complete, start the start-up wizard (see the relevant application guide).

10 Specifications

10.1 Weight of the Enclosed Drive

The weights of the various enclosure sizes differ. It can be necessary to use a lifting device to move the drive from its package.

Table 19: Default Weights of the Enclosed Drives and Some Options

Enclosure size	The enclosed drive, IP21/IP54, without options [kg]	Common-mode filter + dU/dt filter [kg]	Any of the cabling-from-top options [kg]
MR8	200	30	65
MR9	280	40	65
MR10	420	40	80
MR11	545	40	80
MR12	825	80	95

10.2 Dimensions

10.2.1 Dimensions of the Cabinet, IEC

IEC = The product is qualified to the IEC criteria.

The dimension specifications required for cabling are in the order-specific documents.

IMPORTANT: The height of the standard base pedestal is 100 mm (4 in), but the height of the base pedestal option (+CHPH) is 200 mm (8 in).

Danfoss Drives Oy © 2026.11

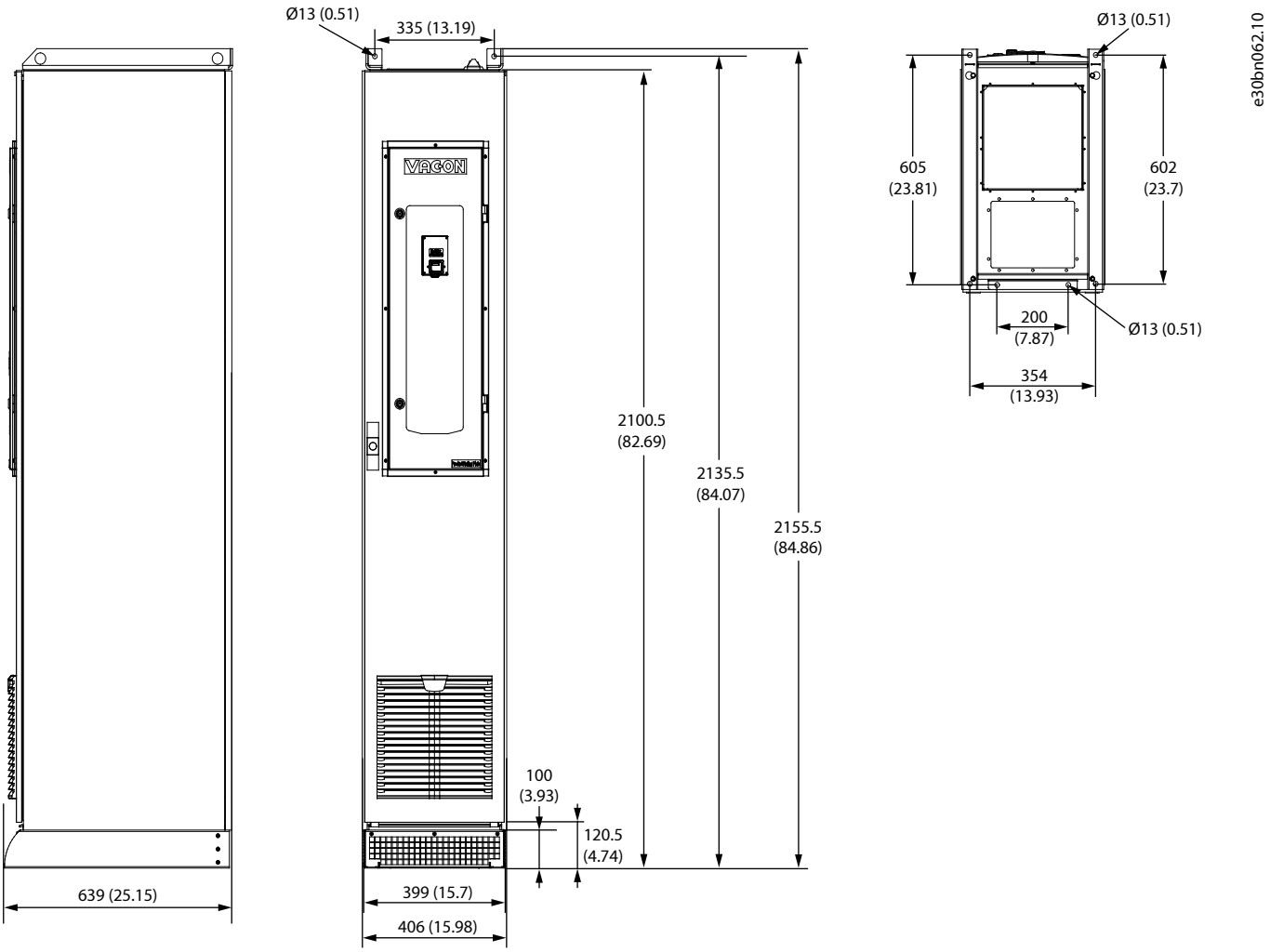

Figure 84: Dimensions of MR8 Cabinet, IEC

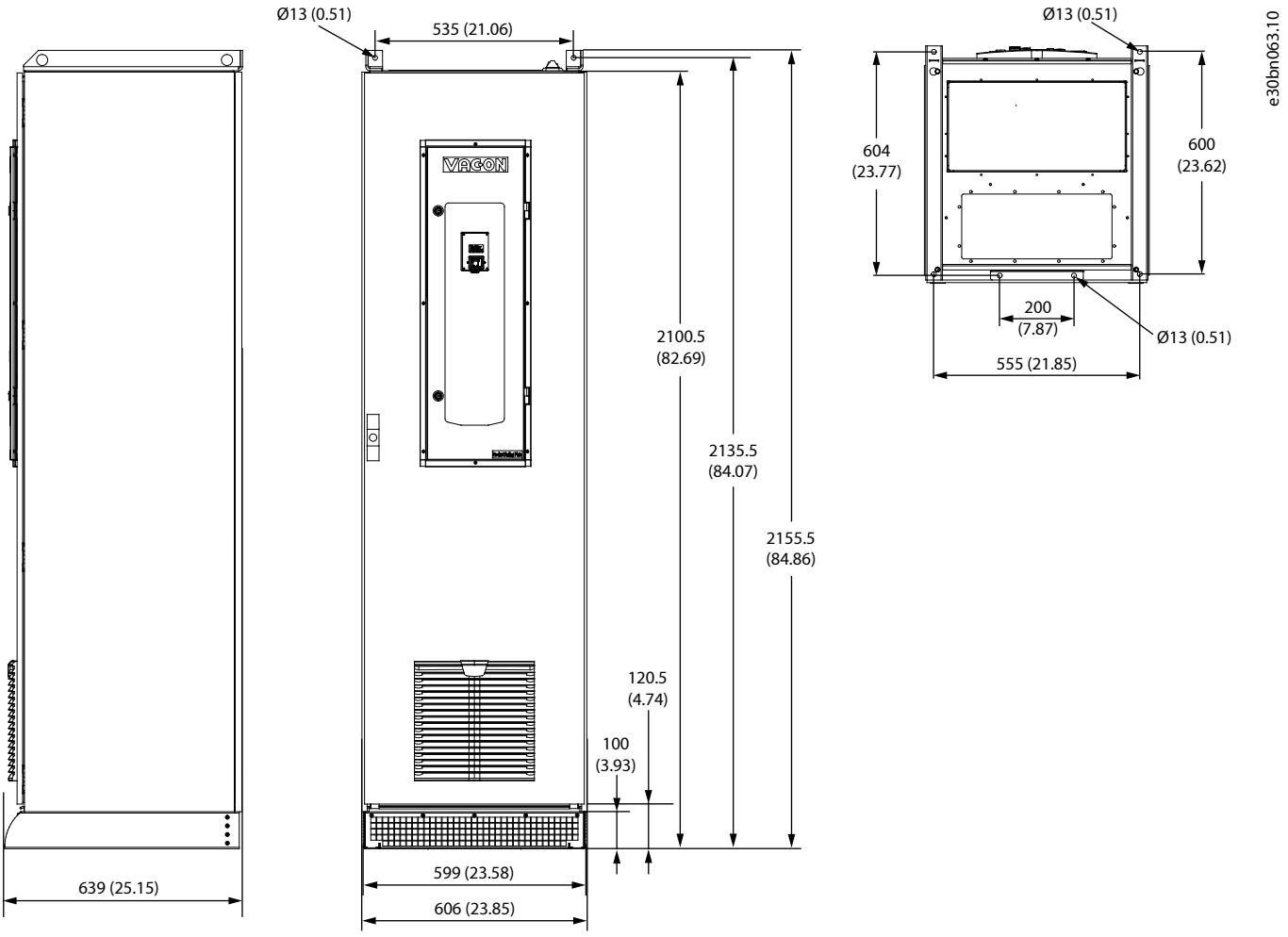

Figure 85: Dimensions of MR9 and MR10 Cabinets, IEC

Danfoss Drives Oy © 2026.11

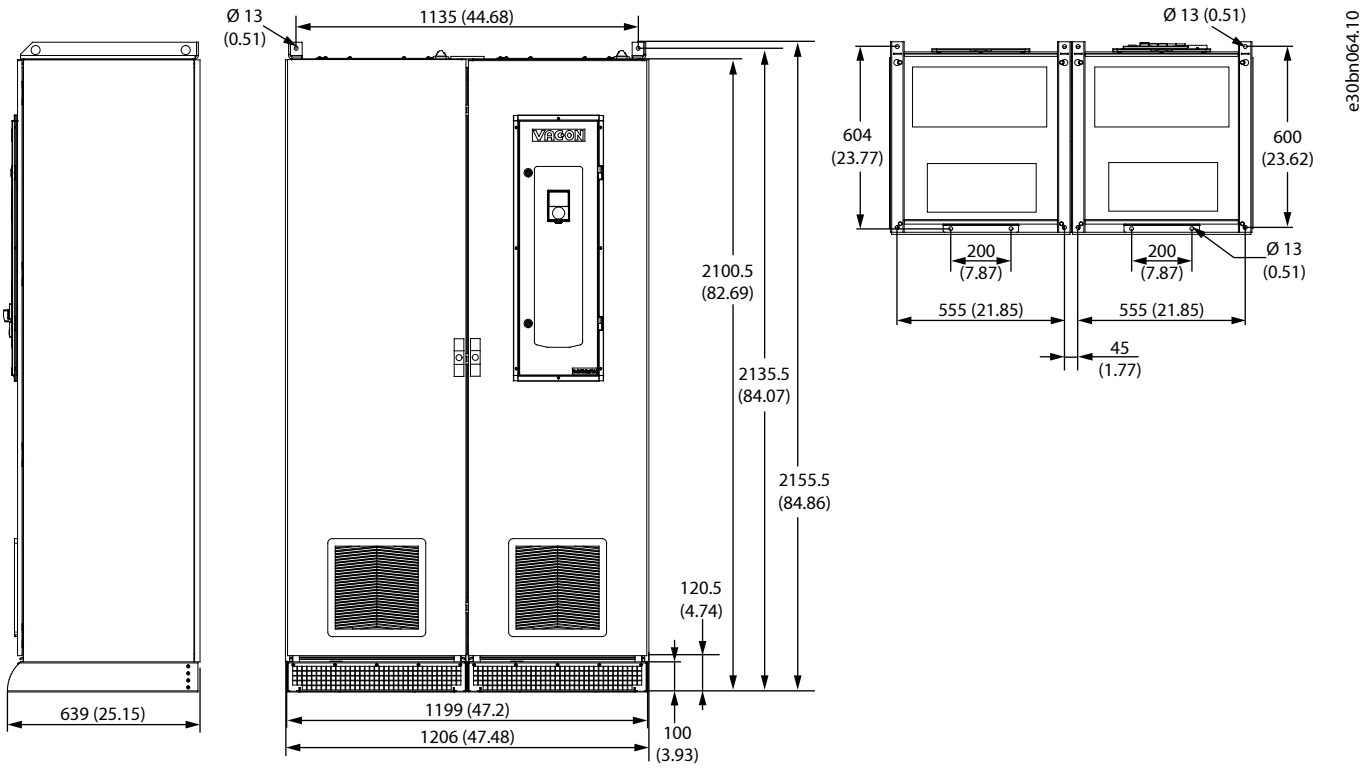

Figure 86: Dimensions of MR11 and MR12 Cabinets, IEC

10.2.2 Dimensions of the Cabinet with Additional Cabinet Sections, IEC

IEC = The product is qualified to the IEC criteria.

The dimension specifications required for cabling are in the order-specific documents.

Table 20: Width of the Additional Cabinet Section [mm (in)]

Enclosure size	With input contactor (+CICO)	With +CHIT, +CHOT, or +CHCT[1]	With +CICO and +CHIT, +CHOT, or +CHCT[1]
MR8	–	400 (15.7)	400 (15.7)
MR9	–	400 (15.7)	400 (15.7)
MR10, maximum 385 A	–	400 (15.7)	400 (15.7)
MR10, minimum 416 A	600 (23.6)	400 (15.7)	600 (23.6)
MR11	–	600 (23.6)	600 (23.6)
MR12, maximum 750 A	–	600 (23.6)	600 (23.6)
MR12, minimum 820 A	600 (23.6)	600 (23.6)	600 (23.6)

1) Input cabling from top (+CHIT), output cabling from top (CHOT), or cabling from top (+CHCT).

IMPORTANT: The height of the standard base pedestal is 100 mm (4 in), but the height of the base pedestal option (+CHPH) is 200 mm (8 in).

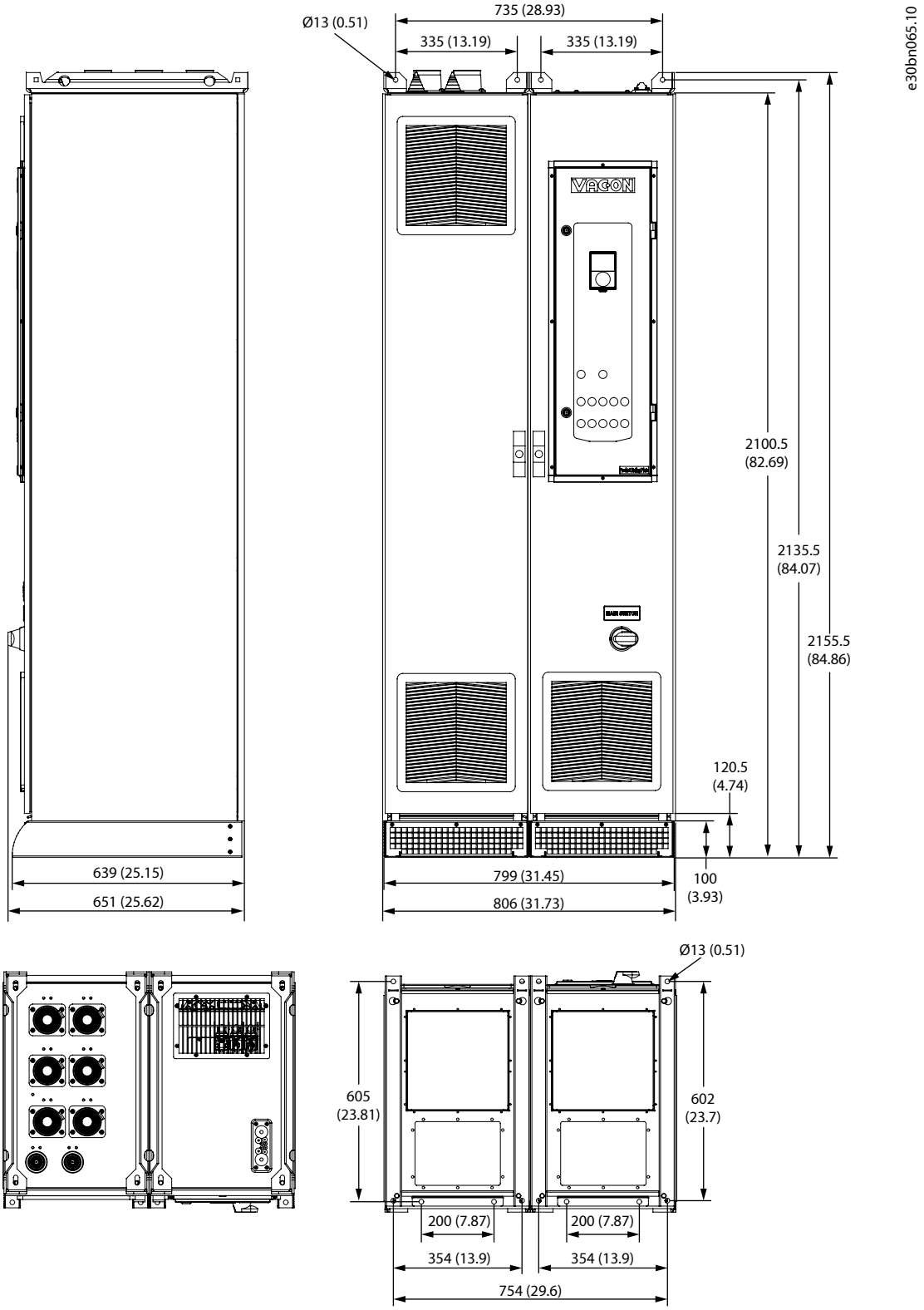

Figure 87: Dimensions of MR8 Cabinet with Optional Cabling from Top, IEC

Danfoss Drives Oy © 2026.11

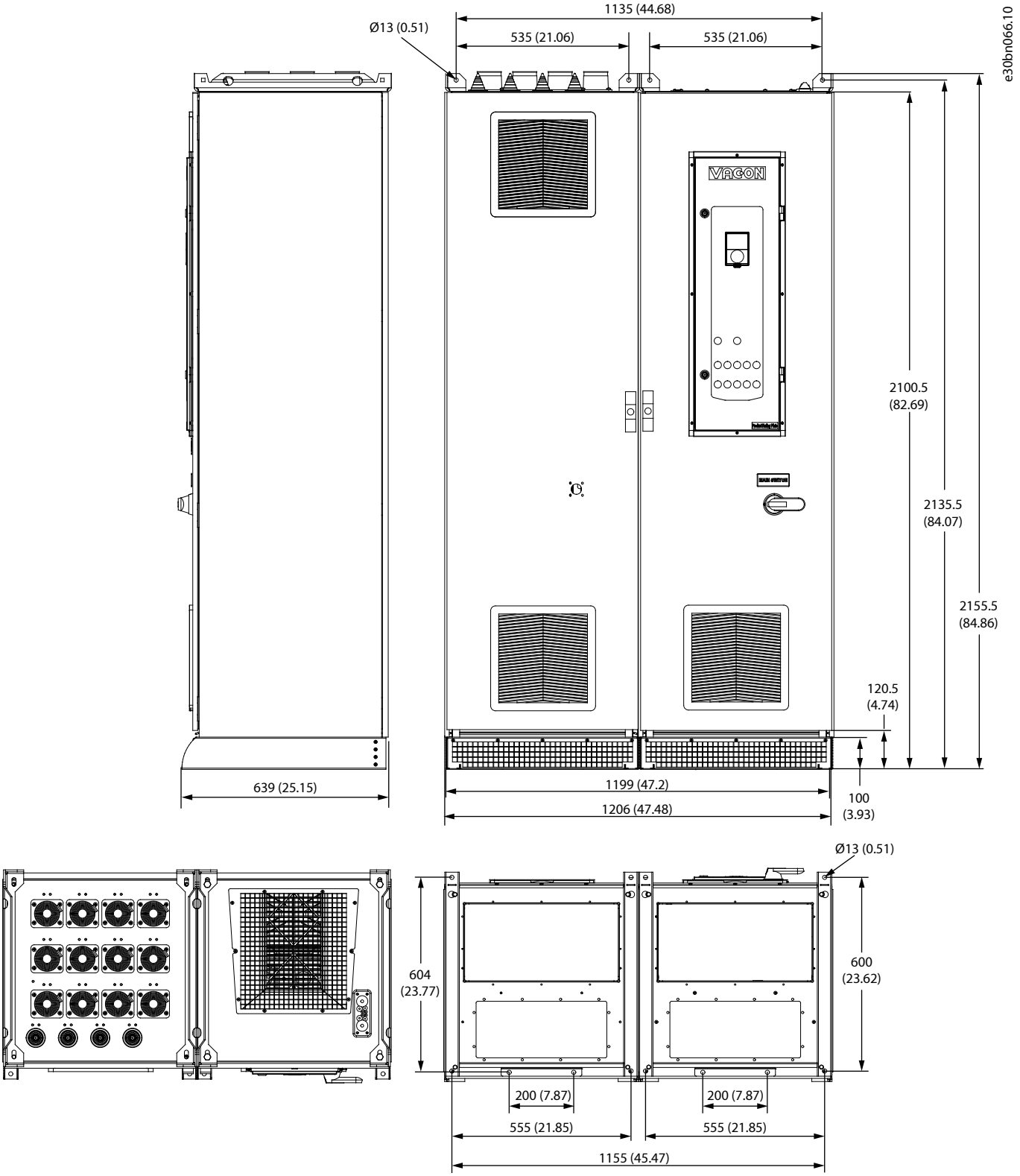

Figure 88: Dimensions of MR10 Cabinet, Minimum 416 A, with Optional Cabling from Top and Input Contactor, IEC

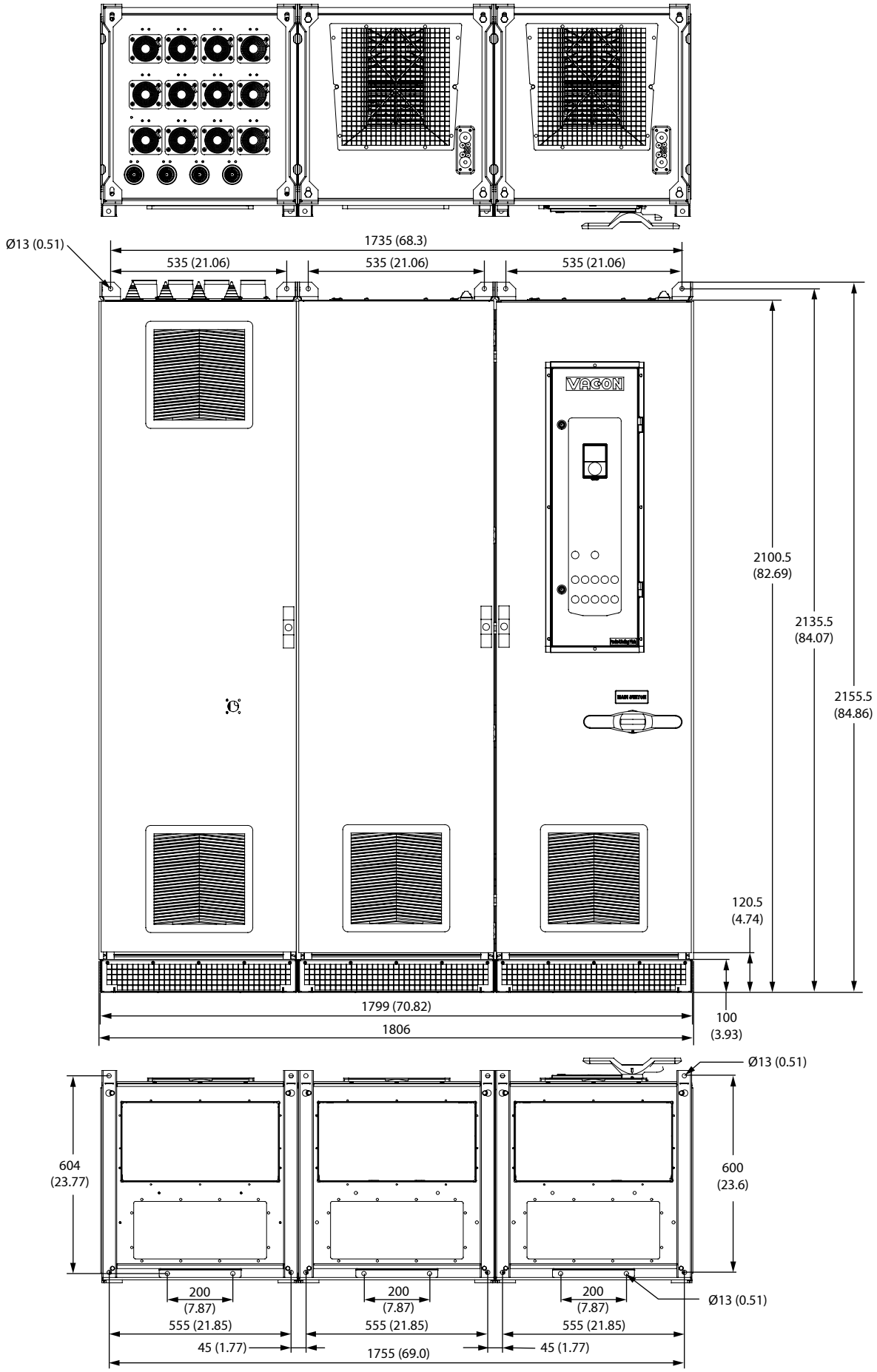

Figure 89: Dimensions of MR11 and MR12 Cabinets with Optional Cabling from Top and/or Input Contactor, IEC

Danfoss Drives Oy © 2026.11

10.2.3 Dimensions of the Cabinet, NAM

NAM = The product is qualified to the UL criteria.

The dimension specifications required for cabling are in the order-specific documents.

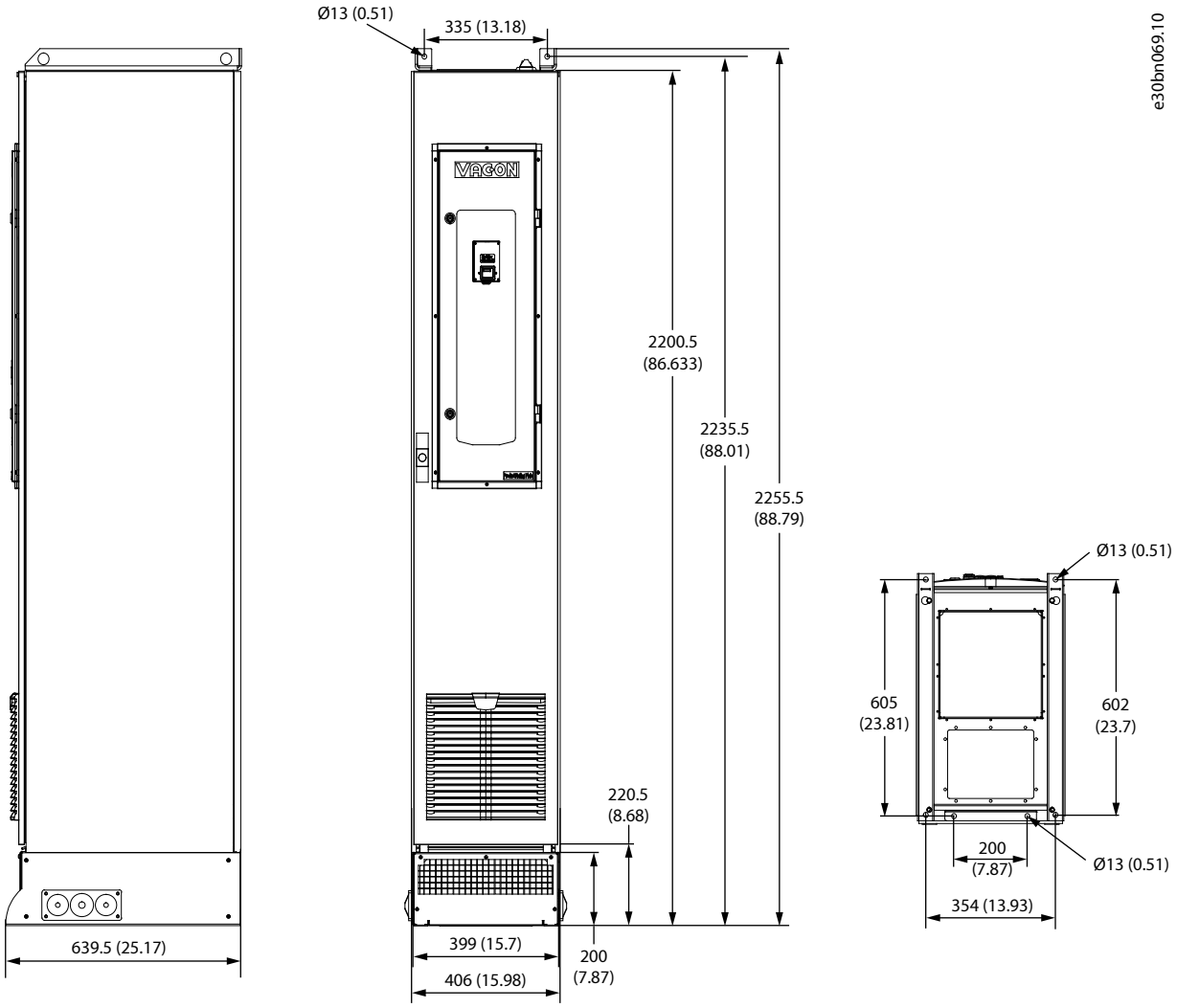

Figure 90: Dimensions of MR8 Cabinet, NAM

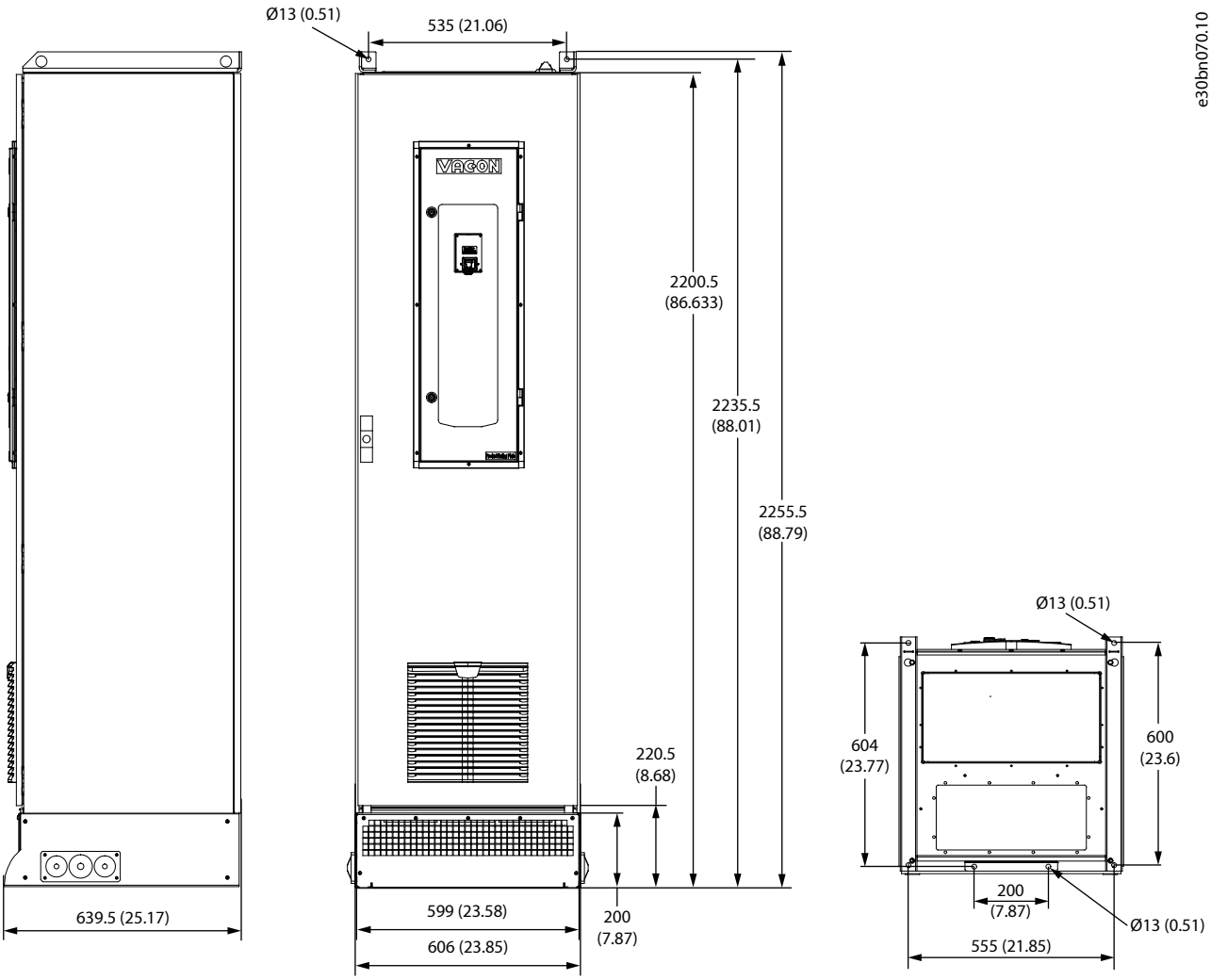

Figure 91: Dimensions of MR9 and MR10 Cabinets, NAM

Danfoss Drives Oy © 2026.11

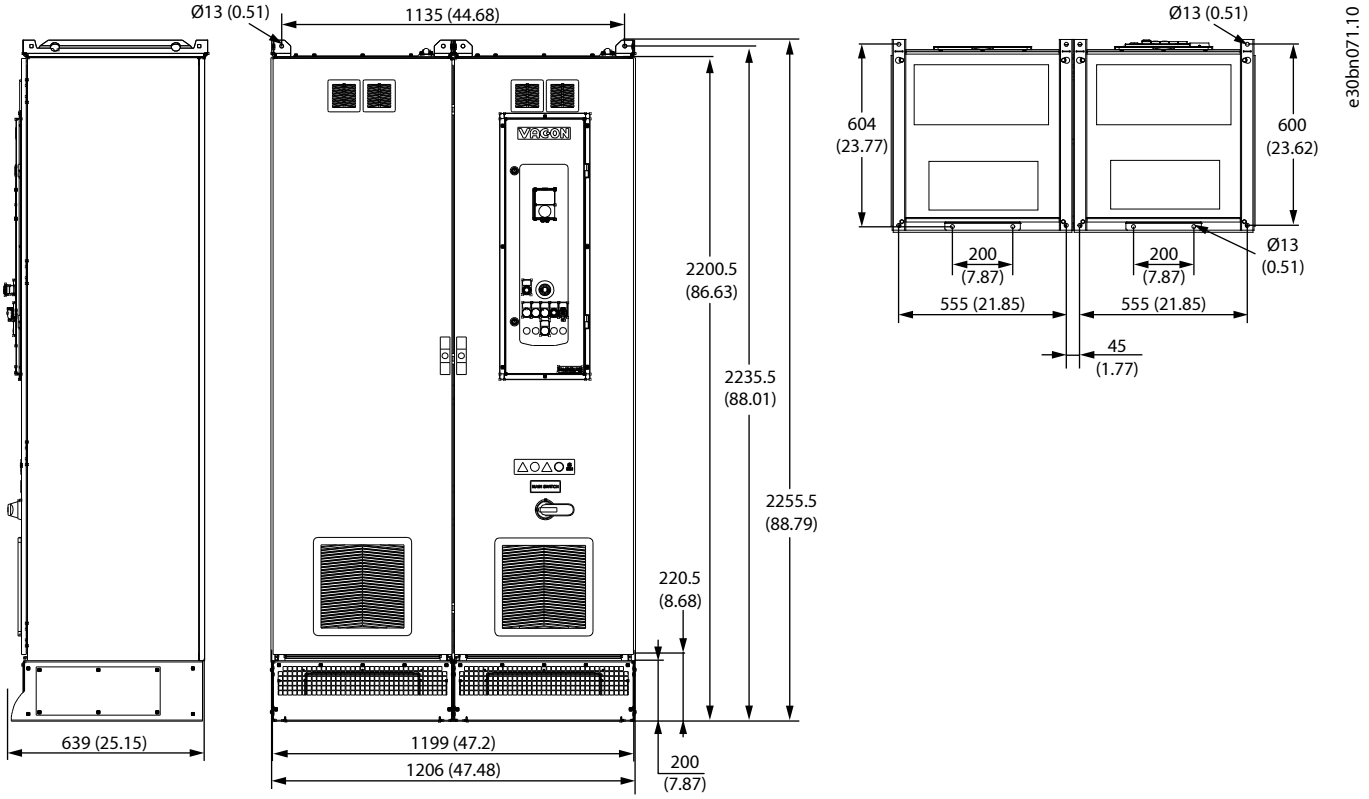

Figure 92: Dimensions of MR11 Cabinet, NAM

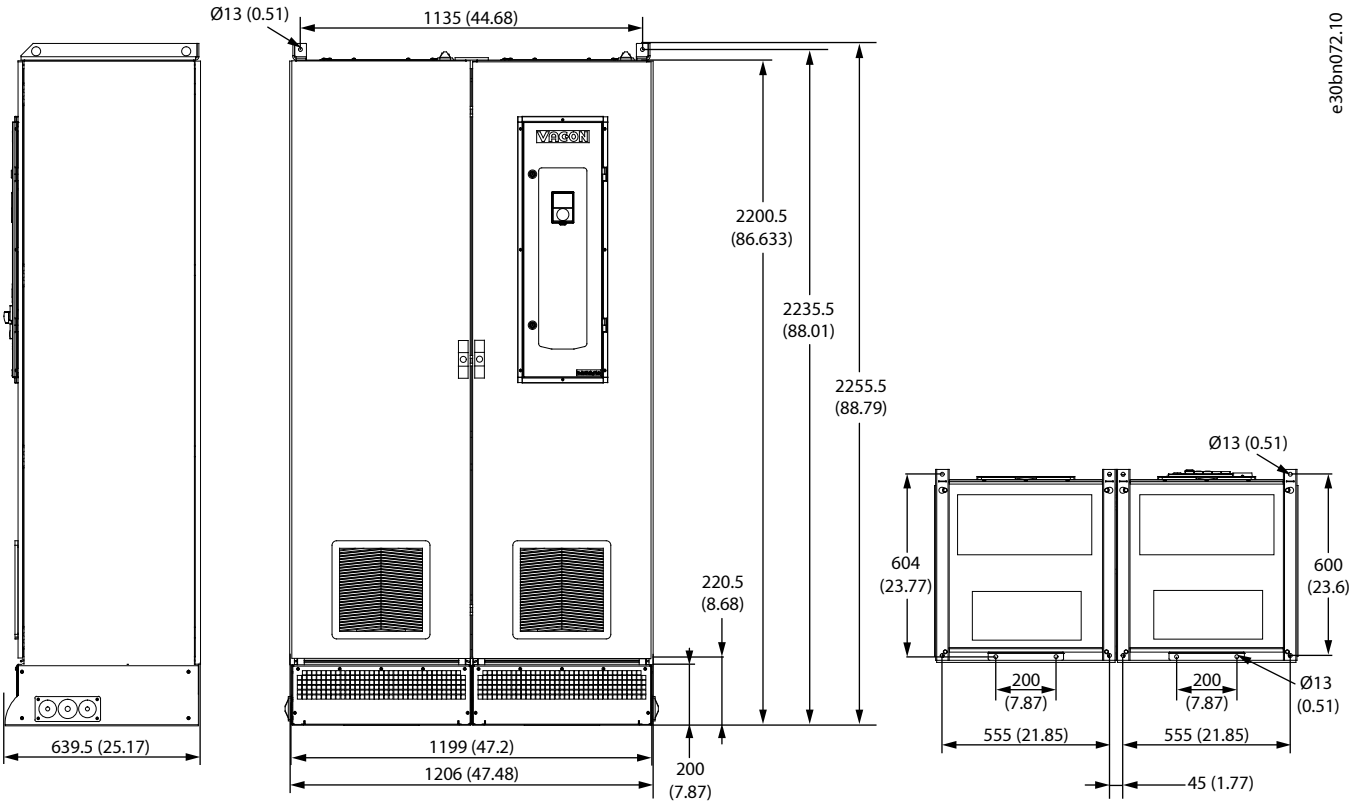

Figure 93: Dimensions of MR12 Cabinet, NAM

10.2.4 Dimensions of the Cabinet with Additional Cabinet Sections, NAM

NAM = The product is qualified to the UL criteria.

The dimension specifications required for cabling are in the order-specific documents.

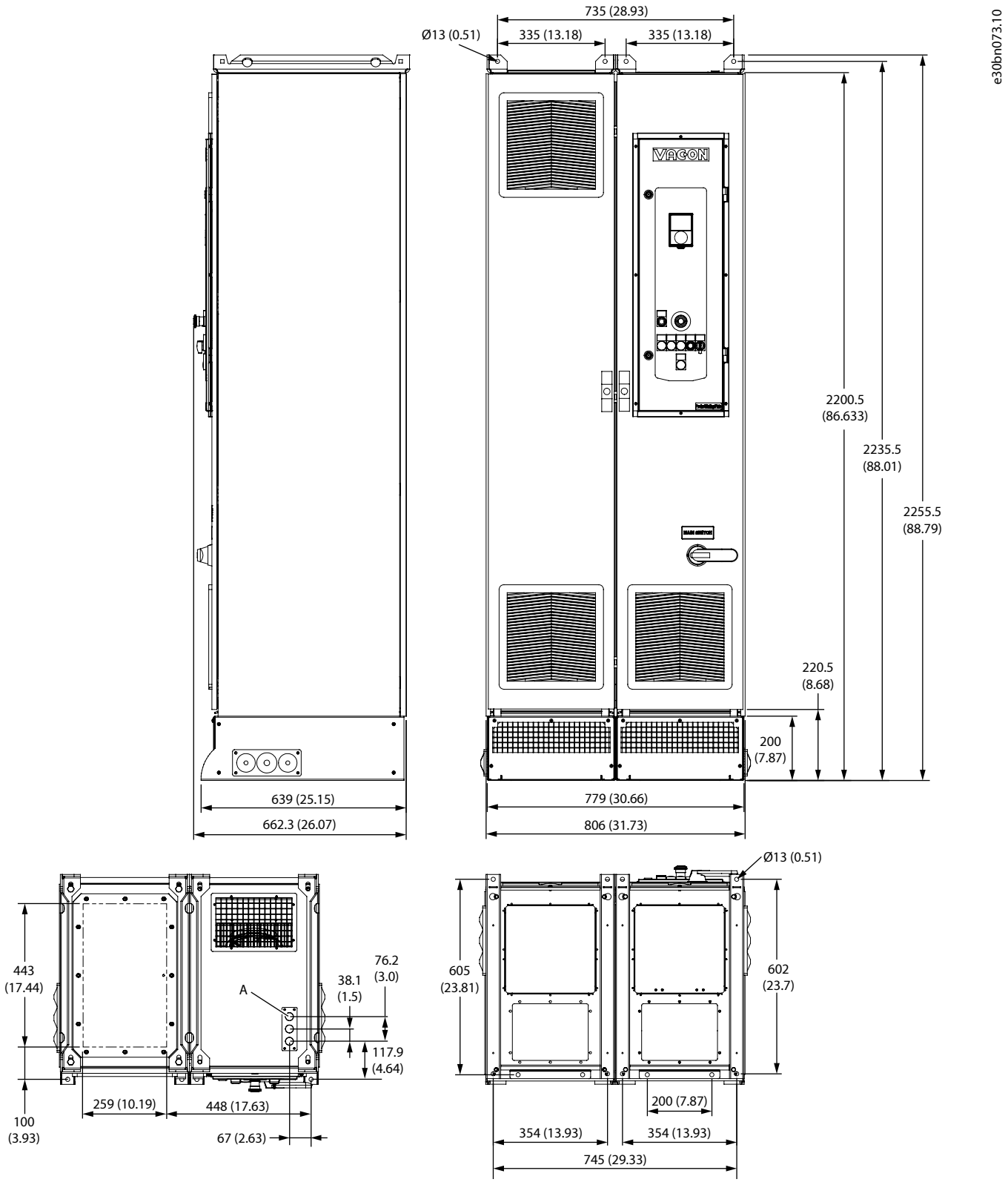

Figure 94: Dimensions of MR8 Cabinet with Optional Cabling from Top, NAM

A	3 x conduit hole Ø22 mm (Ø0.87 in)

Danfoss Drives Oy © 2026.11

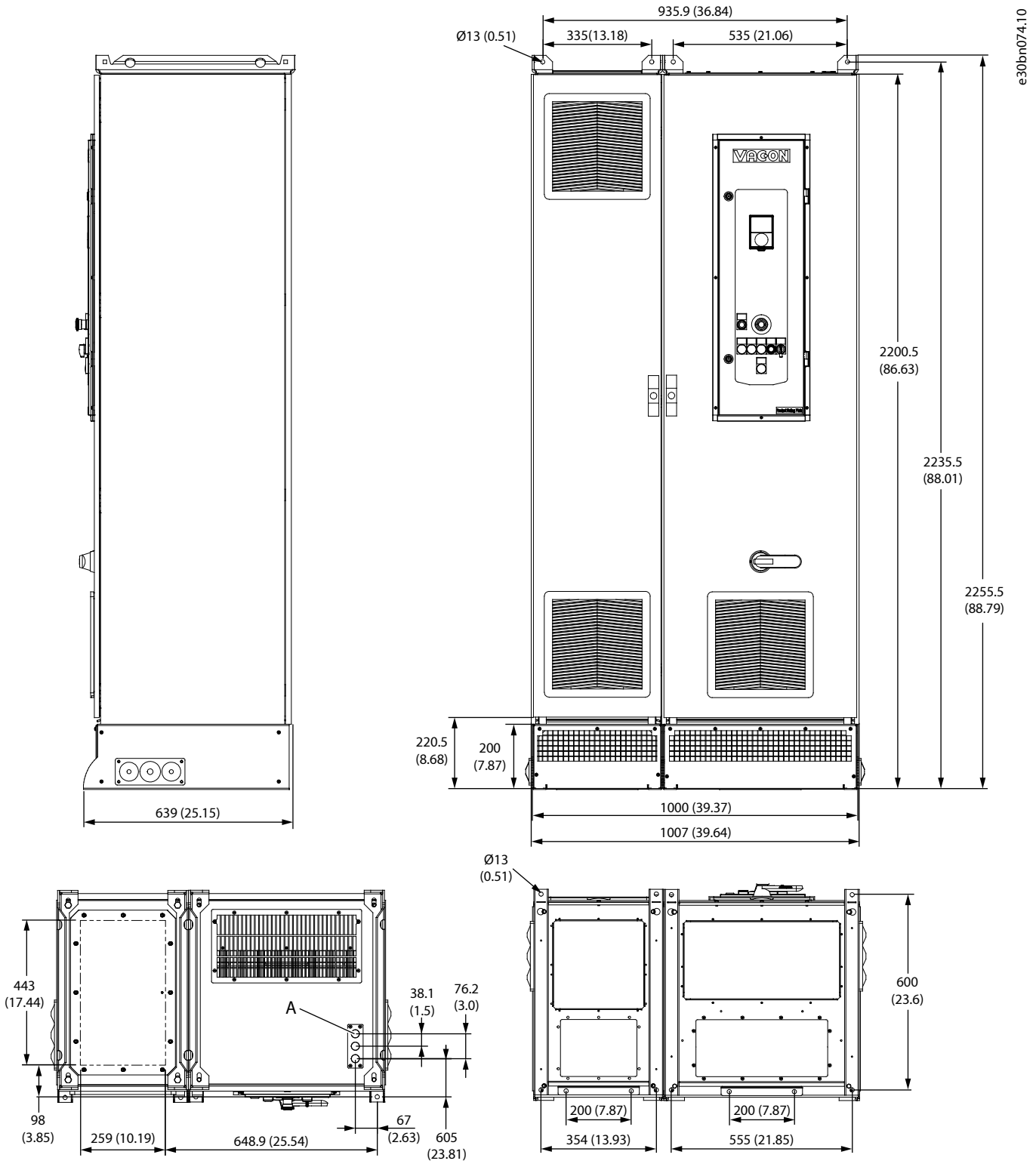

Figure 95: Dimensions of MR9 Cabinet with Optional Cabling from Top, NAM

A	3 x conduit hole Ø22 mm (Ø0.87 in)

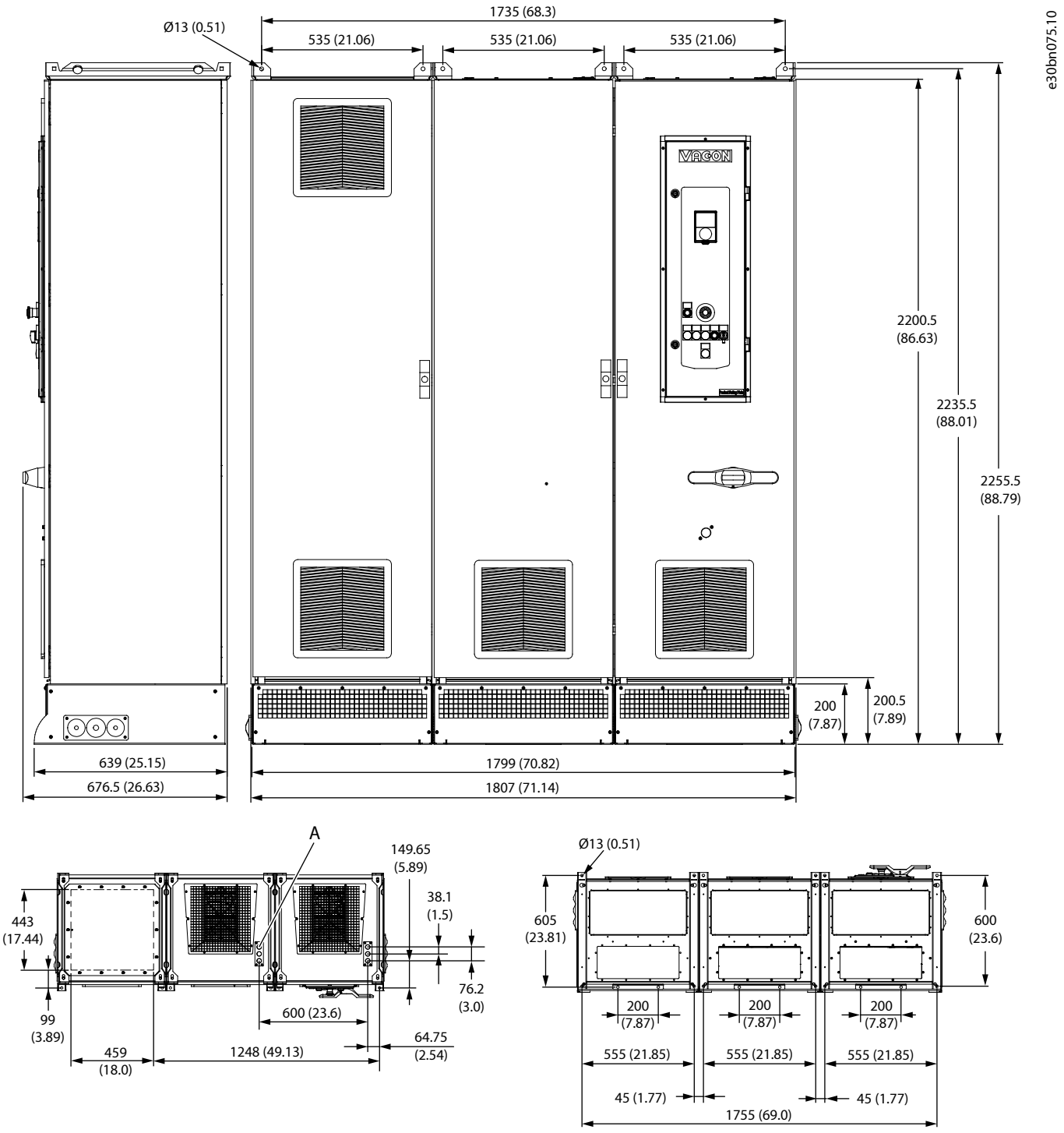

Figure 96: Dimensions of MR12 Cabinet with Optional Cabling from Top and/or Input Contactor, NAM

10.3 Cable and Fuse Sizes

10.3.1 List of Cable and Fuse Size Information

For the cable and fuse size tables for IEC, see:

- 10.3.2 Cable and Fuse Sizes, Mains Voltage 380–500 V, IEC
- 10.3.3 Cable and Fuse Sizes, Mains Voltage 525–690 V, IEC

Danfoss Drives Oy © 2026.11

For the cable and fuse size tables for UL, see:

- 10.3.4 Cable Sizes and Terminal Lugs, Mains Voltage 380–500 V, UL
- 10.3.5 Cable Sizes and Terminal Lugs, Mains Voltage 525–690 V, UL

For the drive fuses for IEC, see:

- 10.3.6 Drive Fuses, Mains Voltage 380–500 V, IEC, Mersen
- 10.3.7 Drive Fuses, Mains Voltage 525–690 V, IEC, Mersen
- 10.3.8 Drive Fuses, Mains Voltage 380–500 V, IEC, Bussmann
- 10.3.9 Drive Fuses, Mains Voltage 525–690 V, IEC, Bussmann

For the drive fuses for UL, see:

- 10.3.10 Drive Fuses, Mains Voltage 380–500 V, UL, Mersen
- 10.3.11 Drive Fuses, Mains Voltage 525–690 V, UL, Mersen

10.3.2 Cable and Fuse Sizes, Mains Voltage 380–500 V, IEC

Table 21: Cable and Fuse Sizes, Mains Voltage 380–500 V, IEC

Enclosure size	Drive type	I_L [A]	Mains fuse (gG/gL) [A]	Mains and motor cable (Cu/Al) [mm^2]	Mains and motor terminals, bolt size	Grounding terminal, bolt size
MR8	0140 5	140	160	(3x70+35) (Cu) (3x95+29) (Al)	M8	M8
	0170 5	170	200	(3x95+50) (Cu) (3x150+41) (Al)	M8	M8
	0202 5	205	250	(3x120+70) (Cu) (3x185+57) (Al)	M8	M8
MR9A	0261 5	261	315	(3x185+70) (Cu) 2x(3x120+41) (Al)	M10	M8
	0310 5	310	355	2x(3x95+50) (Cu) 2x(3x120+41) (Al)	M10	M8
MR9B	0386 5	385	400	(3x120+70) (Cu) 2x(3x185+57) (Al)	M10	M8
MR10	0385 5	385	400	2x(3x120+70) (Cu) 2x(3x185+57) (Al)	M12	M8
	0460 5	460	500	2x(3x150+70) (Cu) 2x(3x240+72) (Al)	M12	M8
	0520 5	520	630	2x(3x185+95) (Cu) 3x(3x150+41) Al	M12	M8
	0590 5	590	630	2x(3x240+120) (Cu) 3x(3x185+57) (Al)	M12	M8
MR11	0651 5	650	2 x 355	4x(3x95+50) (Cu) 4x(3x120+41) (Al)	M10	M8
	0731 5	730	2 x 400	4x(3x95+50) (Cu) 4x(3x150+41) (Al)	M10	M8

Table 21: Cable and Fuse Sizes, Mains Voltage 380–500 V, IEC - (continued)

Enclosure size	Drive type	I_L [A]	Mains fuse (gG/gL) [A]	Mains and motor cable (Cu/Al) [mm^2]	Mains and motor terminals, bolt size	Grounding terminal, bolt size
M12	0650 5	650	2 x 355	4x(3x95+50) (Cu) 4x(3x120+41) (Al)	M12	M8
	0730 5	730	2 x 400	4x(3x95+50) (Cu) 4x(3x150+41) (Al)	M12	M8
	0820 5	820	2 x 500	4x(3x120+70) (Cu) 4x(3x185+57) (Al)	M12	M8
	0920 5	920	2 x 500	4x(3x150+70) (Cu) 4x(3x185+57) (Al)	M12	M8
	1040 5	1040	2 x 630	4x(3x185+95) (Cu) 6x(3x150+41) (Al)	M12	M8
	1180 5	1180	2 x 630	4x(3x250+120) (Cu) 6x(3x185+57) (Al)	M12	M8

10.3.3 Cable and Fuse Sizes, Mains Voltage 525–690 V, IEC

Table 22: Cable and Fuse Sizes, Mains Voltage 525–690 V, IEC

Enclosure size	Drive type	I_L [A]	Mains fuse (gG/gL) [A]	Mains and motor cable (Cu/Al) [mm^2]	Mains and motor terminals, bolt size	Grounding terminal, bolt size
MR8	0080 7	80	100	(3x35+16) (Cu) (3x50+21) (Al)	M8	M8
	0100 7	100	125	(3x50+25) (Cu) (3x70+21) (Al)	M8	M8
	0125 7	125	160	(3x70+35) (Cu) (3x95+29) (Al)	M8	M8
MR9A	0144 7	144	160	(3x70+35) (Cu) 2x(3x95+41) (Al)	M10	M8
	0170 7	170	200	(3x95+50) (Cu) (3x150+41) (Al)	M10	M8
	0208 7	208	250	(3x120+70) (Cu) (3x185+579 (Al)	M10	M8
MR9B	0262 7	261	315	(3x185+95) (Cu) 2x(3x95+29) (Al)	M10	M8
MR10	0261 7	261	315	3x(3x185+95) (Cu) 2x(3x95+29) (Al)	M12	M8
	0325 7	325	355	(3x240+120) (Cu) 2x(3x120+41) (Al)	M12	M8
	0385 7	385	400	2x(3x120+70) (Cu) 2x(3x185+57) Al	M12	M8
	0416 7	416	450	2x(3x120+70) (Cu) 2x(3x185+57) (Al)	M12	M8

Danfoss Drives Oy © 2026.11

Table 22: Cable and Fuse Sizes, Mains Voltage 525–690 V, IEC - (continued)

Enclosure size	Drive type	I_L [A]	Mains fuse (gG/gL) [A]	Mains and motor cable (Cu/Al) [mm^2]	Mains and motor terminals, bolt size	Grounding terminal, bolt size
MR11	0461 7	460	2 x 315	2x(3x15+70) (Cu) 2x(3x240+72) (Al)	M10	M8
	0521 7	520	2 x 315	2x(3x185+95) (Cu) 4x(3x95+29) (Al)	M10	M8
M12	0460 7	460	2 x 315	2x(3x150+70) (Cu) 2x(3x240+72) (Al)	M12	M8
	0520 7	520	2 x 315	2x(3x185+95) (Cu) 4x(3x95+29) (Al)	M12	M8
	0590 7	590	2 x 315	4x(3x70+35) (Cu) 4x(3x95+29) (Al)	M12	M8
	0650 7	650	2 x 355	4x(3x95+50) (Cu) 4x(3x150+41) (Al)	M12	M8
	0750 7	750	2 x 400	4x(3x120+70) (Cu) 4x(3x150+41) (Al)	M12	M8
	0820 7	820	2 x 425	4x(3x120+70) (Cu) 4x(3x185+57) (Al)	M12	M8

10.3.4 Cable Sizes and Terminal Lugs, Mains Voltage 380–500 V, UL

Table 23: Cable Sizes and Terminal Lugs, Mains Voltage 380–500 V, UL

Enclosure size	Drive type	I_L [A]	Mains and motor cable (Cu) [AWG/kcmil]	Mains and motor cable termination (Panduit terminal part number)	Grounding terminal bolt and lug (Panduit terminal part number)
MR8	0140 5	140	(3x2/0+3x10)	LCAX2/0-38-X	P10-56R-L
	0170 5	170	(3x4/0+3x8)	LCAX4/0-38-X	LCAX8-56-L
	0202 5	205	(3x262+3x6)	LCAX250-38-X	LCAX6-56-L
MR9A	0261 5	261	2x(3x2/0+3x10)	LCAX2/0-38-X	P10-56R-L
	0310 5	310	2x(3x4/0+3x8)	LCAX4/0-38-X	LCAX8-56-L
MR9B	0386 5	385	2x(3x262+3x6)	LCAX250-12-X	LCAX6-56-L
MR10	0385 5	385	2x(3x262+3x6)	LCAX250-12-X	LCAX6-56-L
	0460 5	460	2x(3x313+3x6)	LCAX300-12-6	LCAX6-56-L
	0520 5	520	2x(3x373+3x6)	LCAX350-12-6	LCAX6-56-L
	0590 5	590	3x(3x262+3x6)	LCAX250-12-X	LCAX6-56-L
MR11	0651 5	650	4x(3x4/0+3x8)	LCAX4/0-12-X	LCAX8-56-L
	0731 5	730	4x(3x4/0+3x8)	LCAX4/0-12-X	LCAX8-56-L

Table 23: Cable Sizes and Terminal Lugs, Mains Voltage 380–500 V, UL - (continued)

Enclosure size	Drive type	I_L [A]	Mains and motor cable (Cu) [AWG/kcmil]	Mains and motor cable termination (Panduit terminal part number)	Grounding terminal bolt and lug (Panduit terminal part number)
M12	0650 5	650	4x(3x4/0+3x8)	LCAX4/0-12-X	LCAX8-56-L
	0730 5	730	4x(3x4/0+3x8)	LCAX4/0-12-X	LCAX8-56-L
	0820 5	820	4x(3x262+3x6)	LCAX250-12-X	LCAX6-56-L
	0920 5	920	4x(3x313+3x6)	LCAX300-12-6	LCAX6-56-L
	1040 5	1040	4x(3x373+3x6)	LCAX350-12-6	LCAX6-56-L
	1180 5	1180	6x(3x262+3x6)	LCAX250-12-X	LCAX6-56-L

10.3.5 Cable Sizes and Terminal Lugs, Mains Voltage 525–690 V, UL

Table 24: Cable Sizes and Terminal Lugs, Mains Voltage 525–690 V, UL

Enclosure size	Drive type	I_L [A]	Mains and motor cable (Cu) [AWG/kcmil]	Mains and motor cable termination (Panduit terminal part number)	Grounding terminal bolt and lug (Panduit terminal part number)
MR8	0080 7	80	(3x2+3x10)	LCAX2-38-E	P10-56R-L
	0100 7	100	(3x1+3x10)	LCAX1-38-X	P10-56R-L
	0125 7	125	(3x2/0+3x10)	LCAX2/0-38-X	P10-56R-L
MR9A	0144 7	144	(3x4/0+3x8)	LCAX4/0-38-X	LCAX8-56-L
	0170 7	170	(3x4/0+3x8)	LCAX4/0-38-X	LCAX8-56-L
	0208 7	208	2x(3x1+3x10)	LCAX1-38-X	P10-56R-L
MR9B	0262 7	261	2x(3x2/0+3x10)	LCA2/0-12-X	P10-56R-L
MR10	0261 7	261	2x(3x2/0+3x10)	LCA2/0-12-X	P10-56R-L
	0325 7	325	2x(3x4/0+3x8)	LCAX4/0-12-X	LCAX8-56-L
	0385 7	385	2x(3x262+3x6)	LCAX250-12-X	LCAX6-56-L
	0416 7	416	2x(3x262+3x6)	LCAX250-12-X	LCAX6-56-L
MR11	0461 7	460	4x(3x1/0+3x10)	LCAX1/0-12-X	P10-56R-L
	0521 7	520	4x(3x2/0+3x10)	LCAX2/0-12-X	P10-56R-L
M12	0460 7	460	4x(3x1/0+3x10)	LCAX1/0-12-X	P10-56R-L
	0520 7	520	4x(3x2/0+3x10)	LCAX2/0-12-X	P10-56R-L
	0590 7	590	4x(3x4/0+3x8)	LCAX4/0-12-X	LCAX8-56-L
	0650 7	650	4x(3x4/0+3x8)	LCAX4/0-12-X	LCAX8-56-L
	0750 7	750	4x(3x4/0+3x8)	LCAX4/0-12-X	LCAX8-56-L
	0820 7	820	4x(3x262+3x6)	LCAX250-12-X	LCAX6-56-L

Danfoss Drives Oy © 2026.11

10.3.6 Drive Fuses, Mains Voltage 380–500 V, IEC, Mersen

Table 25: Drive Fuses, Mains Voltage 380–500 V, IEC, Mersen

Enclosure size	Drive type	I_L [A]	Catalog number of the fuse	Fuse rating [A]	Number of fuses required	Fuse size	Minimum prospective short-circuit current [A]
M8	0140 5	140	NH1UD69V400PV	400	3	1	2800
	0170 5	170	NH1UD69V400PV	400	3	1	2800
	205 5	205	NH1UD69V400PV	400	3	1	2800
MR9A	0261 5	261	NH2UD69V500PV	500	3	2	3300
	0310 5	310	NH2UD69V700PV	700	3	2	5800
MR9B	0386 5	385	NH2UD69V700PV	700	3	2	5800
MR10	0385 5	385	NH2UD69V700PV	700	3	2	5800
	0460 5	460	NH3UD69V800PV	800	3	3	6000
	0520 5	520	NH3UD69V1000PV	1000	3	3	8500
	0590 5	590	PC73UD90V10CPA	1000	3	3	13000
MR11	0651 5	650	NH2UD69V700PV	700	6	2	5800
	0731 5	730	NH2UD69V700PV	700	6	2	5800
MR12	0650 5	650	NH2UD69V700PV	700	6	2	5800
	0730 5	730	NH2UD69V700PV	700	6	2	5800
	0820 5	820	NH3UD69V800PV	800	6	3	6000
	0920 5	920	NH3UD69V1000PV	1000	6	3	8500
	1040 5	1040	NH3UD69V1000PV	1000	6	3	8500
	1180 5	1180	PC73UD90V10CPA	1000	6	3	13000

10.3.7 Drive Fuses, Mains Voltage 525–690 V, IEC, Mersen

Table 26: Drive Fuses, Mains Voltage 525–690 V, IEC, Mersen

Enclosure size	Drive type	I_L [A]	Catalog number of the fuse	Fuse rating [A]	Number of fuses required	Fuse size	Minimum prospective short-circuit current [A]
M8	0080 7	80	NH1UD69V200PV	200	3	1	1000
	0100 7	100	NH1UD69V200PV	200	3	1	1000
	0125 7	125	NH1UD69V200PV	200	3	1	1000
MR9A	0144 7	144	NH1UD69V400PV	400	3	1	2800
	0170 7	170	NH1UD69V400PV	400	3	1	2800
	0208 7	208	NH1UD69V400PV	400	3	1	2800
MR9B	0262 7	262	NH2UD69V500PV	500	3	2	3400

Table 26: Drive Fuses, Mains Voltage 525–690 V, IEC, Mersen - (continued)

Enclosure size	Drive type	I_L [A]	Catalog number of the fuse	Fuse rating [A]	Number of fuses required	Fuse size	Minimum prospective short-circuit current [A]
MR10	0261 7	261	NH2UD69V500PV	500	3	2	3400
	0325 7	325	NH2UD69V500PV	500	3	2	3400
	0385 7	385	NH2UD69V700PV	700	3	2	5800
	0416 7	416	NH3UD69V800PV	800	3	3	6000
MR11	0461 7	460	NH2UD69V500PV	500	6	2	3400
	0521 7	520	NH2UD69V500PV	500	6	2	3400
MR12	0460 7	460	NH2UD69V500PV	500	6	2	3400
	0520 7	520	NH2UD69V500PV	500	6	2	3400
	0590 7	590	NH2UD69V500PV	500	6	2	3400
	0650 7	650	NH2UD69V700PV	700	6	2	5800
	0750 7	750	NH2UD69V700PV	700	6	2	5800
	0820 7	820	NH3UD69V800PV	800	6	2	6000

10.3.8 Drive Fuses, Mains Voltage 380–500 V, IEC, Bussmann

Table 27: Drive Fuses, Mains Voltage 380–500 V, IEC, Bussmann

Enclosure size	Drive type	I_L [A]	Catalog number of the fuse	Fuse rating [A]	Number of fuses required	Fuse size	Minimum prospective short-circuit current [A]
M8	0140 5	140	170M3819D	400	3	1	2400
	0170 5	170	170M3819D	400	3	1	2400
	205 5	205	170M3819D	400	3	1	2400
MR9A	0261 5	261	170M5812D	630	3	2	4000
	0310 5	310	170M5812D	630	3	2	4000
MR9B	0386 5	385	170M5814D	800	3	2	5700
MR10	0385 5	385	170M5814D	800	3	2	5700
	0460 5	460	170M6814D	1000	3	3	7500
	0520 5	520	170M6892D	1100	3	3	8500
	0590 5	590	170M8554D	1250	3	3	11000
MR11	0651 5	650	170M5814D	800	6	2	5700
	0731 5	730	170M5814D	800	6	2	5700

Danfoss Drives Oy © 2026.11

Table 27: Drive Fuses, Mains Voltage 380–500 V, IEC, Bussmann - (continued)

Enclosure size	Drive type	I_L [A]	Catalog number of the fuse	Fuse rating [A]	Number of fuses required	Fuse size	Minimum prospective short-circuit current [A]
MR12	0650 5	650	170M5814D	800	6	2	5700
	0730 5	730	170M5814D	800	6	2	5700
	0820 5	820	170M6814D	1000	6	3	7500
	0920 5	920	170M6814D	1000	6	3	7500
	1040 5	1040	170M6892D	1100	6	3	8500
	1180 5	1180	170M8554D	1250	6	3	11000

10.3.9 Drive Fuses, Mains Voltage 525–690 V, IEC, Bussmann

Table 28: Drive Fuses, Mains Voltage 525–690 V, IEC, Bussmann

Enclosure size	Drive type	I_L [A]	Catalog number of the fuse	Fuse rating [A]	Number of fuses required	Fuse size	Minimum prospective short-circuit current [A]
M8	0080 7	80	170M3816D	250	3	1	1300
	0100 7	100	170M3816D	250	3	1	1300
	0125 7	125	170M3816D	250	3	1	1300
MR9A	0144 7	144	170M3819D	400	3	1	2400
	0170 7	170	170M3819D	400	3	1	2400
	0208 7	208	170M3819D	400	3	1	2400
MR9B	0262 7	262	170M5812D	630	3	2	4000
MR10	0261 7	261	170M5812D	630	3	2	4000
	0325 7	325	170M5812D	630	3	2	4000
	0385 7	385	170M5814D	800	3	2	5700
	0416 7	416	170M6814D	1000	3	2	5700
MR11	0461 7	460	170M5812D	630	6	2	4000
	0521 7	520	170M5812D	630	6	2	4000
MR12	0460 7	460	170M5812D	630	6	2	4000
	0520 7	520	170M5812D	630	6	2	4000
	0590 7	590	170M5812D	630	6	2	4000
	0650 7	650	170M5814D	800	6	2	5700
	0750 7	750	170M5814D	800	6	2	5700
	0820 7	820	170M6814D	1000	6	2	7500

10.3.10 Drive Fuses, Mains Voltage 380–500 V, UL, Mersen

Table 29: Drive Fuses, Mains Voltage 380–500 V, UL, Mersen

Enclosure size	Drive type	I_L [A]	Catalog number of the fuse	Fuse rating [A]	Number of fuses required	Fuse size	Minimum prospective short-circuit current [A]
M8	0140 5	140	PC30UD69V350TF	350	3	PSC30	2500
	0170 5	170	PC30UD69V350TF	350	3	PSC30	2500
	205 5	205	PC30UD69V350TF	350	3	PSC30	2500
MR9A	0261 5	261	PC30UD69V550TF	550	3	PSC30	4600
	0310 5	310	PC30UD69V550TF	550	3	PSC30	4600
MR9B	0386 5	385	PC30UD69V550TF	550	3	PSC30	4600
MR10	0385 5	385	PC32UD69V800TF	800	3	PSC32	6800
	0460 5	460	PC32UD69V800TF	800	3	PSC32	6800
	0520 5	520	PC32UD69V1000TF	1000	3	PSC32	9400
	0590 5	590	PC32UD69V1000TF	1000	3	PSC32	9400
MR11	0651 5	650	PC30UD69V550TF	550	6	PSC30	4700
	0731 5	730	PC30UD69V550TF	550	6	PSC30	4700
MR12	0650 5	650	PC32UD69V630TF	630	6	PSC32	4700
	0730 5	730	PC32UD69V630TF	630	6	PSC32	4700
	0820 5	820	PC32UD69V800TF	800	6	PSC32	6800
	0920 5	920	PC32UD69V800TF	800	6	PSC32	6800
	1040 5	1040	PC32UD69V1000TF	1000	6	PSC32	9400
	1180 5	1180	PC32UD69V1000TF	1000	6	PSC32	9400

10.3.11 Drive Fuses, Mains Voltage 525–690 V, UL, Mersen

Table 30: Drive Fuses, Mains Voltage 525–690 V, UL, Mersen

Enclosure size	Drive type	I_L [A]	Catalog number of the fuse	Fuse rating [A]	Number of fuses required	Fuse size	Minimum prospective short-circuit current [A]
M8	0080 7	80	PC30UD69V200TF	200	3	PSC30	1100
	0100 7	100	PC30UD69V200TF	200	3	PSC30	1100
	0125 7	125	PC30UD69V200TF	200	3	PSC30	1100
MR9A	0144 7	144	PC30UD69V350TF	350	3	PSC30	2500
	0170 7	170	PC30UD69V350TF	350	3	PSC30	2500
	0208 7	208	PC30UD69V350TF	350	3	PSC30	2500
MR9B	0262 7	262	PC30UD69V400TF	400	3	PSC30	3100

Danfoss Drives Oy © 2026.11

Table 30: Drive Fuses, Mains Voltage 525–690 V, UL, Mersen - (continued)

Enclosure size	Drive type	I_L [A]	Catalog number of the fuse	Fuse rating [A]	Number of fuses required	Fuse size	Minimum prospective short-circuit current [A]
MR10	0261 7	261	PC30UD69V500TF	500	3	PSC32	3300
	0325 7	325	PC30UD69V500TF	500	3	PSC32	3300
	0385 7	385	PC32UD69V630TF	630	3	PSC32	4700
	0416 7	416	PC32UD69V800TF	800	3	PSC32	6800
MR11	0461 7	460	PC30UD69V400TF	400	6	PSC30	3100
	0521 7	520	PC30UD69V400TF	400	6	PSC30	3100
MR12	0460 7	460	PC30UD69V500TF	500	6	PSC32	3300
	0520 7	520	PC30UD69V500TF	500	6	PSC32	3300
	0590 7	590	PC30UD69V500TF	500	6	PSC32	3300
	0650 7	650	PC32UD69V630TF	630	6	PSC32	4700
	0750 7	750	PC32UD69V630TF	630	6	PSC32	4700
	0820 7	820	PC32UD69V800TF	800	6	PSC32	6800

10.4 Tightening Torques of Terminals

Table 31: Tightening Torques of Terminals, MR8–MR12

Enclosure size	Drive type	Mains and motor terminals		Grounding terminals	
		[Nm]	[In-lb]	[Nm]	[In-lb]
MR8	0140 5–0205 5 0080 7–0125 7	30–44 (1)	266–389 (1)	20	177
MR9	0261 5–0386 5 0144 7–0262 7	30–44 (1)	266–389 (1)	20	177
MR10	0385 5–0590 5 0261 7–0416 7	55–70	490–620	20	177
MR11	0651 5–0731 5 0461 7–0521 7	40–44 (1)	266–389 (1)	20	177
MR12	0650 5–1180 5 0460 7–0820 7	55–70	490–620	20	177

1) Counter torque is required for mains terminals.

10.5 Power Ratings

10.5.1 List of Power Rating Information

This topic lists the links to find the power rating tables for VACON® 100 Enclosed Drives.

VACON® 100 INDUSTRIAL:

- 10.5.2 Power Ratings of VACON® 100 INDUSTRIAL, Mains Voltage 380–500 V
- 10.5.3 Power Ratings of VACON® 100 INDUSTRIAL, Mains Voltage 525–690 V

VACON® 100 FLOW:

- 10.5.4 Power Ratings of VACON® 100 FLOW, Mains Voltage 380–500 V
- 10.5.5 Power Ratings of VACON® 100 FLOW, Mains Voltage 525–690 V

10.5.2 Power Ratings of VACON® 100 INDUSTRIAL, Mains Voltage 380–500 V

Table 32: Power Ratings of VACON® 100 INDUSTRIAL, 380–500 V, 50–60 Hz, 3~

Enclosure size	Drive type	Loadability							Motor shaft power			
		Low			High			Maximum current I_s, 2s	400 V mains		480 V mains	
		Continuous current I_{Lout} [A]	Input current I_{Lin}[A]	10% overload current [A]	Continuous current I_{Hout} [A]	Input current I_{Hin}[A]	50% overload current [A]		10% overload 40 °C (104 °F) [kW]	50% overload 40 °C (104 °F) [kW]	10% overload 40 °C (104 °F) [hp]	50% overload 40 °C (104 °F) [hp]
MR8	0140	140	139.4	154	105	109	157.5	210	75	55	100	75
	0170	170	166.5	187	140	139.4	210	280	90	75	125	100
	0205	205	199.6	225.5	170	166.5	255	340	110	90	150	125
MR9A	0261	261	258	287.1	205	204	307.5	410	132	110	200	150
	0310	310	303	341	251	246	376.5	502	160	132	250	200
MR9B	0386	385	385	423.5	310	311	465	620	200	160	300	250
MR10	0385	385	385	423.5	310	311	165	620	200	160	300	250
	0460	460	460	506	385	391	577.5	770	250	200	350	300
	0520	520	520	572	460	459	690	920	250	250	450	350
	0590(1)	590	590	649	520	515	780	1040	315	250	500	450
MR11	0651	650	648	715	590	587	885	1180	355	315	500	500
	0731	730	724	803	650	642	975	1300	400	355	600	500
MR12	0650	650	648	715	590	587	885	1180	355	315	500	500
	0730	730	724	803	650	642	975	1300	400	355	600	500
	0820	820	822	902	730	731	1095	1460	450	400	700	600
	0920	920	916	1012	820	815	1230	1640	500	450	800	700
	1040(1)	1040	1030	1144	920	908	1380	1840	560	500	900	800
	1180(1)	1180	1164	1298	920	908	1380	1840	630	500	1000	800

1) These currents are not available when both back-channel cooling and dU/dt filter (+CHCB and +PODU) are used.

Danfoss Drives Oy © 2026.11

10.5.3 Power Ratings of VACON® 100 INDUSTRIAL, Mains Voltage 525–690 V

Table 33: Power Ratings of VACON® 100 INDUSTRIAL, 525–690 V, 50–60 Hz, 3~

Enclosure size	Drive type	Loadability							Motor shaft power			
		Low			High			Maximum current I_s, 2s	600 V mains		690 V mains	
		Continuous current I_{Lout} [A]	Input current I_{Lin}[A]	10% overload current [A]	Continuous current I_{Hout} [A]	Input current I_{Hin}[A]	50% overload current [A]		10% overload 40 °C (104 °F) [kW]	50% overload 40 °C (104 °F) [kW]	10% overload 40 °C (104 °F) [hp]	50% overload 40 °C (104 °F) [hp]
MR8	0080	80	90	88	62	72	93	124	75	60	75	55
	0100	100	106	110	80	89	120	160	100	75	90	75
	0125	125	127	137.5	100	104	150	200	125	100	110	90
MR9A	0144	144	156	158.4	125	140	187.5	250	150	125	132	110
	0170	170	179	187	144	155	216	288	–	–	160	132
	0208	208	212	228.8	170	177	255	340	200	150	200	160
MR9B	0262	261	272	287.1	208	223	312	416	250	200	250	200
MR10	0261	261	272	287.1	208	223	312	416	250	200	250	200
	0325	325	330	357.5	261	269	391.5	522	300	250	315	250
	0385	385	386	423.5	325	327	487.5	650	400	300	355	315
	416(1)	416	415	457.6	385	382	577.5	770	450	300	400	355
MR11	0461	460	477	506	416	433	624	832	450	400	450	400
	0521	520	535	572	460	472	690	920	500	450	400	450
MR12	0460	460	477	506	416	433	624	832	450	400	450	400
	0520	520	532	572	460	472	690	920	500	450	500	450
	0590	590	597	649	520	527	780	1040	600	500	560	500
	0650	650	653	715	590	591	885	1180	650	600	630	560
	0750(1)	750	747	825	650	646	975	1300	700	650	710	630
	0820(1)	820	813	902	650	739	975	1300	800	650	800	630

1) These currents are not available when both back-channel cooling and dU/dt filter (+CHCB and +PODU) are used.

10.5.4 Power Ratings of VACON® 100 FLOW, Mains Voltage 380–500 V

Table 34: Power Ratings of VACON® 100 FLOW, 380–500 V, 50–60 Hz, 3~

Enclosure size	Drive type	Loadability				Motor shaft power	
		Continuous current I_{Lout} [A]	Input current I_{Lin} [A]	10% overload current [A]	Maximum current I_s, 2s	400 V mains	480 V mains
						10% overload 40 °C (104 °F) [kW]	10% overload 40 °C (104 °F) [hp]
MR8	0140	140	139.4	154	210	75	100
	0170	170	166.5	187	280	90	125
	0205	205	199.6	225.5	340	110	150
MR9A	0261	261	258	287.1	410	132	200
	0310	310	303	341	502	160	250
MR9B	0386	385	386	423.5	620	200	300
MR10	0385	385	385	423.5	620	200	300
	0460	460	460	506	770	250	350
	0520	520	520	572	920	250	450
	0590(1)	590	590	649	1040	315	500
MR11	0651	650	648	715	1180	355	500
	0731	730	724	803	1300	400	600
MR12	0650	650	648	715	1180	355	500
	0730	730	724	803	1300	400	600
	0820	820	822	902	1460	450	700
	0920	920	916	1012	1640	500	800
	1040(1)	1040	1030	1144	1840	560	900
	1180(1)	1180	1164	1298	1840	630	1000

1) These currents are not available when both back-channel cooling and dU/dt filter (+CHCB and +PODU) are used.

10.5.5 Power Ratings of VACON® 100 FLOW, Mains Voltage 525–690 V

Table 35: Power Ratings of VACON® 100 FLOW, 525–690 V, 50–60 Hz, 3~

Enclosure size	Drive type	Loadability				Motor shaft power	
		Continuous current I_{Lout} [A]	Input current I_{Lin} [A]	10% overload current [A]	Maximum current I_s, 2s	600 V mains	690 V mains
						10% overload 40 °C (104 °F) [kW]	10% overload 40 °C (104 °F) [hp]
MR8	0080	80	90	88	124	75	75
	0100	100	106	110	160	100	90
	0125	125	127	137.5	200	125	110
MR9A	0144	144	156	158.4	250	150	132
	0170	170	179	187	288	–	160
	0208	208	212	228.8	340	200	200

Danfoss Drives Oy © 2026.11

Table 35: Power Ratings of VACON® 100 FLOW, 525–690 V, 50–60 Hz, 3~ - (continued)

Enclosure size	Drive type	Loadability				Motor shaft power	
		Continuous current I_{Lout} [A]	Input current I_{Lin} [A]	10% overload current [A]	Maximum current I_s, 2s	600 V mains	690 V mains
						10% overload 40 °C (104 °F) [kW]	10% overload 40 °C (104 °F) [hp]
MR9B	0262	261	272	287.1	416	250	250
MR10	0261	261	272	287.1	416	250	250
	0325	325	330	357.5	522	300	315
	0385	385	386	423.5	650	400	355
	416(1)	416	415	457.6	770	450	400
MR11	0461	460	477	506	832	450	450
	0521	520	535	572	920	500	400
400MR12	0460	460	477	506	832	450	450
	0520	520	532	572	920	500	500
	0590	590	597	649	1040	600	560
	0650	650	653	715	1180	650	630
	0750(1)	750	747	825	1300	700	710
	0820(1)	820	813	902	1300	800	800

1) These currents are not available when both back-channel cooling and dU/dt filter (+CHCB and +PODU) are used.

10.6 Overload Capability

The **low overload** means that if 110% of the continuous current (I_L) is required for 1 minute every 10 minutes, the remaining 9 minutes must be approximately 98% of I_L or less. This is to make sure that the output RMS current is not more than I_L during the duty cycle.

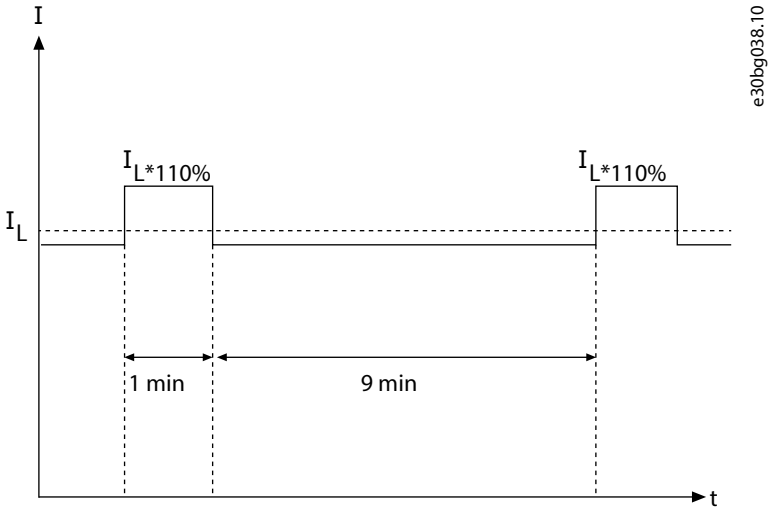

Figure 97: Low Overload

The **high overload** means that if 150% of the continuous current (I_H) is required for 1 minute every 10 minutes, the remaining 9 minutes must be approximately 92% of I_H or less. This is to make sure that the output RMS current is not more than I_H during the duty cycle.

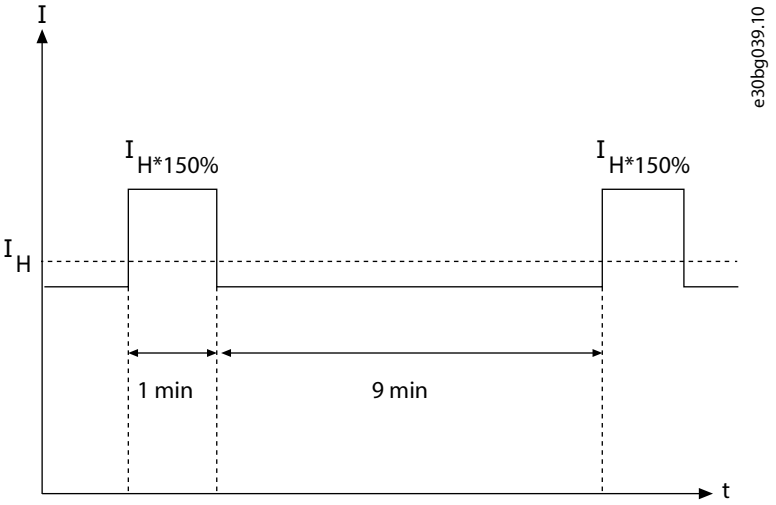

Figure 98: High Overload

For more information, refer to the standard IEC61800-2.

IMPORTANT: High overload is available only for VACON® 100 INDUSTRIAL

10.7 Brake Resistor Ratings

10.7.1 List of Brake Resistor Rating Information

NOTICE

The brake resistor function is available for the VACON® 100 INDUSTRIAL.

For brake resistor rating tables, see:

- 10.7.3 Brake Resistor Cables, Mains Voltage 380–500 V
- 10.7.4 Brake Resistor Cables, Mains Voltage 525–690 V
- 10.7.5 Brake Resistor Types, Mains Voltage 380–500 V
- 10.7.6 Brake Resistor Types, Mains Voltage 525–690 V
- 10.7.7 Brake Resistance and Brake Power, Mains Voltage 380–500 V
- 10.7.8 Brake Resistance and Brake Power, Mains Voltage 525–690 V

10.7.2 Brake Resistance in Light Duty and Heavy Duty

Make sure that the resistance is higher than the set minimum resistance. The power handling capacity must be sufficient for the application.

The light duty cycle is for brake resistor cyclic use (1 LD pulse in a 120 s period). The light duty resistor is rated for a 5 s ramp from full power to 0.

The heavy duty cycle is for brake resistor cyclic use (1 HD pulse in a 120 s period). The heavy duty resistor is rated for a 3 s full power braking with a 7 s ramp to 0.

Danfoss Drives Oy © 2026.11

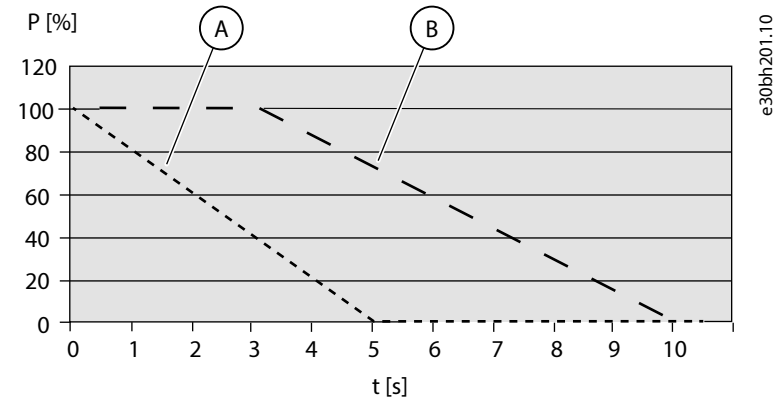

Figure 99: LD and HD Pulses

A	Light duty (LD)	B	Heavy duty (HD)
P	Brake power		

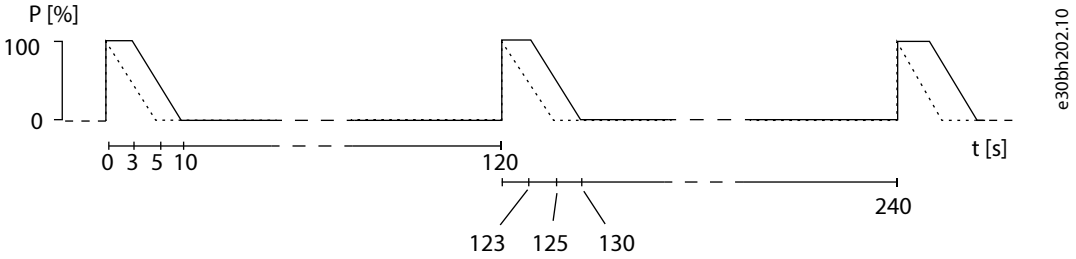

Figure 100: Duty Cycles of the LD and HD Pulses

P	Brake power

10.7.3 Brake Resistor Cables, Mains Voltage 380–500 V

One of the cable conductors remains unconnected. Use the same type of symmetrically shielded cable as for mains and motor cables.

IMPORTANT: The different VACON® 100 applications have different functions. For example, the VACON® 100 FLOW does not have dynamic braking or brake resistor functions.

Table 36: Brake Resistor Cables, Mains Voltage 380–500 V

Enclosure size	Drive type	I_L [A]	Brake resistor cable (Cu) [mm^2]
MR8	0140 5	140	3x70+35
	0170 5	170	3x95+50
	0205 5	205	3x120+70
MR9A	0261 5	261	2x(3x70+35)
	0310 5	310	2x(3x95+35)
MR9B	0386 5	385	2x(3x95+50)
MR10	0385 5	385	2x(3x95+50)
	0460 5	460	
	0520 5	520	2x(3x120+70)
	0590 5	590	

Table 36: Brake Resistor Cables, Mains Voltage 380–500 V - (continued)

Enclosure size	Drive type	I_L [A]	Brake resistor cable (Cu) [mm^2]
MR11	0651 5	650	4x(3x95+50)
	0731 5	730	
MR12	0650 5	650	4x(3x95+50)
	0730 5	730	
	0820 5	820	
	0920 5	920	
	1040 5	1040	4x(3x120+70)
	1180 5	1180	

10.7.4 Brake Resistor Cables, Mains Voltage 525–690 V

One of the cable conductors remains unconnected. Use the same type of symmetrically shielded cable as for mains and motor cables.

IMPORTANT: The different VACON® 100 applications have different functions. For example, the VACON® 100 FLOW does not have dynamic braking or brake resistor functions.

Table 37: Brake Resistor Cables, Mains Voltage 525–690 V

Enclosure size	Drive type	I_L [A]	Brake resistor cable (Cu) [mm^2]
MR8	0080 7	80	3x35+16
	0100 7	100	3x50+25
	0125 7	125	3x70+35
MR9A	0144 7	144	3x70+35
	0170 7	170	3x95+50
	0208 7	208	3x120+70
MR9B	0262 7	261	2x(3x70+35)
MR10	0261 7	261	2x(3x70+35)
	0325 7	325	
	0385 7	385	2x(3x95+50)
	0416 7	416	
MR11	0461 7	460	4x(3x70+35)
	0521 7	520	4x(3x70+35)
MR12	0460 7	460	4x(3x70+35)
	0520 7	520	
	0590 7	590	
	0650 7	650	
	0750 7	750	4x(3x95+50)
	0820 7	820	

Danfoss Drives Oy © 2026.11

10.7.5 Brake Resistor Types, Mains Voltage 380–500 V

Table 38: Recommended Brake Resistor Types and the Calculated Resistance of the Drive, Mains Voltage 380–500 V

Enclosure size	Duty cycle	Type of brake resistor	Resistance [Ω]
MR8	Light duty	BRR 0105 LD 5	6.5
	Heavy duty	BRR 0105 HD 5	6.5
MR9A	Light duty	BRR 0300 LD 5	3.3
	Heavy duty	BRR 0300 HD 5	3.3
MR9B	Light duty	BRR 0520 LD 5	1.4
	Heavy duty	BRR 0520 HD 5	1.4
MR10	Light duty	BRR 0520 LD 5	1.4
	Heavy duty	BRR 0520 HD 5	1.4
MR11	Light duty	BRR 0520 LD 5	2 x 1.4
	Heavy duty	BRR 0520 HD 5	2 x 1.4
MR12	Light duty	BRR 0520 LD 5	2 x 1.4
	Heavy duty	BRR 0520 HD 5	2 x 1.4

The enclosure sizes MR11 and MR12 include 2 power units, each of which has a brake chopper. The brake choppers must have their own brake resistors.

10.7.6 Brake Resistor Types, Mains Voltage 525–690 V

Table 39: Recommended Brake Resistor Types and the Calculated Resistance of the Drive, Mains Voltage 525–690 V

Enclosure size	Drive type	Duty cycle	Types of brake resistor	Resistance [Ω]
MR8	0080	Light duty	BRR 0052 LD 6	18
		Heavy duty	BRR 0052 HD 6	18
	0100–0125	Light duty	BRR 0100 LD 6	9
		Heavy duty	BRR 0100 HD 6	9
MR9A	0144	Light duty	BRR 0100 LD 6	9
		Heavy duty	BRR 0100 HD 6	9
	0170–0208	Light duty	BRR 0208 LD 6	7
		Heavy duty	BRR 0208 HD 6	7
MR9B	0262	Light duty	BRR 0416 LD 6	2.5
		Heavy duty	BRR 0416 HD 6	2.5
MR10	0261–0416	Light duty	BRR 0416 LD 6	2.5
		Heavy duty	BRR 0416 HD 6	2.5
MR11	0460–0520	Light duty	BRR 0416 LD 6	2 x 2.5
		Heavy duty	BRR 0416 HD 6	2 x 2.5
MR12	0460–0820	Light duty	BRR 0416 LD 6	2 x 2.5
		Heavy duty	BRR 0416 HD 6	2 x 2.5

The enclosure sizes MR11 and MR12 include 2 power units, each of which has a brake chopper. The brake choppers must have their own brake resistors.

10.7.7 Brake Resistance and Brake Power, Mains Voltage 380–500 V

Table 40: Minimum Brake Resistance and Brake Power, Mains Voltage 380–500 V

Enclosure size	Minimum brake resistance [Ω]	Brake power @845 V DC [kW](1)
MR8	6.5	109.9
MR9A	3.3	216.4
MR9B	1.4	250
MR10	1.4	400
MR11	2 x 1.4(2)	500
MR12	2 x 1.4(2)	800

1) When using the recommended resistor types.

2) MR11 and MR12 must have 2 brake resistors.

10.7.8 Brake Resistance and Brake Power, Mains Voltage 525–690 V

Table 41: Minimum Brake Resistance and Brake Power, Mains Voltage 525–690 V

Enclosure size	Minimum brake resistance [Ω]	Brake power @1166 V DC [kW](1)
MR8	9	110
MR9A	7	193
MR9B	2.5	250
MR10	2.5	400
MR11	2 x 2.5(2)	500
MR12	2 x 2.5(2)	800

1) When using the recommended resistor types.

2) MR11 and MR12 must have 2 brake resistors.

10.8 Control Connections

Table 42: The Standard I/O Board

Terminal	Signal	Technical information
1	Reference output	+10 V, +3%, maximum current: 10 mA
2	Analog input, voltage or current	Analog input channel 1 0–10 V (Ri = 200 kΩ) 4–20 mA (Ri = 250 Ω) Resolution 0.1%, accuracy ±1% Selection of V/mA with DIP switches (see 7.3.1 Selection of Terminal Functions with DIP Switches)
3	Analog input common (current)	Differential input if not connected to ground Allows ±20 V common-mode voltage to GND

Danfoss Drives Oy © 2026.11

Table 42: The Standard I/O Board - (continued)

Terminal	Signal	Technical information
4	Analog input, voltage or current	Analog input channel 2 0–10 V (Ri = 200 kΩ) 4–20 mA (Ri = 250 Ω) Resolution 0.1%, accuracy ±1% Selection of V/mA with DIP switches (see 7.3.1 Selection of Terminal Functions with DIP Switches)
5	Analog input common (current)	Differential input if not connected to ground Allows ±20 V common-mode voltage to GND
6	24 V auxiliary voltage	+24 V, ±10%, max volt. ripple < 100 mVrms Maximum 250 mA Short-circuit protected
7	I/O ground	Ground for reference and controls (connected internally to frame ground through 1 MΩ)
8	Digital input 1	Positive or negative logic Ri = min. 5 kΩ 0–5 V = 0 15–30 V = 1
9	Digital input 2	
10	Digital input 3	
11	Common A for DIN 1-DIN 6	Digital inputs can be disconnected from ground (see 7.3.2 Isolation of the Digital Inputs from Ground).
12	24 V auxiliary voltage	+24 V, ±10%, max volt. ripple < 100 mVrms Maximum 250 mA Short-circuit protected
13	I/O ground	Ground for reference and controls (connected internally to frame ground through 1 MΩ)
14	Digital input 4	Positive or negative logic Ri = min. 5 kΩ 0–5 V = 0 15–30 V = 1
15	Digital input 5	
16	Digital input 6	
17	Common A for DIN1-DIN6	Digital inputs can be disconnected from ground (see 7.3.2 Isolation of the Digital Inputs from Ground).
18	Analog signal (+output)	Analog output channel 1, selection 0 -20 mA, load <500 Ω 0–10 V 0–20 mA Resolution 0.1%, accuracy ±2% Selection of V/mA with DIP switches (see 7.3.1 Selection of Terminal Functions with DIP Switches) Short-circuit protected
19	Analog output common	
30	24 V auxiliary input voltage	Can be used as an external power backup for the control unit
A	RS-485	Differential receiver/transmitter Set bus termination with DIP switches (see 7.3.1 Selection of Terminal Functions with DIP Switches). Termination resistance = 220 Ω.
B	RS-485	

Table 43: The Standard Relay Board (+SBF3)

Terminal	Signal	Technical information
21 22 23	Relay output 1 [1]	Change-over contact (SPDT) relay. 5.5 mm isolation between channels. Switching capacity: • 24 V DC/8 A • 250 V AC/8 A • 125 V DC/0.4 A Minimum switching load: • 5 V/10 mA
24 25 26	Relay output 2 [1]	Change-over contact (SPDT) relay. 5.5 mm isolation between channels. Switching capacity: • 24 V DC/8 A • 250 V AC/8 A • 125 V DC/0.4 A Minimum switching load: • 5 V/10 mA
32 33	Relay output 3 [1]	Normally-open (NO or SPST) contact relay. 5.5 mm isolation between channels. Switching capacity: • 24 V DC/8 A • 250 V AC/8 A • 125 V DC/0.4 A Minimum switching load: • 5 V/10 mA

1) If 230 V AC is used as control voltage from the output relays, the control circuitry must be powered with a separate isolation transformer to limit the short-circuit current and the overvoltage spikes. This is to avoid welding on the relay contacts. Refer to standard EN 60204-1, section 7.2.9.

Table 44: The Optional Relay Board (+SBF4)

Terminal	Signal	Technical information
21 22 23	Relay output 1 [1]	Change-over contact (SPDT) relay. 5.5 mm isolation between channels. Switching capacity: • 24 V DC/8 A • 250 V AC/8 A • 125 V DC/0.4 A Minimum switching load: • 5 V/10 mA
24 25 26	Relay output 2 [1]	Change-over contact (SPDT) relay. 5.5 mm isolation between channels. Switching capacity: • 24 V DC/8 A • 250 V AC/8 A • 125 V DC/0.4 A Minimum switching load: • 5 V/10 mA

Danfoss Drives Oy © 2026.11

Table 44: The Optional Relay Board (+SBF4) - (continued)

Terminal	Signal	Technical information
28	TI1+	Thermistor input
29	TI1-	Rtrip = 4.7 kΩ (PTC) Measuring voltage 3.5 V

1) If 230 V AC is used as control voltage from the output relays, the control circuitry must be powered with a separate isolation transformer to limit the short-circuit current and the overvoltage spikes. This is to avoid welding on the relay contacts. Refer to standard EN 60204-1, section 7.2.9.

10.9 Technical Data, VACON® 100 INDUSTRIAL

Table 45: Technical Data

Technical item or function		Technical data
Mains connection, Protective Class I	Input voltage U_{in}	380–500 V, 525–690 V, -10%...+10%
	Input frequency	50–60 Hz, -5%...+10%
	Connection to mains	Once per minute or less frequently
	Starting delay	8 s
	Mains	• Mains types: TN, TT, and IT • The maximum short-circuit current I_{cc} must be <65 kA
	Overvoltage category (IEC/EN 60664-1)	Category III
Motor connection	Output voltage	0–U_{in}
	Continuous output current	• I_L: Ambient temperature maximum +40 °C (+104 °F) overload 1.1 x I_L (1 minute/10 minutes) • I_H: Ambient temperature maximum +40 °C (+104 °F) overload 1.5 x I_H (1 minute/10 minutes) • I_H in 690 V drives: Ambient temperature maximum +40 °C (+104 °F) overload 1.5 x I_H (1 minute/10 minutes)
	Output frequency	0–320 Hz (standard)
	Frequency resolution	0.01 Hz

Table 45: Technical Data - (continued)

Technical item or function		Technical data
Control characteristics	Switching frequency (see parameter ***p3.1.2.3***)	MR8–MR12, 380–500 V: • 1.5–6 kHz • Default: MR8: 3 kHz • Default: MR9–MR12: 2 kHz MR8–MR12, 525–690 V: • 1.5–6 kHz • Default: 2 kHz • For a product that is configured for a C4 installation on IT network, the maximum switching frequency is limited to default 2 kHz. Automatic switching frequency derating if an overload occurs.
	Frequency reference: Analog input Panel reference	 Resolution 0.1% (10 bit), accuracy ±1% Resolution: 0.01 Hz
	Field weakening point	8–320 Hz
	Acceleration time	0.1–3000 s
	Deceleration time	0.1–3000 s

Danfoss Drives Oy © 2026.11

Table 45: Technical Data - (continued)

Technical item or function		Technical data
Ambient conditions	Ambient operating temperature	• I_L current: -10 °C (14 °F) (no frost)...+40 °C (104 °F) • I_H current: -10 °C (14 °F) (no frost)...+40 °C (104 °F) • Maximum operating temperature: +50 °C (+122 °F) with derating (1.5%/1 °C) Drives with safety-related options have a maximum ambient temperature of 40 °C (104 °F).
	Storage temperature	-40 °C (-40 °F)...+70 °C (158 °F)
	Relative humidity	0–95% R_H, non-condensing, non-corrosive
	Environmental conditions operation (IEC 60721-3-3)	Climatic conditions: Class 3K22
	Air quality: • chemical vapors • mechanical particles	Tested according to IEC 60068-2-60 Test Ke: Flowing mixed gas corrosion test, Method 1 (H2S [hydrogen sulfide] and SO2 [sulfur dioxide]) Designed according to • IEC 60721-3-3, unit in operation, class 3C3 (IP21/UL Type 1 Models 3C2) • IEC 60721-3-3, unit in operation, class 3S2
	Altitude	100% load capacity (no derating) up to 1000 m (3280 ft) 1% derating for each 100 m (328 ft) above 1000 m (3280 ft) Maximum altitudes: • 380–500 V: 4000 m (13123 ft) (TN and IT systems) • 380–500 V: 2000 m (6562 ft) (corner-grounded network) • 525–690 V: 2000 m (6562 ft) (TN and IT systems, no corner grounding) Voltage for relay outputs: • Up to 3000 m (9842 ft): Allowed up to 240 V • 3000–4000 m (9842–13123 ft): Allowed up to 120 V Corner grounding: • Up to 2000 m (6562 ft) only (requires a change in the EMC level from C3 to C4, see 6.2.2 Installation in a Corner-Grounded Network)
	Pollution degree	IP21: PD2 IP54: PD3
	Vibration: EN61800-5-1 EN60068-2-6	5–150 Hz Displacement amplitude 0.5 mm (peak) at 5–22 Hz Maximum acceleration amplitude 1 G at 22–150 Hz
	Shock: EN60068-2-27	UPS Drop Test (for applicable UPS weights) Storage and shipping: Maximum 15 G, 11 ms (in package)
	Protection rating	IP21: Default IP54: Option
EMC (at default settings)	Immunity	Fulfills EN 61800-3, 1st and 2nd environment
	Emissions	• 380–500 V: EN 61800-3 (2004), category C3, if the drive is correctly installed. • 525–690 V: EN 61800-3 (2004), category C3, if the drive is correctly installed. • All: the drive can be changed to C4 for IT type mains, see 6.5.1 Requirements for Installation in an IT System.

Table 45: Technical Data - (continued)

Technical item or function		Technical data
Noise level	Sound pressure level (minimum–maximum)	The sound pressure depends on the cooling fan speed, which is controlled in accordance with the drive temperature. • MR8: 58–73 dBA • MR9: 54–75 dBA • MR10/MR12: 58–75 dBA
Safety		EN 61800-5-1, CE (see the product label on the drive for more approvals)
Decisive Voltage Class (DVC)	DVC D circuits/terminals	-
	DVC C circuits/terminals	Mains terminals, motor output terminals, DC/brake terminals
	DVC B circuits/terminals	-
	DVC As circuits/terminals	24 V DC output
Protections	Overvoltage trip limit	Mains voltage 500 V: 911 V DC Mains voltage 690 V: 1258 V DC
	Undervoltage trip limit	Depends on mains voltage (0.8775 x mains voltage) • Mains voltage 400 V: Trip limit 351 V DC • Mains voltage 500 V: Trip limit 438 V DC • Mains voltage 525 V: Trip limit 461 V DC • Mains voltage 690 V: Trip limit 606 V DC
	Ground fault protection	Yes
	Mains supervision	Yes
	Motor phase supervision	Yes
	Overcurrent protection	Yes
	Unit overtemperature protection	Yes
	Motor overload protection	Yes. The motor overload protection activates at 110% of the full load current.
	Motor stall protection	Yes
	Motor underload protection	Yes
	Short-circuit protection of +24 V and +10 V reference voltages	Yes

1) For the motor thermal memory and the memory retention function to obey the UL 61800-5-1 requirements, use system software version FW0072V007 or a newer version. If an older system software version is used, install a motor overtemperature protection to obey the UL regulations. For more information about the motor overload protection parameters, see the VACON® 100 INDUSTRIAL Application Guide.

Danfoss Drives Oy © 2026.11

10.10 Technical Data, VACON® 100 FLOW

Table 46: Technical Data

Technical item or function		Technical data
Mains connection, Protective Class I	Input voltage U_{in}	380–500 V, 525–690 V, -10%...+10%
	Input frequency	50–60 Hz, -5%...+10%
	Connection to mains	Once per minute or less frequently
	Starting delay	8 s
	Mains	• Mains types: TN, TT, and IT • The maximum short-circuit current I_{cc} must be <65 kA
	Overvoltage category (IEC/EN 60664-1)	Category III
Motor connection	Output voltage	0–U_{in}
	Continuous output current	I_L: Ambient temperature maximum +40 °C (+104 °F) overload 1.1 x I_L (1 minute/10 minutes)
	Output frequency	0–320 Hz (standard)
	Frequency resolution	0.01 Hz
Control characteristics	Switching frequency (see parameter ***p3.1.2.3***)	MR8–MR12, 380–500 V: • 1.5–6 kHz • Default: MR8: 3 kHz • Default: MR9–MR12: 2 kHz MR8–MR12, 525–690 V: • 1.5–6 kHz • Default: 2 kHz • For a product that is configured for a C4 installation on IT network, the maximum switching frequency is limited to default 2 kHz. Automatic switching frequency derating if an overload occurs.
	Frequency reference: Analog input Panel reference	 Resolution 0.1% (10 bit), accuracy ±1% Resolution: 0.01 Hz
	Field weakening point	8–320 Hz
	Acceleration time	0.1–3000 s
	Deceleration time	0.1–3000 s

Table 46: Technical Data - (continued)

Technical item or function		Technical data
Ambient conditions	Ambient operating temperature	I_L current: -10 °C (14 °F) (no frost)...+40 °C (104 °F) Drives with safety-related options have a maximum ambient temperature of 40 °C (104 °F).
	Storage temperature	-40 °C (-40 °F)...+70 °C (158 °F)
	Relative humidity	0–95% R_H, non-condensing, non-corrosive
	Environmental conditions operation (IEC 60721-3-3)	Climatic conditions: Class 3K22
	Air quality: • chemical vapors • mechanical particles	Tested according to IEC 60068-2-60 Test Ke: Flowing mixed gas corrosion test, Method 1 (H2S [hydrogen sulfide] and SO2 [sulfur dioxide]) Designed according to • IEC 60721-3-3, unit in operation, class 3C3 (IP21/UL Type 1 Models 3C2) • IEC 60721-3-3, unit in operation, class 3S2
	Altitude	100% load capacity (no derating) up to 1000 m (3280 ft) 1% derating for each 100 m (328 ft) above 1000 m (3280 ft) Maximum altitudes: • 380–500 V: 4000 m (13123 ft) (TN and IT systems) • 380–500 V: 2000 m (6562 ft) (corner-grounded network) • 525–690 V: 2000 m (6562 ft) (TN and IT systems, no corner grounding) Voltage for relay outputs: • Up to 3000 m (9842 ft): Allowed up to 240 V • 3000–4000 m (9842–13123 ft): Allowed up to 120 V Corner grounding: • Up to 2000 m (6562 ft) only (requires a change in the EMC level from C3 to C4, see 6.2.2 Installation in a Corner-Grounded Network)
	Pollution degree	IP21: PD2 IP54: PD3
	Vibration: EN61800-5-1 EN60068-2-6	5–150 Hz Displacement amplitude 0.5 mm (peak) at 5–22 Hz Maximum acceleration amplitude 1 G at 22–150 Hz
	Shock: EN60068-2-27	UPS Drop Test (for applicable UPS weights) Storage and shipping: Maximum 15 G, 11 ms (in package)
	Protection rating	IP21: Default IP54: Option
EMC (at default settings)	Immunity	Fulfills EN 61800-3, 1st and 2nd environment
	Emissions	• 380–500 V: EN 61800-3 (2004), category C3, if the drive is correctly installed. • 525–690 V: EN 61800-3 (2004), category C3, if the drive is correctly installed. • All: the drive can be changed to C4 for IT type mains, see 6.5.1 Requirements for Installation in an IT System.

Danfoss Drives Oy © 2026.11

Table 46: Technical Data - (continued)

Technical item or function		Technical data
Noise level	Sound pressure level (minimum–maximum)	The sound pressure depends on the cooling fan speed, which is controlled in accordance with the drive temperature. • MR8: 58–73 dBA • MR9: 54–75 dBA • MR10/MR12: 58–75 dBA
Safety		EN 61800-5-1, CE (see the product label on the drive for more approvals)
Decisive Voltage Class (DVC)	DVC D circuits/terminals	-
	DVC C circuits/terminals	Mains terminals, motor output terminals, DC/brake terminals
	DVC B circuits/terminals	-
	DVC As circuits/terminals	24 V DC output
Protections	Overvoltage trip limit	Mains voltage 500 V: 911 V DC Mains voltage 690 V: 1258 V DC
	Undervoltage trip limit	Depends on mains voltage (0.8775 x mains voltage) • Mains voltage 400 V: Trip limit 351 V DC • Mains voltage 500 V: Trip limit 438 V DC • Mains voltage 525 V: Trip limit 461 V DC • Mains voltage 690 V: Trip limit 606 V DC
	Ground fault protection	Yes
	Mains supervision	Yes
	Motor phase supervision	Yes
	Overcurrent protection	Yes
	Unit overtemperature protection	Yes
	Motor overload protection	Yes. The motor overload protection activates at 110% of the full load current.
	Motor stall protection	Yes
	Motor underload protection	Yes
	Short-circuit protection of +24 V and +10 V reference voltages	Yes

1) For the motor thermal memory and the memory retention function to obey the UL 61800-5-1 requirements, use system software version FW0159V003 or a newer version. If an older system software version is used, install a motor overtemperature protection to obey the UL regulations. For more information about the motor overload protection parameters, see the VACON® 100 FLOW Application Guide.

Danfoss Drives Oy © 2026.11

Danfoss Drives Oy
Runsorintie 7
FIN-65380 Vaasa
drives.danfoss.com

Any information, including, but not limited to information on selection of product, its application or use, product design, weight, dimensions, capacity or any other technical data in product manuals, catalog descriptions, advertisements, etc. and whether made available in writing, orally, electronically, online or via download, shall be considered informative, and is only binding if and to the extent, explicit reference is made in a quotation or order confirmation. Danfoss cannot accept any responsibility for possible errors in catalogs, brochures, videos and other material. Danfoss reserves the right to alter its products without notice. This also applies to products ordered but not delivered provided that such alterations can be made without changes to form, fit or function of the product. All trademarks in this material are property of Danfoss A/S or Danfoss group companies. Danfoss and the Danfoss logo are trademarks of Danfoss A/S. All rights reserved.

AN361179394701en-010801
Danfoss Drives Oy © 2026.11

DPD01666F