Operating Guide

iC7 Series Functional Safety

Air-cooled and Liquid-cooled System Modules

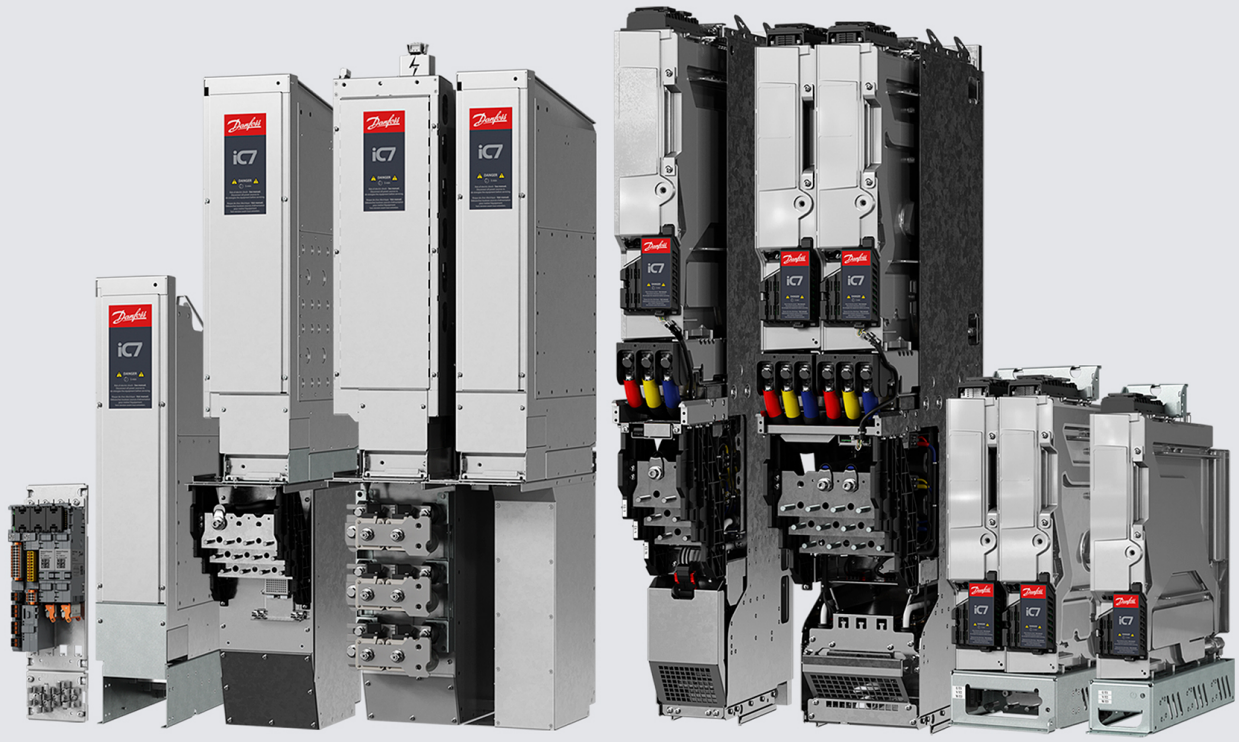

Explore our solutions
drives.danfoss.com

Contents

1 Introduction

1.1 Purpose of this Operating Guide 7
1.2 Additional Resources 7
1.3 Abbreviations 7
1.4 Trademarks 8
1.5 Version History 8

2 Safety

2.1 Safety Symbols 10
2.2 Qualified Personnel for Working with Functional Safety 10
2.3 General Safety Considerations 11

3 iC7 Functional Safety

3.1 Functional Safety Options 12
3.2 Functional Safety System Description 12
3.3 System Modules with Different Safety Functions 13
3.3.1 Overview 13
3.3.2 Safe Torque Off (STO) 13
3.3.3 STO Activation 14
3.3.4 Configuring Restart and Acknowledgment Behavior 14
3.3.5 Safety Input Properties 15
3.3.6 STO Feedback 16

4 Parameters for Safety Functions

4.1 Overview 19
4.2 General Functional Safety Parameters 19
4.3 Failure Configuration 20
4.4 Safe Fieldbus 20
4.5 Pairing Control Units and Power Units 20
4.6 Safe Torque Off (STO) 21
4.7 Safe Stop 1 Time-controlled (SS1-t) 22
4.8 Saving to Device 23
4.9 Validating and Generating a Commissioning Report 23

5 Safe Fieldbus

5.1 PROFIsafe 25
5.2 PROFIsafe System 25
5.3 PROFIsafe Frame 25
5.4 Parameterization for PROFIsafe 26
5.5 PROFIsafe Watchdog Time 27
5.6 PROFIsafe Safety Function Response Time (SFRT) 28
5.7 PROFIdrive on PROFIsafe 29
5.8 PROFIsafe Control Word 29
5.9 PROFIsafe Status Word 30
5.10 PROFIenergy Support 30

6 Installation

6.1 Installation for System Modules with +BEF2 31

7 Configuration Tools

7.1 Overview 35
7.2 System Configuration Security 35
7.3 Preparing for a PC Connection 35
7.4 MyDrive Insight 36
7.4.1 Installing MyDrive® Insight 36
7.4.2 Backing up and Restoring Parameters 36
7.4.3 Performing a Factory Reset 36
7.4.4 Updating Software 36

8 Commissioning

8.1 Commissioning Safety 38
8.2 Commissioning Test 38
8.3 Commissioning Checklist 39
8.4 Commissioning Test for Safety Function STO 39
8.5 Commissioning Test for Safety Function Safe Stop 1 Time-controlled (SS1-t) 40
8.6 Validating and Generating a Commissioning Report 40

9 Operation and Maintenance

9.1 Overview of Functional Tests 42

Danfoss Drives Oy © 2026.11

9.2 Diagnostics 42
9.3 Installation and Maintenance in High Altitudes 43
9.4 Drive and Component Replacement 43

10 Troubleshooting

10.1 Status LEDs 44
10.2 Instances of the STO Function and STO Feedback Output 44
10.3 Safety Function Fault Recovery 45
10.4 Event List 45

11 Specifications

11.1 Functional Safety Standards and Performance 48
11.2 Technical Data 49
11.2.1 Digital Inputs, Outputs, and Auxiliary Voltages 49
11.2.2 PFH and PFD Data for Air-cooled System Modules and Enclosed Drives 50
11.2.3 PFH and PFD Data for Liquid-cooled System Modules 50
11.3 Operating Conditions 51
11.4 Cable Specifications 52

Danfoss Drives Oy © 2026.11

1 Introduction

1.1 Purpose of this Operating Guide

This operating guide provides information on the functional safety features of the iC7 system modules and enclosed drives, and is targeted at users already familiar with the Danfoss iC7 series. It is intended as a supplement to the drive-specific guides.

The guide includes instructions on how to verify that the built-in functional safety features are active, and about configuring the safety features.

1.2 Additional Resources

Additional resources are available to help understand the features, and safely install and operate the iC7 products:

- Safety guides, which provide important safety information related to installing iC7 drives.
- Installation guides, which cover the mechanical and electrical installation of drives, or functional extension options.
- Operating guides, which include instructions for control options and other components for the drive.
- Application guides, which provide instructions on setting up the drive for a specific end use. Application guides for application software packages also provide an overview of the parameters and value ranges for operating the drives, configuration examples with recommended parameter settings, and troubleshooting steps.
- *Facts Worth Knowing about AC Drives*, available for download on www.danfoss.com.
- Other supplemental publications, drawings, and guides are available at www.danfoss.com.

Latest versions of Danfoss product guides are available for download at www.danfoss.com/en/service-and-support/documentation/.

1.3 Abbreviations

Table 1: Abbreviations Related to Functional Safety

Abbreviation	Reference	Description
FIT	–	Failure in time. 1 FIT corresponds to a failure per 1E9 hours of operation.
HFT	EN IEC 61508-4	Hardware fault tolerance: HFT = n means that n+1 faults could cause a loss of the safety function.
PFH	EN IEC 61508-4	Probability of dangerous failures per hour. Consider this value if the safety device is operated in high demand or continuous mode of operation, where the frequency of demands for operation made on a safety-related system is greater than 1 per year.
PFD	EN IEC 61508-4	Average probability of failure on demand, value used for low demand operation.
PL	EN ISO 13849-1	Discrete level used to specify the ability of safety-related parts of control systems to perform a safety function under foreseeable conditions. Levels divided into a to e.
PLr	EN ISO 13849-1	Required performance level (the required performance level for a particular safety function).
SIL	EN IEC 61508-4	Safety Integrity Level
STO	EN IEC 61800-5-2	Safe Torque Off
SS1	EN IEC 61800-5-2	Safe Stop 1

1.4 Trademarks

PROFIBUS® and PROFINET® are registered trademarks of PROFIBUS and PROFINET International (PI).

PROFIdrive® is a registered trademark licensed by PROFIBUS and PROFINET International (PI).

PROFIsafe® is a registered trademark licensed by PROFIBUS and PROFINET International (PI).

1.5 Version History

This guide is regularly reviewed and updated. All suggestions for improvement are welcome.

The original language of this guide is English.

Table 2: Version History

Version	Remarks	Hardware and software versions
AQ477043679710, version 0601	Added a new driver board.	• 136B4311 (Advanced safety unit): Board version 0.4.2 (revision B) or later, firmware version 4.8.0 or later. • 139Z9478 (Safety interface board): Board version 0.03.01 (revision C) or later, firmware version 4.8.0 or later • 139Z9493 (Driver board): revision H or later. • 139Z9617 (Driver board): revision B or later. • 139Z9678 (Driver board): revision B or later. • 70CVB02084 (Driver board): revision F.1 or later. • 139Z9562 (Measurement board): revision E or later. • 70CVB02078 (Measurement board): revision F or later. • 139Z9605 (Driver board): revision 0002 or later. • 139Z9820 (Driver board): revision 0001 or later. • 139Z9823 (Driver board): revision 0001 or later.
AQ477043679710, version 0501	Added a new driver board and a UL safety standard.	• 136B4311 (Advanced safety unit): Board version 0.4.2 (revision B) or later, firmware version 4.8.0 or later. • 139Z9478 (Safety interface board): Board version 0.03.01 (revision C) or later, firmware version 4.8.0 or later • 139Z9493 (Driver board): revision H or later. • 139Z9617 (Driver board): revision B or later. • 139Z9678 (Driver board): revision B or later. • 70CVB02084 (Driver board): revision F.1 or later. • 139Z9562 (Measurement board): revision E or later. • 70CVB02078 (Measurement board): revision F or later. • 139Z9605 (Driver board): revision 0002 or later. • 139Z9820 (Driver board): revision 0001 or later.
AQ477043679710, version 0401	Updated specifications for environmental conditions. Updated EU safety standards.	
AQ477043679710, version 0301	Updates regarding drive replacement and user authentication for modifying functional safety settings in MyDrive® Insight.	

Danfoss Drives Oy © 2026.11

Table 2: Version History - (continued)

Version	Remarks	Hardware and software versions
AQ477043679710, version 0203	Updates regarding functional tests.	• 136B4311 (Advanced safety unit): Board version 0.4.2 (revision B) or later, firmware version 4.8.0 or later. • 139Z9478 (Safety interface board): Board version 0.03.01 (revision C) or later, firmware version 4.8.0 or later • 139Z9493 (Driver board): revision H or later. • 139Z9617 (Driver board): revision B or later. • 70CVB02084 (Driver board): revision F.1 or later. • 139Z9562 (Measurement board): revision E or later. • 70CVB02078 (Measurement board): revision F or later.
AQ477043679710, version 0202	Minor updates regarding Safe Torque Off.	
AQ477043679710, version 0201	Added information about parallel connected power units and PROFIsafe. Minor updates in 3.2 Functional Safety System Description, 3.3.6 STO Feedback, 6.1 Installation for System Modules with +BEF2, 9.1 Overview of Functional Tests, 11.1 Functional Safety Standards and Performance, and 11.2.1 Digital Inputs, Outputs, and Auxiliary Voltages.	
AQ477043679710, version 0102	First release. The information in this version is valid for iC7-Automation air-cooled system modules, iC7-Hybrid liquid-cooled system modules, and iC7-Marine liquid-cooled system modules.	• 136B4311 (Advanced safety unit): Board version 0.4.2 (revision B) or later, firmware version 3.1.0 or later. • 139Z9478 (Safety interface board): Board version 0.03.01 (revision C) or later, firmware version 3.1.0 or later • 139Z9493 (Driver board): revision H or later. • 139Z9617 (Driver board): revision B or later. • 70CVB02084 (Driver board): revision F.1 or later. • 139Z9562 (Measurement board): revision E or later. • 70CVB02078 (Measurement board): revision F or later.

2 Safety

2.1 Safety Symbols

The following symbols are used in Danfoss documentation and products.

⚠ DANGER

Indicates a hazardous situation which, if not avoided, will result in death or serious injury.

⚠ WARNING

Indicates a hazardous situation which, if not avoided, could result in death or serious injury.

⚠ CAUTION

Indicates a hazardous situation which, if not avoided, could result in minor or moderate injury.

NOTICE

Indicates information considered important, but not hazard-related (for example, messages relating to property damage).

	ISO warning symbol for general warnings
	ISO warning symbol for hot surfaces and burn hazard
	ISO warning symbol for high voltage and electric shock
	Symbol for indicating the required discharge time of the capacitors in the product
	ISO action symbol for referring to the instructions

2.2 Qualified Personnel for Working with Functional Safety

Only qualified personnel can install, configure, commission, maintain, and decommission functional safety features and functions. Qualified personnel for working with functional safety features are qualified electrical engineers, or persons who have received training from qualified electrical engineers, and are suitably experienced to operate devices, systems, plants, and machinery in accordance with the general standards and guidelines for safety technology.

Furthermore, they must:

- Be familiar with the basic regulations concerning health and safety/accident prevention.
- Have read and understood the safety guidelines given in this guide.
- Have a good knowledge of the generic and specialist standards applicable to the specific application.

Installers and system integrators of systems incorporating power drive systems (safety-related) are responsible for:

- Hazard and risk analysis of the application.
- The overall safety of the application.

Danfoss Drives Oy © 2026.11

- Identifying safety functions required and allocating SIL or PL to each of the functions, other subsystems, and the validity of signals and commands from them.
- Designing appropriate safety-related control systems, such as hardware, software, and parameterization.

2.3 General Safety Considerations

When installing or operating the drive, pay attention to the safety information given in the instructions. For more information about safety guidelines for installation, see the product-specific safety guide that is included in the drive shipment. For more information about safety guidelines for operating the drive, see the product-specific guides.

⚠ WARNING



RISK OF ELECTRIC SHOCK

The STO safety function does not provide electrical safety. The STO function itself is not sufficient to implement the Emergency-Off function as defined by IEC 60204-1:2018. Using the STO function to implement Emergency-Off may lead to death or personal injury.

- Emergency-Off requires measures of electrical isolation, for example, by switching off mains via an extra contactor.

NOTICE

COMMISSIONING TEST

After installing the safety functions, perform a commissioning test.

A successful commissioning test is required after the initial installation, and after each change to the installation or application involving functional safety.

If the commissioning test fails, safe operation cannot be guaranteed.

3 iC7 Functional Safety

3.1 Functional Safety Options

Functional safety option +BEF2 includes Safe Torque Off (STO) and Safe Stop 1 time-controlled (SS1-t) safety functions. Drives with +BEF2 also include an advanced safety unit, which enables configuring functional safety parameters using MyDrive® Insight.

3.2 Functional Safety System Description

An additional advanced safety unit is used to implement safety functions in accordance with the standard EN IEC 61800-5-2 in iC7 system modules with +BEF2.

The advanced safety unit handles the safe I/O and the monitoring of active safety functions. The advanced safety unit does not handle the controls of the drive. The drive can be controlled, for example, with the drive application, or the external process control system.

The advanced safety unit can be controlled with the digital I/Os and over safe fieldbus, where applicable.

Figure 1 and Figure 2 describe the system architecture of drives with the functional safety units. Gray areas in the illustration indicate that the component is related to functional safety. Dotted lines indicate internal black-channel communication and solid lines indicate optical fiber connections.

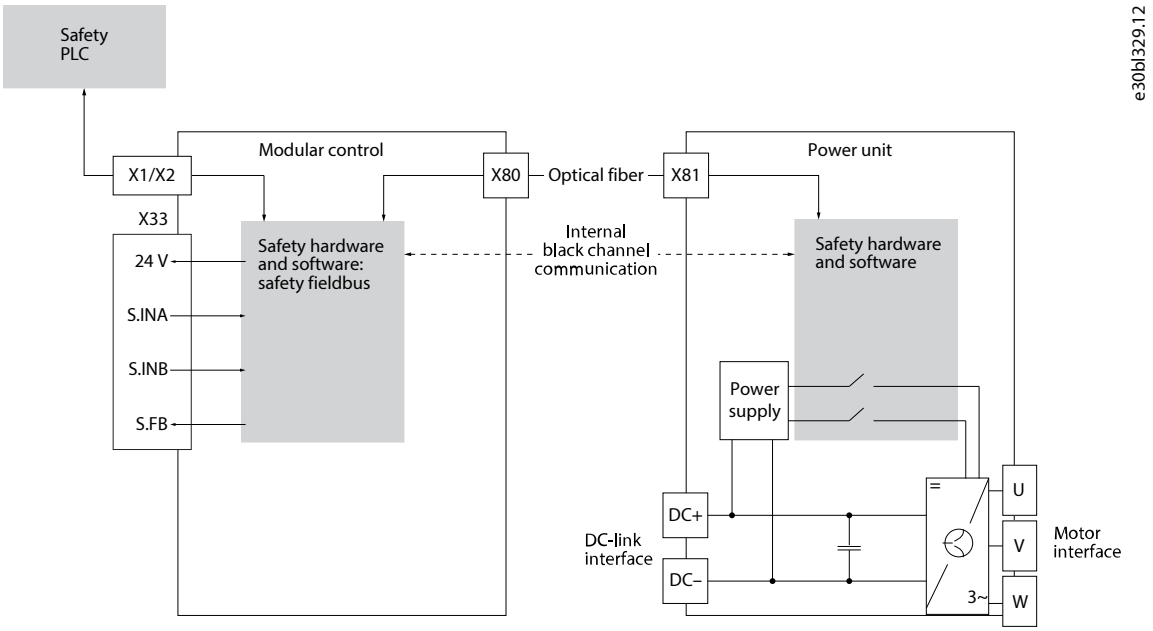

Figure 1: iC7 Functional Safety System Architecture with a Single Power Unit and Safety Fieldbus

Danfoss Drives Oy © 2026.11

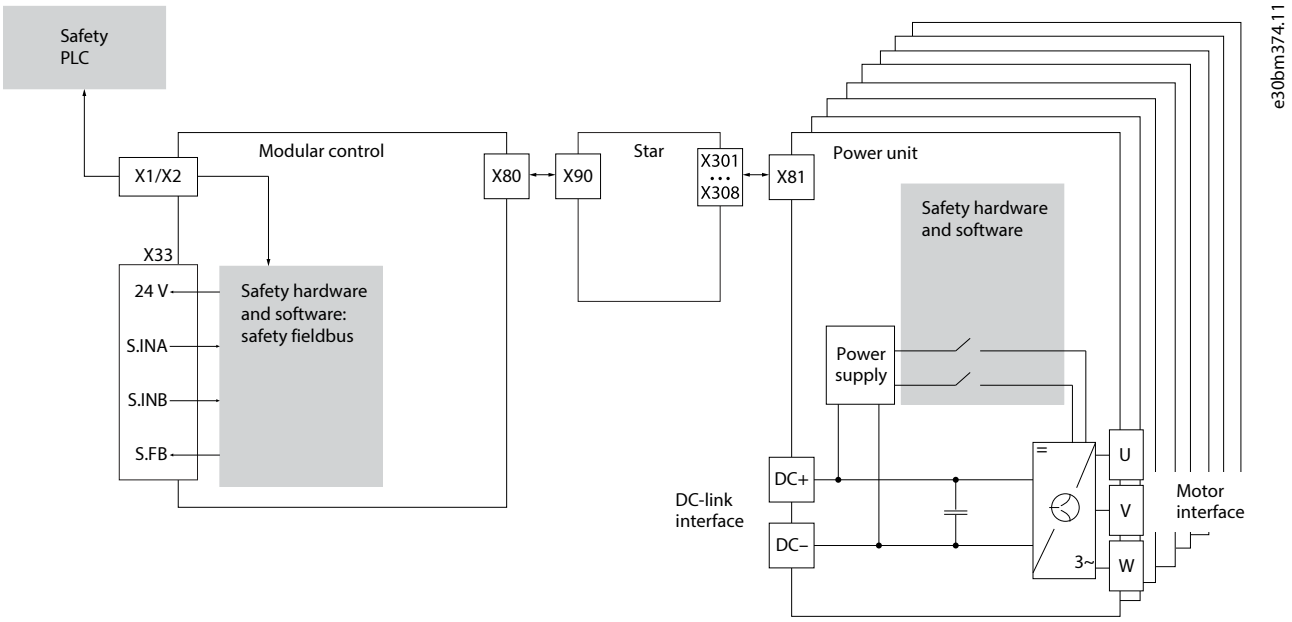

Figure 2: iC7 Functional Safety System Architecture with Parallel Power Units and Safety Fieldbus

3.3 System Modules with Different Safety Functions

3.3.1 Overview

System modules with STO and SS1-t (+BEF2) provide the following safety functions:

- Safe Torque Off (STO).
- Safe Stop 1 time-controlled (SS1-t): the motor decelerates within a specified deceleration time. STO is activated at the end of a deceleration time.

Both safety functions are designed and approved suitable for the requirements of:

- Category 3 in EN ISO 13849-1
- Performance Level "e" in EN ISO 13849-1
- SIL 3 in IEC 61508, EN 61800-5-2, and UL 61800-5-2

The system modules are fitted with a dual-channel, galvanically isolated input, and an STO feedback signal for diagnostic purposes.

A safety function is active if 1 or both of the safety inputs are not connected to a +24 V signal. The drive is not able to go to the RUN state. For more information, see Table 23.

All control inputs and outputs are galvanically isolated from supply voltage (PELV) and other high-voltage terminals, unless otherwise specified.

3.3.2 Safe Torque Off (STO)

NOTICE

- Select and apply the components in the safety control system appropriately to achieve the required level of operational safety. Before integrating and using STO in an installation, carry out a thorough risk analysis on the installation to determine whether the STO functionality and safety levels are appropriate and sufficient.

The Safe Torque Off (STO) function is a component in a safety control system. STO prevents the unit from generating the power required to rotate the motor. If not otherwise stated or configured, STO is defined as a safe state.

The iC7 drives are available with:

- Safe Torque Off (STO), as defined by EN IEC 61800-5-2:2017
- Stop category 0, as defined in EN IEC 60204-1:2018.

The STO function is available for iC7 drives with functional safety plus code +BEF2. Specific hardware revisions are listed in the appendix of the functional safety certificate.

3.3.3 STO Activation

The STO function is activated by 1 of the following reasons:

- An external request.
- A violation of another safety function.
- A fault detected by the internal diagnostics.

The Safe Stop 1 (SS1-t) function activates the STO function when an application-specific time delay has passed (time monitoring).

Use the STO function to stop the drive in a situation where a safety function is required. In normal operating mode when STO is not required, use the standard stop function instead.

3.3.4 Configuring Restart and Acknowledgment Behavior

Safety functions can be set up to require an acknowledgment to safety-related events. These events include the power-up of the device, or the disengagement of a safety function.

The configuration options are:

- ***Direct restart***: Transitioning to the operational state does not require any action.
- ***Nonsafe Acknowledge required***: Acknowledgment through a selected non-safe input is required.
- ***Safe Acknowledge required***: Acknowledgment through a selected safe input or safe fieldbus is required.

IMPORTANT: If the problem persists and the device stays in error mode, contact Danfoss.

NOTICE

The default prevention of unintended restart after STO deactivation does not fulfill a SIL 2 or SIL 3 requirement. This applies when configuring manual restart using the parameter ***7.3.1 Safe Torque Off Response***.

- If an unintended restart is critical to the installation, this has to be controlled by the use of STO, both after STO activation and at normal startup scenarios, for example, after normal power cycle.
- If STO acknowledgment is part of the safety function, the manual startup acknowledgment must be set by a general functional safety parameter. See 4.2 General Functional Safety Parameters for more information on parameter ***Manual startup acknowledge***.

Danfoss Drives Oy © 2026.11

⚠ CAUTION

The default restart behavior is set to manual (parameter ***7.3.1 Safe Torque Off Response*** = ***Fault***).

As the drive always initiates in a safe state, acknowledgment of the release of the STO is required also after the device is powered up.

- This can be prevented by selecting automatic restart, which clears the safe state after the startup is completed (parameter ***7.3.1 Safe Torque Off Response*** = ***Warning***). Before switching to Automatic, ensure that the requirements of EN ISO 12100:2011 paragraph 6.3.3.2.5 are fulfilled. Alternatively, set the manual startup acknowledgment by using a general functional safety parameter. See 4.2 General Functional Safety Parameters for more information.

1. Remove the STO request.

   Dependent on the configuration, this can be done by reapplying 24 V DC supply to the safe inputs or by removing the STO request via the safe fieldbus.

2. Give a reset signal via fieldbus, digital I/O, or the control panel.

   Set the STO function to ***Warning*** by setting the value of parameter ***7.3.1 Safe Torque Off Response*** from the default value ***Fault*** (manual reset) to ***Warning*** (automatic reset). ***Warning*** means that STO is terminated and normal operation is resumed, when the 24 V DC is applied to safe inputs. No reset signal is required.

3.3.5 Safety Input Properties

For flexible adaptation to the safety system, the safe inputs contain the following properties:

- **Galvanic isolation of terminals**: The functional safety I/O terminal blocks on the control board have separate, galvanically isolated inputs to allow, for example, interchanging of the polarities of the safe input terminals as shown in Figure 11 and Figure 13.
- **Test pulse filtering**: Several control modules test their safe outputs using Test Pulse Pattern (on/off tests) to identify faults due to either short- or cross-circuiting. When interconnecting the safe input of the drive with a safe output of the control module, the drive responds to the test signals. A signal change during a test pulse pattern is configured with parameter ***Stable Signal Time*** (range 1–5000 ms). Test pulses of the length configured in parameter ***Stable Signal Time*** are ignored on the safe input lines. It is also possible to filter short pulses, which could lead to safety functions being activated incorrectly.

  See 4.2 General Functional Safety Parameters for more information on parameter ***Stable Signal Time***.

NOTICE

- The stable signal time extends the safety function response time. The safety function is activated after the response time has expired.
- If the signal to the safety input is not stable, the drive responds with a fault.

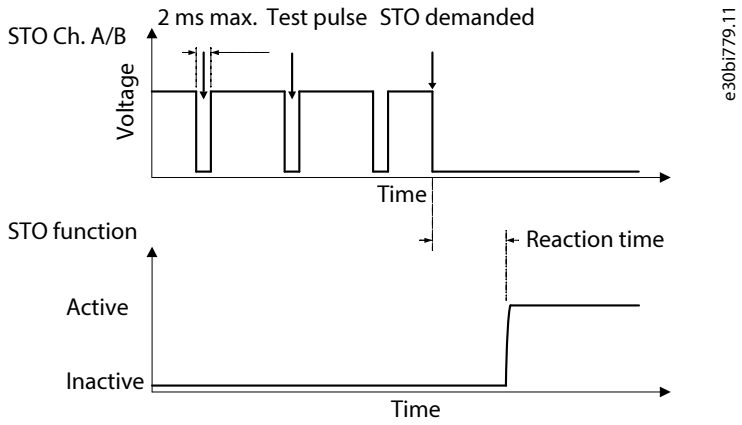

Figure 3: Test Pulse Filtering

- **Asynchronous input tolerance**: The input signals at the safe input terminals are not always synchronous. If the discrepancy between the 2 signals is longer than 500 ms, the drive indicates an I/O failure as described in Table 23. This feature does not delay the activation of the safety function.

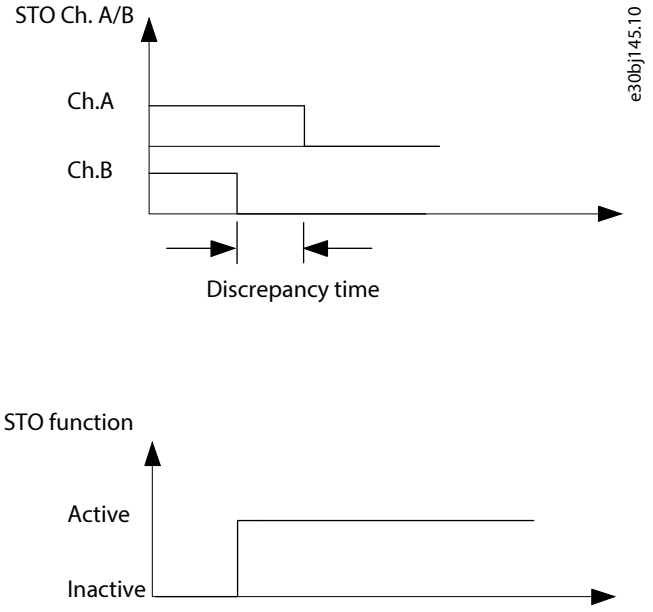

Figure 4: Discrepancy Time

3.3.6 STO Feedback

STO feedback is a single-channel feedback signal which can be used for status information. It can help to achieve better safety capability on system level, for example, in retrofit cases, where diagnostic feedback to the safety system is required.

⚠ CAUTION

The feedback signal is not designed to be a part of the safety function, and it does not have a Safety Integrity Level.

Danfoss Drives Oy © 2026.11

Table 3: Instances of STO Feedback for Systems with Modular Control

State	Feedback state[1]	Additional information
Standard function	De-energized	The motor is running and no safety function is active. STO feedback is de-energized.
STO state is reached	Energized	STO is requested, and a safe state is reached. STO state is reached and connection to all power units is established. STO output is de-energized.
Configuration needed	De-energized	Safe inputs must have a validated configuration to ensure that all power units have reached a safe input state. The connected power units are a part of the configuration, and without a validated configuration, the safe input cannot assume to have a connection to all power units established.
Software update	De-energized	During software update, the state of the safe output is not reliable. STO output is de-energized.
Bootloader and startup	De-energized	The bootloader does not communicate and does not know the state of the STO output on the power units. At startup, the communication is not yet established and the safe input card does not know the state of the safe output on the power units.
Internal failure	De-energized	Indicates a severe issue, for example, in the STO circuitry. It cannot be assumed that the Safety I/O knows that all STO outputs are de-energized.
Internal fatal failure	De-energized	Triggered when a fatal internal issue has occurred, for example, a CPU or RAM fault. The operation cannot be guaranteed, and it cannot be assumed that the safe outputs can be de-energized.

1) ***Energized:*** *STO_FB+ ⇨ STO_FB- circuit closed = current flow = logical "0" with low side driver configuration.* ***De-energized:*** *STO_FB+ ⇨ STO_FB- circuit open = no current flow = logical "1" with low side driver configuration.*

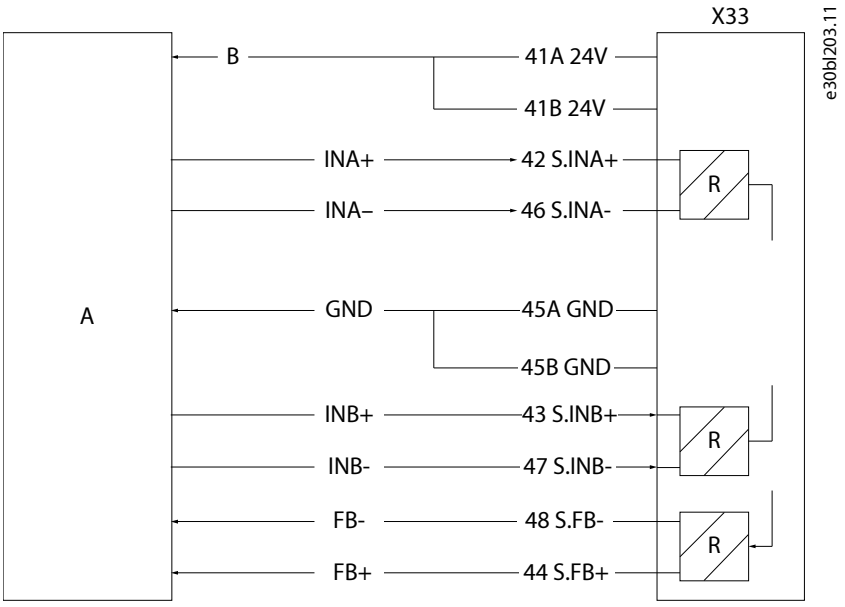

Figure 5: STO Feedback Example with an External Safety Device for System Modules

A	External safety device	B	Supply

It can also be used as a digital output for providing a status signal. In this case, the load could be a digital input of a PLC.

STO and STO feedback are activated when 1 or both safe input channels are de-energized.

In the example in Figure 6, the STO feedback works similarly to a contactor.

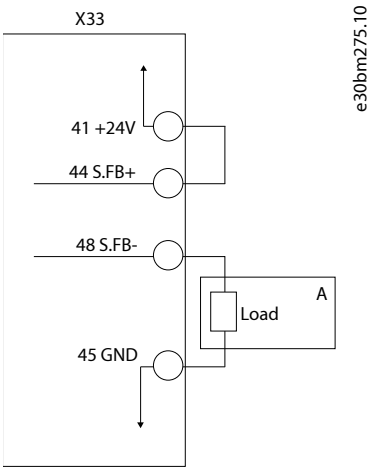

Figure 6: STO Feedback Example, STO Feedback as Contactor

A	External safety device

Danfoss Drives Oy © 2026.11

4 Parameters for Safety Functions

4.1 Overview

Functional safety configuration is done in MyDrive® Insight, in *Setup & Service* > *Functional safety* > *Safety configuration*. Parameter changes require user authentication with appropriate access rights.

Parameters related to application software, for example, automatic/manual restart behavior after STO deactivation, are included in parameter group ***Functional Safety***. Factory default values and other preset values are not valid for safety applications as such, and all parameter values must be checked to ensure that the configuration is suitable for the application. For more information on setting parameters, refer to application software documentation.

IMPORTANT: After initial startup and the modification of the configuration or functional safety parameters, a commissioning test must be performed to verify the functionality of individual safety functions. For more information, see 8.4 Commissioning Test for Safety Function STO and 8.5 Commissioning Test for Safety Function Safe Stop 1 Time-controlled (SS1-t).

The configuration of functional safety features must be done according to the safety system installation and wiring, and consists of the following steps:

1. General parameter configuration
2. Failure configuration
3. System module pairing
4. STO configuration
5. SS1-t configuration
6. Saving to device
7. Verifying parameters
8. Validating the configuration
9. Generating a commissioning report

IMPORTANT: The device does not support Parameterization in Run (PiR) for functional safety-related parameters. To ensure safety, these parameters can only be changed when the drive is stopped. Parameters that are not related to functional safety can be adjusted without stopping the drive.

4.2 General Functional Safety Parameters

Table 4: General Functional Safety Parameters

Parameter name[(1)]	Selections	Default value	Description
Stable Signal Time (A)	1–5000 ms	10	The delay until a signal change to ***Low*** is detected stable. This parameter specifies a delay in addition to the time specified for input signal interpretation in the drive.
Acknowledge Input for I/O Failures (B)	Not selected Safe Input (X33)	Not selected	Specifies the safe digital input, which can be associated to the acknowledgment of the I/O failures.

Table 4: General Functional Safety Parameters - (continued)

Parameter name[1]	Selections	Default value	Description
Triggering Edge for I/O Failure Acknowledge (C)	Rising edge	Rising edge	Specifies the edge for the acknowledgment of the I/O failures.
	Falling edge		
Restart Behavior for Release of I/O Failure (D)	Nonsafe Acknowledge required	Nonsafe Acknowledge required	Specifies the restart behavior for I/O failure.
	Safe Acknowledge required		
Acknowledge Input for Startup (E)	Not selected	Not selected	Specifies the safe digital input, which can be associated to the acknowledgment of the startup.
	Safe Input (X33)		
Triggering Edge for Startup Acknowledge (F)	Rising edge	Rising edge	Specifies the edge for the acknowledgment of the I/O failures.
	Falling edge		
Manual Startup Acknowledge (G)	Direct restart	Direct restart	Specifies the restart behavior for startup acknowledge.
	Nonsafe Acknowledge required		
	Safe Acknowledge required		

1) Parameters are identified with letters in the Safety configuration section in MyDrive® Insight. The letter is given in parentheses after the parameter name for each parameter in this table.

4.3 Failure Configuration

Table 5: Failure Configuration Parameters

Parameter name[1]	Selections	Default value	Description
I/O Fault Mapping (A)	STO	STO	Mapping of fault instance to I/O.
	First instance of SS1		

1) Parameters are identified with letters in the Safety configuration section in MyDrive® Insight. The letter is given in parentheses after the parameter name for each parameter in this table.

4.4 Safe Fieldbus

Table 6: Safe Fieldbus Parameters

Parameter name[1]	Selections	Default value	Description
Safe Fieldbus Address (A)	1–65535	1	The address of the device in the safe fieldbus subsystem.
Safe Fieldbus Configuration (B)	FALSE/TRUE (Checkbox ***Enabled*** not ticked/ticked).	FALSE (Checkbox ***Enabled*** not ticked.)	Specifies if safe fieldbus is enabled.

1) Parameters are identified with letters in the Safety configuration section in MyDrive® Insight. The letter is given in parentheses after the parameter name for each parameter in this table.

4.5 Pairing Control Units and Power Units

Prerequisites:

Control units and power units must be paired to make the system fully functional. Pairing the units establishes safe internal communication between the units. The pairing may need to be done before starting parameterization. By default, the pairing of the units for new drives is done at the factory.

Danfoss Drives Oy © 2026.11

NOTICE

A factory reset also resets the pairing.

- After performing a factory reset, the control units and power units must be paired again to make the system fully functional.

The pairing is done in MyDrive® Insight.

1. In MyDrive® Insight, navigate to *Setup & Service* > *Functional safety* > *Safety configuration* > *System module pairing*.
2. Select *Pair all* to pair a single unit or multiple units.

The pairing view shows the control units and power units connected to a system module.

4.6 Safe Torque Off (STO)

The Safe Torque Off (STO) safety function allows the drive output to be disabled so that the drive cannot generate torque to the motor shaft.

STO corresponds to an uncontrolled stop in accordance with stop category 0 of IEC 60204-1. The events that can activate the STO function are:

- An external request.
- A violation of another safety function.
- A fault detected by the internal diagnostics.

NOTICE

The drive always initiates in a safe state, which is cleared automatically after the startup is completed.

- When parameter ***Restart Behavior for Release of STO*** is configured to require an acknowledgment, acknowledgment is required also when the device is powered up, and not only when a safety function has been disengaged.

Table 7: STO Parameters

Parameter name[1]	Selections	Default value	Description
Activation Configuration (A)	De-energized (Function always on)	Safe Input (X33)	Specifies the safe digital input, which can be associated to the activation of the safety function.
	Safe Input (X33)		
	Energized (Function always off)		
Restart Behavior for Release of STO(B)	Direct restart	Direct restart	Specifies the restart behavior for STO.
	Nonsafe Acknowledge required		
	Safe Acknowledge required		
Digital Input Assignment for STO Restart Acknowledge (C)	Not selected	Not selected	Specifies the safe digital input, which can be associated to the STO restart acknowledgment.
	Safe Input (X33)		
Triggering Edge for STO Restart Acknowledge (D)	Rising edge	Rising edge	Specifies the change on the safe digital input, which is associated to the STO restart acknowledgment.
	Falling edge		

1) Parameters are identified with letters in the Safety configuration section in MyDrive® Insight. The letter is given in parentheses after the parameter name for each parameter in this table.

4.7 Safe Stop 1 Time-controlled (SS1-t)

Safe Stop 1 time-controlled (SS1-t) safety function triggers the deceleration to 0 speed in a controlled manner and activates the Safe Torque Off (STO) safety function after a specified time.

The features of the safety function are:

- The safety function Safe Stop 1 corresponds to a category 1 stop (controlled braking) in accordance with EN IEC 60204-1.
- The motor becomes torque-free and removes hazardous movements.

The SS1-t function operates with the time monitoring mode and activates the STO function when an application-specific time delay has passed.

It is possible to configure 2 separate SS1 function instances with individual parameter sets.

NOTICE

- Remember to configure parameters ***7.4.1 Safe Stop 1 Response*** and ***7.4.3 Safe Deceleration Ramp*** in parameter group ***7.4 SS1 SS2***.
- With the default settings for parameters in group ***7.4 SS1 SS2***, STO is activated after the timer ***Maximum time*** is expired without any ramping down of the motor when activating the SS1 function.

Parameters are identified with letters in the *Safety configuration* section in MyDrive® Insight. The letter is given in parentheses after the parameter name for each parameter in Table 8.

Table 8: SS1 Parameters

Parameter name	Selections	Default value	Description
SS1 Instance 1			
Activation Configuration (A)	De-energized (Function always on)	Energized (Function always on)	Specifies the safe digital input, which can be associated to the activation of the safety function.
	Safe Input (X33)		
	Energized (Function always off)		
Maximum Time (B)	2–3600000 ms	2 ms	The maximum time of the stop procedure.
Delay before Monitoring (C)[1]	1–60000 ms	1 ms	The time to ignore the deceleration after the activation of SS1.
Delay to Detect Limited State (D)[1]	1–60000 ms	1 ms	The time the speed has to be within the limits before activating the final state (early activation).
Deceleration Limit (E)[1]	1/500 Revolutions / (s*s)	0	The limit for the deceleration. a_SS1 = 0 means "No deceleration monitoring".
Limit for the Speed (F)[1]	2^-16 Revolutions/s	1	The limit within the speed is accepted as 0.
SS1 Instance 2			
Activation Configuration (A)	De-energized (Function always on)	Energized (Function always off)	Specifies the safe digital input, which can be associated to the activation of the safety function.
	Safe Input (X33)		
	Energized (Function always off)		

Danfoss Drives Oy © 2026.11

Table 8: SS1 Parameters - (continued)

Parameter name	Selections	Default value	Description
Maximum Time (B)	2–3600000 ms	2 ms	The maximum time of the stop procedure.
Delay before Monitoring (C)[1]	1–60000 ms	1 ms	The time to ignore the deceleration after the activation of SS1.
Delay to Detect Limited State (D)[1]	1–60000 ms	1 ms	The time the speed has to be within the limits before activating the final state (early activation).
Deceleration Limit (E)[1]	1/500 Revolutions / (s*s)	0	The limit for the deceleration. a_SS1 = 0 means "No deceleration monitoring".
Limit for the Speed (F)[1]	2^-16 Revolutions/s	1	The limit within the speed is accepted as 0.

1) Parameters C–F cannot be configured for SS1-t.

⚠ CAUTION

The SS1 delay function does not monitor the stopping of the drive. The time relevant for safety allows the drive to stop before Safe Torque Off is activated, and ensures that the system is stopped before Safe Torque Off is activated.

If a fault occurs, the drive does not come to a stop. It coasts after the time delay regardless of the speed of the drive.

Using SS1 delay may result in the motor still spinning when Safe Torque Off is activated.

- The risk analysis for the machine must indicate that this behavior can be tolerated.
- An interlock may be required.

4.8 Saving to Device

After configuring the safety parameters for the application, save them to the device.

1. In MyDrive® Insight, navigate to *Setup & Service* > *Functional safety* > *Safety configuration* > *Save to device*.
2. Click *Accept*.

   The parameters are verified and the status is updated from ***Ready*** to ***Verify***.

4.9 Validating and Generating a Commissioning Report

A commissioning report can be generated using MyDrive® Insight. The commissioning report describes the values set for the safety-related parameters in the drive.

1. In MyDrive® Insight, go to *Device* > *Setup & Service* > *Functional safety* > *Validate report*.
2. Go to *Device* > *Setup & Service* > *Functional safety* > *Commissioning Report* to see the commissioning report.

   After commissioning all safety functions, click the download icon on the upper right corner to download the report as a PDF file. It is recommended to save a copy of the commissioning report to an external location.
3. Store the acceptance test reports in the logbook of the machine.

The report must include:

- A description of the safety application.
- A description and revisions of safety components that are used in the safety application.
- A list of all safety functions that are used in the safety application.
- A list of all safety-related parameters and their values. Listing parameters and values not related to safety is also recommended.
- Documentation of startup activities, with references to failure reports and resolution of the failures.
- The test results for each safety function, all safety parameter values including the CRC value of the safety configuration, dates of the tests, and confirmation by the test personnel.

4. Validate the commissioning report.
   a. Check that the hardware and configuration information is correct and that the software versions of safety-related components and subsystems are correct.
   b. Check that the information of the commissioned module matches the information in the commissioning plan and commissioning report.

IMPORTANT: After each change or maintenance to the system, new acceptance test reports must be stored in the logbook of the machine.

Danfoss Drives Oy © 2026.11

5 Safe Fieldbus

5.1 PROFIsafe

PROFIsafe is an additional safety protocol on top of a standard transmission system (PROFINET/PROFIBUS). PROFIsafe uses several technologies to ensure the validity and status of the fieldbus communication, making it reliable to use with safety devices.

These measures include:

- Consecutive numbering.
- Watchdog time monitoring with acknowledgment.
- Codename per communication relationship.
- Cyclic redundancy check for data integrity.

Communication over the non-safe transmission systems is called the "black channel".

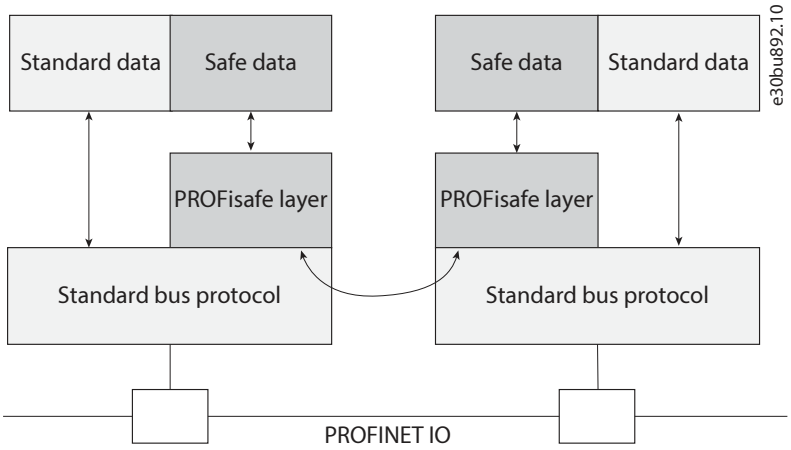

Figure 7: PROFIsafe Communication

5.2 PROFIsafe System

The drive can communicate with safety PLC via PROFINET. The exchanged data includes safety-related data and non-safe process data. For safety-related data, it goes through the PROFIsafe frame and matches PROFIdrive format.

The drive supports PROFIsafe V2.4 and V2.6. V2.6 is forward compatible with V2.4. To provide maximum flexibility and convenience, the GSD file contains 2 modules. Select 1 of the following modules according to the requirement to set up communication between the PLC and drive:

- Standard Telegram 30 (PROFIsafe 2.4): 3 octets CRC checksum
- Standard Telegram 30 (PROFIsafe 2.6.1): 4 octets CRC checksum

5.3 PROFIsafe Frame

The PROFIsafe frame, which is exchanged between the safety PLC (F-host) and the safety follower (F-device), includes:

- Safety I/O data (F-I/O), which is used to control the drive safety process.
- A status/control byte, which is used for the PROFIsafe communication.
- A CRC signature, which ensures the validity of the frame.

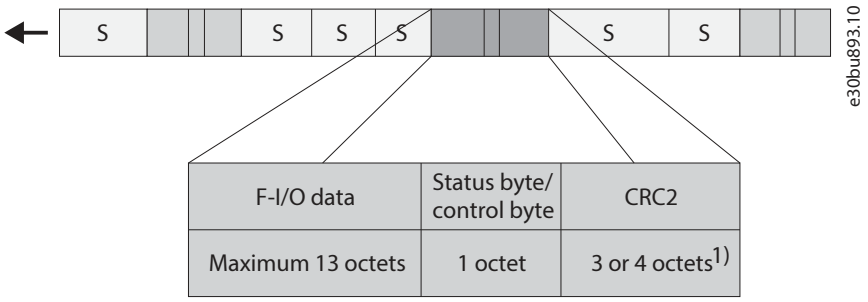

1) PROFIsafe V2.4 corresponds to 3 octets, and PROFIsafe V2.6 corresponds to 4 octets.

Figure 8: Structure of the PROFIsafe Frame (S=Standard Frame)

To indicate, monitor, and set the safety status of the F-device, see the status and control bytes descriptions in Table 9 and Table 10.

For more details, refer to *PROFIsafe – Profile for Safety Technology on PROFIBUS DP and PROFINET IO Technical Specification*.

Table 9: PROFIsafe Status Byte Description

Bit	Signal	Description
0	iPar_OK	Not used.
1	Device_Fault	Fault in F-device
2	CE_CRC	Communication fault: CRC
3	WD_timeout	Communication fault: watchdog timeout
4	FV_activated	Fail-safe values (FV) activated.
5	Toggle_d	Toggle Bit (F-device)
6	Cons_nr_R	Consecutive number has been reset.
7	–	Reserved

Table 10: PROFIsafe Control Byte Description

Bit	Signal	Description
0	iPar_EN	Not used.
1	OA_Req	Operator acknowledgment
2	R_cons_nr	Reset consecutive number
3	–	Reserved
4	Activate_FV	Fail-safe values (FV) to be activated.
5	Toggle_h	Toggle Bit (F-host)
6	–	Reserved
7	–	Reserved

5.4 Parameterization for PROFIsafe

When using the PROFIsafe, the protocol requires specific safety parameters (F-parameters) to be sent from F-host to F-device. These parameter values must be set to the drive via MyDrive® Insight and to F-host via its configuration tool. During startup, the values on the F-host are transmitted to the drive, and the drive checks the values against the values on the drive. The values configured to F-host and F-device must be the same for the safety communication to start.

Danfoss Drives Oy © 2026.11

The safety layer starts whenever the communication channel (PROFINET) is communicating cyclically. An unsuccessful initialization of the PROFIsafe protocol does not affect the PROFINET cyclic communication. The PROFINET cyclic communication can be used to read diagnostic information if the PROFIsafe parameterization fails.

Table 11: Settings in the Safety PLC

Value	Description
F source address	PROFIsafe address of PLC.
F destination address	The value must be the same as the F destination address on the AC drive.
F_WD_Time	The value must be the same as the F_WD_Time on the AC drive.
Safety telegram & F-I/O data of the safety telegram	The value must be the same as the safety telegram in the drive. F-I/O data must be mapped as described in the tables in 5.8 PROFIsafe Control Word and 5.9 PROFIsafe Status Word.

The following PROFIsafe-related parameters cannot be edited in the drive. They must have the same value in the safety PLC communication to the gateway chip in the drive over PROFIsafe. The values in the following table are defined in the fieldbus GSD description file, which is provided for the gateway chip in the drive by Danfoss, and must not be modified.

IMPORTANT: The drive has Type 1 of F-Address-Check, it means only F_DestAdd is checked by the drive.

IMPORTANT: Perform a commissioning test to ensure the correctness of the iParameter of the drive.

Table 12: Non-editable F-parameters

Parameter	Value	Unit	Description
F check iPar	0 = NoCheck	–	Manufacturer-specific iPar check.
F CRC length	0 = 3 bytes or 4 bytes CRC(1)	–	CRC2 signature length.
F block ID	1 = F iPar CRC within F parameter block	–	Parameter block type identification.
F Par version	1 = V2 Mode	–	Version no. of F parameters.
F SIL	8 = SIL 3	–	Employed SIL level of F-device.

1) Depends on the PROFIsafe version: V2.4, 3 bytes CRC; V2.6, 4 bytes CRC.

5.5 PROFIsafe Watchdog Time

Use the F-parameter watchdog time (F_WD_Time) to determine a watchdog time for the communication between F-host and F-device.

The minimum watchdog time has 4 parts:

- DAT = Device Acknowledgment Time. The F-device receives a frame, processes it, and prepares a new frame to send.
- Bus = the transfer time of the frame from the drive to the F-host.
- HAT = Host Acknowledgment Time. F-host receives a frame, processes it, and generates a new frame.
- Bus = the transfer time of the frame from the F-host to the drive.

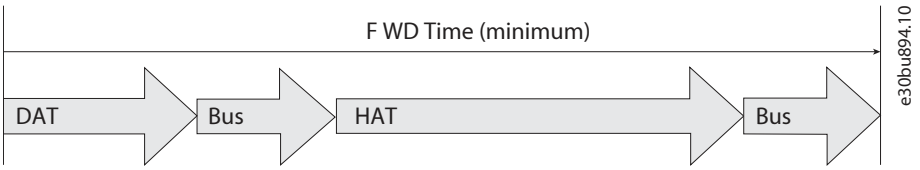

Figure 9: PROFIsafe Watchdog Time

Sometimes, it is difficult to determine the bus transfer time that is used to calculate the watchdog time. For more information on the cycle times, see the user guides of the specific fieldbus. The F_WD_Time can be calculated via the following formula: $F_WD_Time = DAT + HAT + 2xBT$

Table 13: Parts of Watchdog Time

Symbol	Name	Description
DAT	Device Acknowledgment Time	60 ms for the complete drive system.
HAT	Host Acknowledgment Time	Application-specific.
BT	Bus Cycle Time	The bus cycle time.

The F-parameter F_WD_Time must have a value that is slightly greater than the sum of DAT, HAT, and 2 times the bus transfer time. It is recommended not to exceed the calculated value by more than 30%. Setting a shorter watchdog time does not affect the safety of a system, but it can cause a fault and make the drive trip.

For example, if HAT is 4 ms and the PROFINET cycle time is 4 ms, F_WD_Time should be set to: $F_WD_Time = (DAT + HAT + 2xBT)x1.3 = (60ms + 4ms + 2x4ms)x1.3 = 94ms$

> IMPORTANT: If there is extreme electromagnetic interference, the communication systems use retry mechanisms to increase the robustness of the system. Before setting the F_WD_Time, it is recommended to find the number of retries of each connection and adjust the minimum watchdog time if necessary.

If "Manual assignment of the F-monitoring time" is not activated in the engineering tool (TIA Portal), the tool will automatically calculate the required value for F_WD_TIME based on the configured project. This ensures that the watchdog time is set appropriately without manual calculation.

5.6 PROFIsafe Safety Function Response Time (SFRT)

PROFIsafe specifies a safety function response time (SFRT), during which the safety system must react to a fault in the system. The SFRT includes all individual delays, including the bus transfer times. All of these elements have minimum and maximum delays, and the actual delay is likely to be somewhere in between these values. For safety reasons, every communication cycle has its own watchdog time $WDTime_i$ after which the safe state is activated if a fault occurs in that communication cycle.

The safety function response time is calculated using the following formula: $SFRT = \sum_{i=1}^{n} WCDT_i + \max_{i=1,2\ldots,n}(WDTime_i - WCDT_i)$

Table 14: Components in the Safety Function Response Time Calculation

Abbreviation	Definition
SFRT	Safety Function Response Time
$WCDT_i$	Worst Case Delay Time of entity i
$WDTime_i$	Watchdog Time of entity i. See 5.5 PROFIsafe Watchdog Time.

Adding the worst case delay times to the components of the safety system gives the total worst case delay time, as stated in Table 15.

Danfoss Drives Oy © 2026.11

Table 15: Time Parameters

Device	Worst case delay time	Watchdog time
The complete AC drive system	120 ms	Recommended 250 ms or more

5.7 PROFIdrive on PROFIsafe

The drive supports PROFIsafe standard telegram 30. The following sections describe the PROFIdrive on PROFIsafe standard telegram 30 bits. In a PLC program, address the safety functions using bits while not bytes.

Byte 0 is PROFIdrive on PROFIsafe-specific and byte 1 is vendor-specific.

5.8 PROFIsafe Control Word

Table 16: PROFIsafe Control Word

Byte	Bit	Name	Additional information
Byte 0	0	STO	–
	1	SS1_INSTANCE_1	–
	2–6	Not supported	Bits that are not supported are set to 0.
	7	INTERNAL_EVENT_ACK	–
Byte 1	0	ACK_SAFETY	–
	1–7	Not supported	Bits that are not supported are set to 0.

- Byte 0 Bit 0, STO
  - Bit 0.0=0, Safe Torque Off (zero-active).
  - Bit 0.0=1, No Safe Torque Off.
- Byte 0 Bit 1, SS1_INSTANCE_1
  - Bit 0.1=0, safe stop 1 (zero-active).
  - Bit 0.1=1, No safe stop 1.
- Byte 0 Bit 7, INTERNAL_EVENT_ACK
  - When this bit value changes from 1 to 0 (1→0 edge), an acknowledgment is given to the safety fault buffer. Fault entries in the safety fault buffer are shifted to the last acknowledged fault situation. Faults, which are still present or not acknowledgeable, appear again in the actual fault situation. For more information, refer to the PROFIdrive profile description at www.profibus.com.
- Byte 1 Bit 0, ACK_SAFETY
  - Acknowledge safety function (1 → 0) for STO

5.9 PROFIsafe Status Word

Table 17: PROFIsafe Status Word

Byte	Bit	Name	Additional information
Byte 0	0	POWER_REMOVED	If STO is triggered by, for example, safe DI or by SS1 timer expired, this bit also indicates “active”.
	1	SS1_INSTANCE_1	If SS1 is triggered by, for example, safe DI, this bit also indicates “active”.
	2–6	Not supported	Bits that are not supported are set to 0.
	7	INTERNAL_EVENT	–
Byte 1	0	SAFETY_EVENT	–
	1–2	Not supported	Bits that are not supported are set to 0.
	3	SAFE_INPUT	State of terminals X33 for Safe Input
	4–7	Not supported	Bits that are not supported are set to 0.

- Byte 0 Bit 0, STO
  - Bit 0.0=0, Safe Torque Off inactive.
  - Bit 0.0=1, Safe Torque Off active (one-active).
- Byte 0 Bit 1, SS1_INSTANCE_1
  - Bit 0.1=0, safe stop 1 instance 1 inactive.
  - Bit 0.1=1, safe stop 1 instance 1 (one-active).
- Byte 0 Bit 7, INTERNAL_EVENT
  - Bit 0.7=0, no safety fault.
  - Bit 0.7=1, safety fault present.
- Byte 1 Bit 0 SAFETY_EVENT
  - 1: An unacknowledged safety function is active (STO). The safety node in the drive expects an acknowledge via ACK_SAFETY or local Safe Input.
  - 0: Acknowledge not needed.
- Byte 1 Bit 3 SAFE_INPUT
  - 1: Local Safe Input in the requested state.
  - 0: Local Safe Input not in the requested state.

5.10 PROFIenergy Support

This device supports PROFIenergy version 1.3, allowing it to participate in energy efficiency management for motor drive use cases. The management is typically coordinated by the system-wide PLC.

Danfoss Drives Oy © 2026.11

6 Installation

6.1 Installation for System Modules with +BEF2

Prerequisites:

For motor connection, AC mains connection, and control wiring, follow the instructions for safe installation in the documentation shipped with the drive.

All wiring related to functional safety must be done on terminal block X33. See Figure 10 for the location of the terminals.

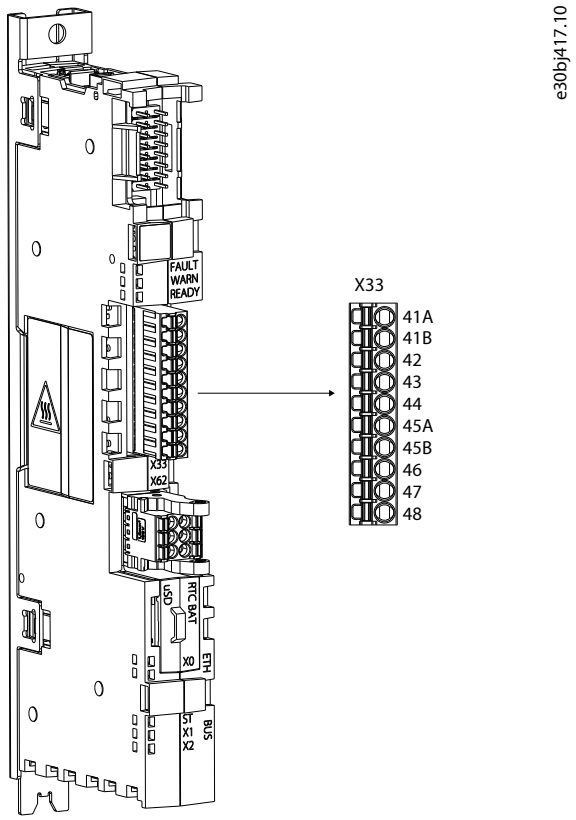

Figure 10: Functional Safety Terminals in the Modular Control Unit

Table 18: Functional Safety I/O Terminal (X33) Functions in System Modules

Numbering	Terminal name	Function
41A[(1)]	24 V	+ 24 V DC Output
41B[(1)]	24 V	+ 24 V DC Output
42	S.INA+	+ Safe Input Channel A
43	S.INB+	+ Safe Input Channel B
44	S.FB+	+ STO Feedback
45A[(1)]	GND	0 V/GND
45B[(1)]	GND	0 V/GND
46	S.INA-	- Safe Input Channel A

Table 18: Functional Safety I/O Terminal (X33) Functions in System Modules - (continued)

Numbering	Terminal name	Function
47	S.INB-	- Safe Input Channel B
48	S.FB-	- STO Feedback

1) Terminals 41A, 41B, 45A, and 45B have double pins to make connections easier.

Due to the galvanic isolation of the safe inputs, various connections and different polarities are possible in the wiring.

See Figure 11 and Figure 13 for connection examples.

Setups with the same voltage level on both channels (+24 V) are supported as well as setups with different voltage levels (+24 V and GND).

NOTICE

DANGEROUS VOLTAGE LEVEL

- To avoid stacking and drifting of voltages to a dangerous level, interconnect GND PELV of the drive and the external safety device.

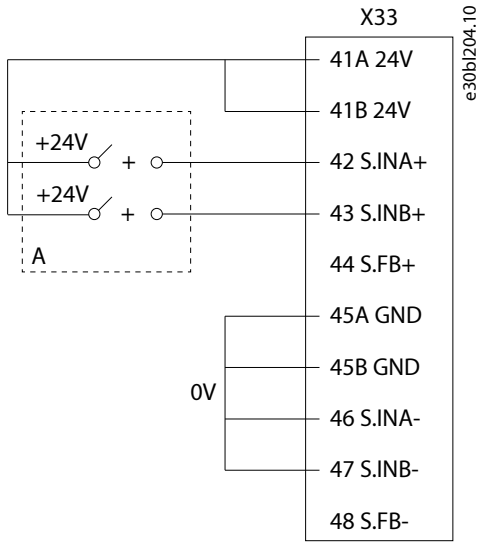

A	Safety actuator

Figure 11: STO Connection Example for System Modules with +BEF2 Using Same Polarity

Danfoss Drives Oy © 2026.11

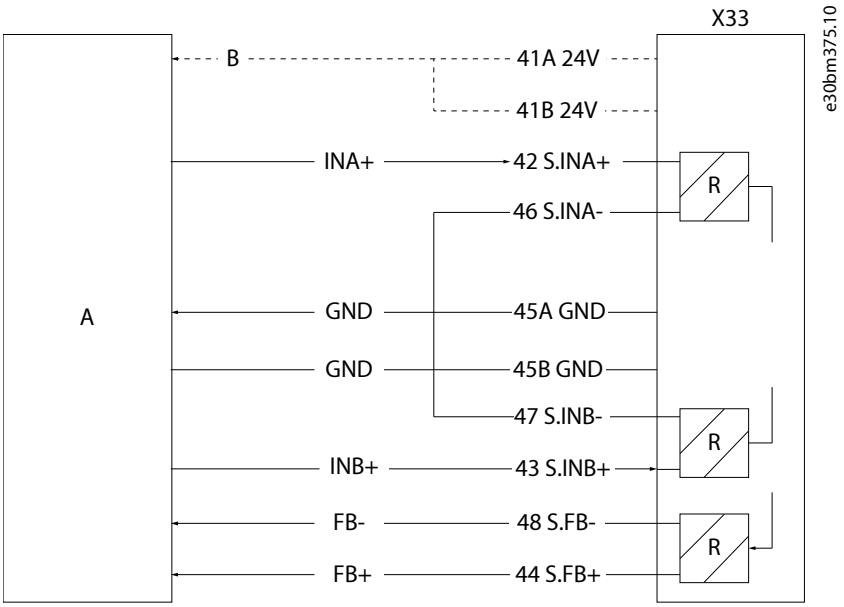

Figure 12: External Safety Device Connection Example for System Modules with +BEF2 Using Same Polarity

A	External safety device	B	Supply (optional)

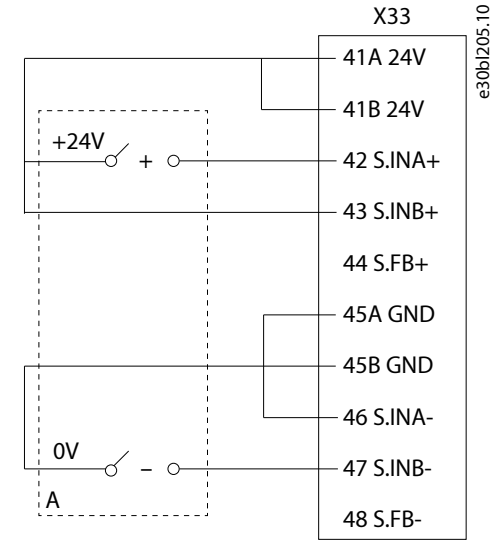

Figure 13: STO Connection Example for System Modules with +BEF2 Using Different Polarities

A	Safety actuator

NOTICE

SWITCHING S.INA- OR S.INB- SIGNALS

When switching S.INA- or S.INB- signal, it is essential to conduct periodic tests to ensure compliance with EN IEC 61800-5-2. This practice is crucial to prevent the accumulation of potential sleeping faults within the safety input.

- To maintain the integrity of the safety system, periodic testing of the safety inputs, by requesting it, is required:

  It is required for PL e or SIL 3 to conduct a functional test every 3 months to detect any failure or malfunction of the safety input.

  It is required for PL d or SIL 2 to conduct a functional test every 12 months to detect any failure or malfunction of the safety input.

- Perform the tests by following the commissioning test sequence. For instructions, see 8.4 Commissioning Test for Safety Function STO and 8.5 Commissioning Test for Safety Function Safe Stop 1 Time-controlled (SS1-t). Refer to 10.4 Event List to resolve any faults or warnings that occur during testing.
- If the S.INA- or S.INB- signals are always connected to the GND potential and are not switched, this periodic testing is not required by the drive.

Danfoss Drives Oy © 2026.11

7 Configuration Tools

7.1 Overview

MyDrive® Insight is a platform-independent software tool for the commissioning, engineering, and monitoring drives. MyDrive® Insight is also used to configure the parameters of the drive.

MyDrive® Insight is the only tool to set up the standard safety-related functions and features of iC7 drives. Advanced safety functions and safe fieldbuses require MyDrive® Insight.

For detailed information on MyDrive® Insight features, see the online help in MyDrive® Insight.

7.2 System Configuration Security

iC7 drives are equipped with mandatory and configurable security features that prevent unauthorized access to the drive, ensure secure connectivity to the drive, and protect the drive against unauthorized software modifications.

For more details on the security features included in the application software, refer to application software documentation.

Configurable security features can be adjusted according to application requirements. The parameters related to safety are password-protected.

7.3 Preparing for a PC Connection

Use these instructions to connect the drive or several drives to a PC with an RJ45 cable.

1. Connect an RJ45 cable to the PC.

   To connect several drives at the same time, use an Ethernet switch between the PC and the control unit.

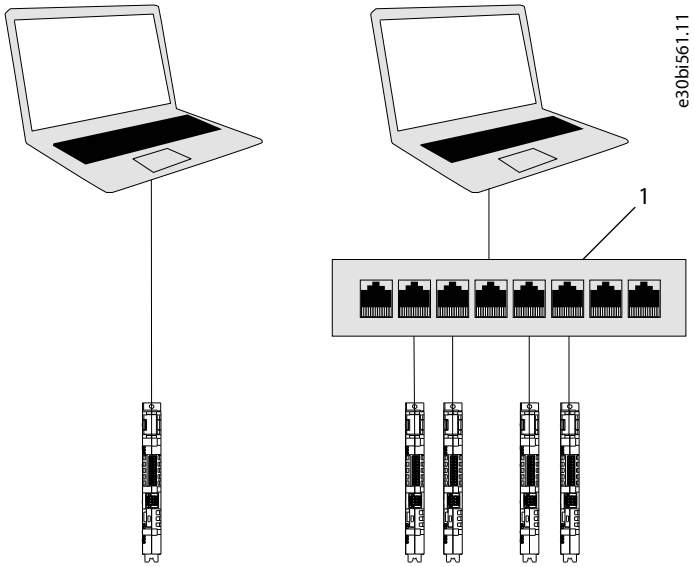

Figure 14: Connecting the Drive to a PC

1	Ethernet switch

2. Connect the cable coming from the PC or from the Ethernet switch to the Ethernet port X0 on the control unit of the drive.
3. See the application guide for information on the next steps.

7.4 MyDrive Insight

7.4.1 Installing MyDrive® Insight

1. To install the tool, go to https://suite.mydrive.danfoss.com/content/tools.
2. Install MyDrive® Insight.

   For more information on how to use the tool, see the online help in MyDrive® Insight.
3. Use MyDrive® Insight to connect the drive to a PC.

7.4.2 Backing up and Restoring Parameters

The parameter backup and restore functionality in MyDrive® Insight can be used to back up and restore all or part of the drive parameters.

1. Log into MyDrive® Insight® using credentials with appropriate access rights.
2. Go to *Device* > *Setup & Service* > *Parameters* > *Live*.
3. Click *Create backup/Restore* on the menu bar.

What to do next: For more information, see the MyDrive® Insight documentation.

7.4.3 Performing a Factory Reset

The factory reset can be performed separately for each parameter group, or for all settings.

1. In MyDrive® Insight, go to *Device* > *Setup & Service* > *Restore* > *Select Restore Content*.
   - To reset all settings, select *All Settings*.
   - To reset only the functional safety settings, select *Functional Safety Configuration Variables*.

After performing a factory reset, all parameters are in a **Not commissioned** state and their values are restored to default values. A factory reset also resets the user name and password to their defaults. Parameters must be configured again or alternatively, restored from a backup.

NOTICE

After performing a factory reset, all parameters have to be checked and set again.

- Parameters for safety functions that are not used must also be checked. For example, parameters must also be checked for SS1 functions, even if only STO function is used and vice versa.

7.4.4 Updating Software

Prerequisites:

NOTICE

- The drive must not be running during the update process.
- Updating software related to functional safety requires logging into MyDrive® Insight with credentials that have appropriate access rights.

Do not power down or restart the devices during a software update. Creating a backup of the current parameters before updating any software is highly recommended, in case parameters need to be restored after the software update is completed. For instructions, see 7.4.2 Backing up and Restoring Parameters.

1. Log into MyDrive® Insight using credentials with appropriate access rights.

Danfoss Drives Oy © 2026.11

2. In MyDrive® Insight, go to *Device* > *Setup & Service* > *Software update*.
3. To update software, select the file to be updated in the drive.
4. If relevant, select *Allow devices to restart* to allow the devices to restart after the update is finished. This selection is optional.
5. Check the installed version, available version, and status.
6. Click *Update*.
7. Check the alert message and click *Yes*/*No*.
8. Click *Done* to acknowledge and finish the update.
9. Verify that the software update has been successful.
   a. Go to *Device info* > *Extended device information* and verify the firmware version.
   b. Run the commissioning test.

   A commissioning test is required after each modification of the installation of an application that involves safety functions. For more information, see 8.2 Commissioning Test.

What to do next: For more information, see the MyDrive® Insight documentation.

Troubleshooting the software update

1. Restart the device.
2. Check that the device is in normal state and that there are no errors.
3. Check the software package version and compatibility, and retry the software update.

   If the problem persists and the device stays in error mode, contact Danfoss.

8 Commissioning

8.1 Commissioning Safety

When commissioning or recommissioning the system, observe the following:

- Secure the site in accordance with regulations, for example, barriers or warning signs. Only qualified personnel can commission or recommission the system.
- Check the documentation of the machine control system for detailed information and specifications.
- Make sure that no personal injury or material damage can occur during the commissioning or recommissioning, even if the plant or machine moves unintentionally.
- Before starting the commissioning, read all safety guidelines and precautions in the drive-specific documentation.
- Observe applicable laws and legislation when running a system without safety or with reduced safety.
- Be aware that the commissioning report focuses on iC7 functional safety and is not necessarily sufficient for the testing and documenting of all safety functions in the system or machine.

8.2 Commissioning Test

Before conducting the commissioning test, identify which functional safety option is installed, for example, +BEF1 or +BEF2. Perform the appropriate commissioning test based on this identified option. This process ensures that the test effectively validates the specific safety functions configured in the drive system.

The commissioning test for systems with safety functions is focused on validating the functionality of safety functions configured in the drive system. The test objective is to verify proper configuration of the defined safety functions and to examine the response of specific monitoring functions to the explicit inputs of values outside tolerance limits. The tests must cover all drive-specific safety functions running in the final setup.

A commissioning test is required:

- After the configuration of each machine.
- After any changes to the drive safety configuration.
- After changes to the machine (as per applicable standards and regulations).
- After the exchange of the complete drive, or any safety-related hardware or software.

During and after the commissioning:

- Document each individual step of the test.
- Note the checksum of the drive safety configuration in records.
- Do not release the system unless the system has successfully passed all individual steps of the test.
- Restart the drive and check that the motor runs normally.

NOTICE

COMMISSIONING TEST

After installing the safety functions, perform a commissioning test.

A successful commissioning test is required after the initial installation, and after each change to the installation or application involving functional safety.

If the commissioning test fails, safe operation cannot be guaranteed.

Danfoss Drives Oy © 2026.11

8.3 Commissioning Checklist

The system integrator/machine manufacturer must perform a commissioning test of the iC7 safety functions to verify and document the correctness of the safety configuration. The system integrator/machine manufacturer hereby proves to have tested the effectiveness and the completeness of the safety functions used. The commissioning tests must be performed based on the risk analysis. All applicable standards and regulations must be adhered to.

Before the commissioning test:

- Check that the machine is properly wired.
- All safety equipment, such as protective door monitoring devices, light barriers, or emergency stop switches are connected and ready for operation.
- All motor parameters and command parameters are correctly set on the drive.

Table 19: Commissioning Checklist for System Modules

Check type	Task	Approved
Mechanical installation	Check that the units have been installed according to the documentation included in the shipment.	☐
	Check that the operating conditions are within the allowed range.	☐
	Check that the packaging materials and tools have been removed from the installation area.	☐
Electrical installation	Check that the appropriate supply (input power) fuses are installed.	☐
	24 V DC power supply is properly connected and secured with strain relief, and the polarity of the supply voltage connection is correct.	☐
	I/O wiring is appropriately clamped, marked, tightened, and protected.	☐
Functional safety commissioning	Check that the system is in an operational state when the safety function is required.	☐
	Make sure that the acknowledgment method has been configured appropriately for the application (for example, manual or automatic acknowledgment).	☐
	Activate the safety function by requesting it.	☐
	Verify that the system functions as desired.	☐

8.4 Commissioning Test for Safety Function STO

Table 20: Commissioning Test for STO

Test procedure		Approved
1	Power on the INU.	☐
2	Make sure that the other STO function parameters are configured correctly.	☐
3	Check that no safety faults are present.	☐
4	Make sure that the motor runs and stops freely.	☐
5	Remove the 24 V DC voltage supply to STO input terminals using the safety device while the system module drives the motor (that is, the mains supply is not interrupted).	☐
6	Make sure that the drive STO is activated immediately after the STO request.	☐
7	If STO feedback is used, check the state of the STO feedback to verify that STO is activated. See Figure 5.	☐

Table 20: Commissioning Test for STO - (continued)

Test procedure		Approved
8	Verify that the motor coasts. It may take a long time for the motor to stop.	☐
9	If a control panel is mounted, check if ***STO activated*** is shown on the control panel.	☐
	If the control panel is not mounted, check if ***STO activated*** is listed in the event log.	
10	Reapply 24 V DC to STO inputs.	☐
11	**If the fault is configured to direct restart**: By deactivating the fault, the motor becomes operational and runs within the original speed range. **If automatic acknowledgment is not used**: Set an acknowledgment (for example, with an acknowledgment button). The acknowledgment is configured in the safety parameters.	☐
12	Check that there are no unwanted errors in the drive.	☐
13	Ensure that the motor becomes operational and runs within the original speed range.	☐

8.5 Commissioning Test for Safety Function Safe Stop 1 Time-controlled (SS1-t)

Table 21: Commissioning Test for STO Applications using Safe Stop 1 Time-controlled (SS1-t)

Test procedure		Approved
1	Power on the INU.	☐
2	Make sure that the SS1-t function parameters are configured correctly.	☐
3	Check that no safety faults are present.	
4	Make sure that the motor runs and stops freely.	☐
5	Request the SS1-t function by de-energizing the inputs assigned to it.	☐
6	Verify that the motor ramps down according to the configured maximum time. The configured time is also shown in the commissioning report.	☐
7	If a control panel is mounted, check if ***STO activated*** is shown on the control panel.	☐
	If the control panel is not mounted, check if ***STO activated*** is listed in the event log.	
8	If STO feedback is used, check the state of the STO feedback to verify that STO is activated. See Figure 5.	☐
9	Energize the inputs that are assigned to the STO function, or deactivate the STO request via fieldbus.	☐
10	**If the fault is configured to direct restart**: By deactivating the fault the motor becomes operational and runs within the original speed range. **If automatic acknowledgment is not used**: Set an acknowledgment (for example, with an acknowledgment button). The acknowledgment is configured in safety parameters.	☐
11	Ensure that the motor becomes operational and runs within the original speed range.	☐

8.6 Validating and Generating a Commissioning Report

A commissioning report can be generated using MyDrive® Insight. The commissioning report describes the values set for the safety-related parameters in the drive.

1. In MyDrive® Insight, go to *Device* > *Setup & Service* > *Functional safety* > *Validate report*.
2. Go to *Device* > *Setup & Service* > *Functional safety* > *Commissioning Report* to see the commissioning report.

Danfoss Drives Oy © 2026.11

After commissioning all safety functions, click the download icon on the upper right corner to download the report as a PDF file. It is recommended to save a copy of the commissioning report to an external location.

3. Store the acceptance test reports in the logbook of the machine.

The report must include:

- A description of the safety application.
- A description and revisions of safety components that are used in the safety application.
- A list of all safety functions that are used in the safety application.
- A list of all safety-related parameters and their values. Listing parameters and values not related to safety is also recommended.
- Documentation of startup activities, with references to failure reports and resolution of the failures.
- The test results for each safety function, all safety parameter values including the CRC value of the safety configuration, dates of the tests, and confirmation by the test personnel.

4. Validate the commissioning report.
   a. Check that the hardware and configuration information is correct and that the software versions of safety-related components and subsystems are correct.
   b. Check that the information of the commissioned module matches the information in the commissioning plan and commissioning report.

IMPORTANT: After each change or maintenance to the system, new acceptance test reports must be stored in the logbook of the machine.

9 Operation and Maintenance

9.1 Overview of Functional Tests

Safety functions in the drive do not require scheduled proof testing. Depending on the configuration of the safety inputs, periodic testing might be required to ensure that the drive complies with relevant standards.

IMPORTANT: Safety input circuitry only diagnoses discrepancies between redundant inputs. Therefore, any proof testing or diagnostics for input safety input cabling must be considered. Refer to application-specific standards and requirements for scheduled functional and proof testing.

NOTICE

SWITCHING S.INA- OR S.INB- SIGNALS

When switching S.INA- or S.INB- signal, it is essential to conduct periodic tests to ensure compliance with EN IEC 61800-5-2. This practice is crucial to prevent the accumulation of potential sleeping faults within the safety input.

- To maintain the integrity of the safety system, periodic testing of the safety inputs, by requesting it, is required:

  It is required for PL e or SIL 3 to conduct a functional test every 3 months to detect any failure or malfunction of the safety input.

  It is required for PL d or SIL 2 to conduct a functional test every 12 months to detect any failure or malfunction of the safety input.
- Perform the tests by following the commissioning test sequence. For instructions, see 8.4 Commissioning Test for Safety Function STO and 8.5 Commissioning Test for Safety Function Safe Stop 1 Time-controlled (SS1-t). Refer to 10.4 Event List to resolve any faults or warnings that occur during testing.
- If the S.INA- or S.INB- signals are always connected to the GND potential and are not switched, this periodic testing is not required by the drive.

The drive safety system mission time is 20 years. After 20 years, the whole unit must be replaced.

⚠ WARNING

COMPONENT FAILURE IN FUNCTIONS RELATED TO SAFETY

If a component failure occurs in functions related to safety, the drive must be replaced by authorized personnel.

- It is not allowed to modify or repair the safety circuitry in any way.

9.2 Diagnostics

The iC7 drives include many diagnostic functions to ensure the integrity of safety functions. Diagnostics are, for example, temperature monitoring, internal voltage monitoring, and safety function monitoring. The drive issues functional safety-related fault codes if any are present. For safety-related fault codes, see 10.4 Event List.

The Diagnostic Test Interval (DTI) depends on the safety function and the diagnostic function. The maximum DTI and Fault Reaction Time (FRT) for each safety function are listed in 11.1 Functional Safety Standards and Performance.

If functional safety-related diagnostics detects a failure, the relevant safety functions are always set to a safe state.

Multiple undetected hardware failures may lead to a mode where an external STO request does not lead to the de-energizing of the motor. The PFH/PFD values stated in 11.2.2 PFH and PFD Data for Air-cooled System Modules and Enclosed Drives and 11.2.3 PFH and PFD Data for Liquid-cooled System Modules reflect the probability of this fault. Any other STO-related, internal failures lead directly to an unrequested activation of the STO function, or affect only 1 of the 2 redundant STO channels.

Danfoss Drives Oy © 2026.11

9.3 Installation and Maintenance in High Altitudes

If the drive is used in high altitudes, take additional measures to ensure the integrity of the safety system. Since the safety system includes controllers which are affected by cosmic radiation, it must be taken into account that the cosmic ray flux is higher in high altitudes. The higher the flux of cosmic rays is, the higher is the risk of Soft Error Rate (SER) affected to the controllers.

To mitigate this issue, update the safety system controller software at certain intervals depending on the altitude of the installation. The software update rewrites the Read Only Memory (ROM) of the safety system. Random Access Memory (RAM) is reinitialized every time the drive boots up. These actions reset any undetected failures in the memory which might be caused by cosmic rays.

Because SER affects the PFD and PFH values of the drive, the performance of the safety system is affected by high altitude. PFD and PFH values are given for different altitudes and the given values assume that the safety system software is updated according to 11.2.2 PFH and PFD Data for Air-cooled System Modules and Enclosed Drives and 11.2.3 PFH and PFD Data for Liquid-cooled System Modules and that all maintenance procedures are followed accordingly.

9.4 Drive and Component Replacement

If an internal fault leads to a permanent defect, the drive or its components must be replaced. The safety-related components of the system modules are not repairable.

Only Danfoss authorized, qualified personnel are allowed to replace functional safety-related components. The replaceable components related to functional safety are the modular control unit and the power unit, as described in chapter 3.2 Functional Safety System Description.

Before installation, verify that the replacement power unit or control unit includes functional safety capability. Power units and control units with functional safety capability have a **Functional Safety** marking on the replacement module sticker. See Figure 15 for an example of the **Functional Safety** markings.

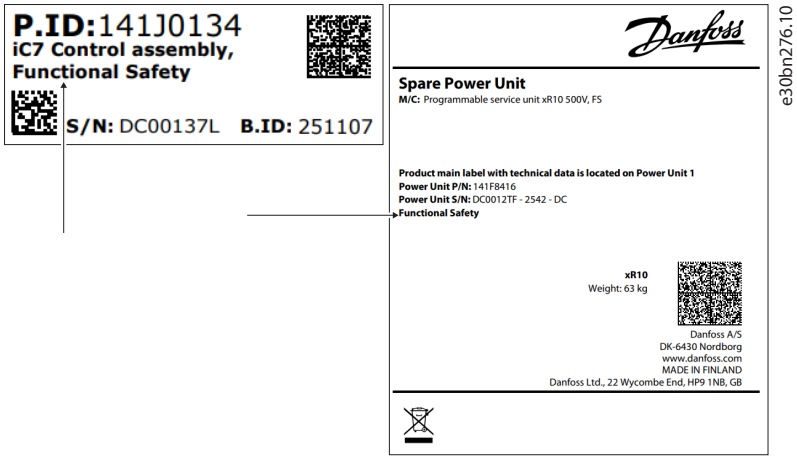

Figure 15: Example of Functional Safety Markings on Control Unit and Power Unit Stickers

After replacement, both the drive and its safety functions must be commissioned. Refer to the product-specific guides for detailed commissioning instructions, and follow the procedures described in 8 Commissioning.

The defective drive or component with functional safety capability must be disposed of in accordance with disposal guidelines. For details on disposal, see *Recommended Disposal* in the product-specific design guide.

IMPORTANT: It is strictly prohibited to repair or repurpose a disposed drive with functional safety-related components or any of the disposed functional safety-related components.

10 Troubleshooting

10.1 Status LEDs

Table 22: Status LEDs

LED	Color	Status	Meaning
Ready	White	Off	Check if: • The drive is powered off. • The drive is not ready.
		Blinking	The drive is starting up.
		Steady	There are no active faults, and the drive is ready to operate.
Warning	Orange	Off	There is no warning.
		Steady	The drive is not ready to run. Check if: • Safety configuration is needed. • STO active or STO acknowledge is needed. • I/O Failure or I/O Failure acknowledge needed. • STO response is configured as fault (with application).
Fault	Red	Off	There are no active faults and the drive is ready to operate.
		Steady	The drive is in a faulty state. The fault condition may have been triggered due to 1 of the following reasons: • Power unit and control connection failure • Hardware or software errors in the drive

10.2 Instances of the STO Function and STO Feedback Output

Table 23: Instances of STO Feedback for Systems with Modular Control

State	Feedback state[1]	Additional information
Standard function	De-energized	The motor is running and no safety function is active. STO feedback is de-energized.
STO state is reached	Energized	STO is requested, and a safe state is reached. STO state is reached and connection to all power units is established. STO output is de-energized.
Configuration needed	De-energized	Safe inputs must have a validated configuration to ensure that all power units have reached a safe input state. The connected power units are a part of the configuration, and without a validated configuration, the safe input cannot assume to have a connection to all power units established.
Software update	De-energized	During software update, the state of the safe output is not reliable. STO output is de-energized.
Bootloader and startup	De-energized	The bootloader does not communicate and does not know the state of the STO output on the power units. At startup, the communication is not yet established and the safe input card does not know the state of the safe output on the power units.

Danfoss Drives Oy © 2026.11

Table 23: Instances of STO Feedback for Systems with Modular Control - (continued)

State	Feedback state[1]	Additional information
Internal failure	De-energized	Indicates a severe issue, for example, in the STO circuitry. It cannot be assumed that the Safety I/O knows that all STO outputs are de-energized.
Internal fatal failure	De-energized	Triggered when a fatal internal issue has occurred, for example, a CPU or RAM fault. The operation cannot be guaranteed, and it cannot be assumed that the safe outputs can be de-energized.

1) ***Energized:*** *STO_FB+ ⇨ STO_FB- circuit closed = current flow = logical "0" with low side driver configuration.* ***De-energized:*** *STO_FB+ ⇨ STO_FB- circuit open = no current flow = logical "1" with low side driver configuration.*

10.3 Safety Function Fault Recovery

A fault in a safety circuit can lead to safe state or fail-safe state activation. STO activation is determined by the event list in MyDrive® Insight and on the control panel.

With a fail-safe state, STO is activated, and a relevant fault code is shown. Reset the fault before performing normal operation.

1. Check the reason for the event in the MyDrive® Insight event log.
2. Refer to 10.4 Event List for instructions on how to repair the cause of the fault.
3. Reset the fault.
   - If the fault is configured to direct restart: By deactivating the Emergency Stop button, the motor becomes operational and runs within the original speed range.
   - If the drive stays in a non-operating state after removing the fault, check the event log in MyDrive® Insight.
   - If safe or non-safe acknowledgment is required, perform the acknowledgment via a configured channel by sending an acknowledgment signal via fieldbus, digital I/O, or the control panel.

     The acknowledgment is configured in safety parameters.

If a failure in the safety system or a safety function prevents fault recovery, contact a local Danfoss representative. Provide the commissioning report of the safety parameter configuration. For more information, see the MyDrive® Insight documentation.

10.4 Event List

Table 24: Group 0x54FE

Number	Name	Cause	Solution
4628	STO activated.	Safe Torque Off has been activated.	If STO is activated unintentionally, check the following: • input cabling • external activation • external test pulse timing • relevant safety parameters

Table 25: Group 0x61FF

Number	Name	Cause	Solution
4608	Internal failure	An internal failure was detected in the safety system.	Restart the system. If the problem persists, contact Danfoss customer support.
4609	I/O failure detected	An I/O failure was detected in the safety system. See event details for more information.	Check the safety I/O circuit connections. If an external test pulse is used, ensure that the timing is within specification. See 3.3.5 Safety Input Properties.
4611	SS1	Safe Stop 1, instance 1 has been activated.	If SS1 is activated unintentionally, check the following: • input cabling • external activation • external test pulse timing • relevant safety parameters
4612	SS1	Safe Stop 1, instance 2 has been activated.	If SS1 is activated unintentionally, check the following: • input cabling • external activation • external test pulse timing • relevant safety parameters
4613	Warning detected	Detected a non-critical failure. The operation can continue.	Check event logs and messages in the user interface for additional information.
4614	Startup acknowledgment needed	Startup acknowledgment is needed.	Depending on the configuration, the acknowledgment can be given via: • Safe input • MyDrive® Insight • Fieldbus interface • Control panel
4615	Configuration mismatch	The detected safety system differs from the commissioned system.	The detected safety system differs from the commissioned system. If a power unit is replaced, recommission the system.
4616	No valid safety parameters available	The safety parameters are invalid or not present in the device.	Check the safety configuration in MyDrive® Insight. Make sure that all configuration steps are successfully verified and validated. Recommissioning of the safe module is required.
4633	Software update on safety module	Advanced safety unit is in a software update state.	The device stays in a safe state until the software update is successfully finished.
4634	Factory reset	Factory reset action triggered by the user.	After the factory reset has been performed, the safety configuration must be recreated.

Danfoss Drives Oy © 2026.11

Table 25: Group 0x61FF - (continued)

Number	Name	Cause	Solution
4635	Safety configuration changed	Safety parametrization action triggered by the user.	The safety configuration has been changed. Ensure that the configuration is correct before continuing. Major safety configuration changes may require a system restart.
4636	I/O failure acknowledgment needed	Due to the configuration, I/O acknowledge is needed.	If enabled, the safety function may require an acknowledgment to continue operation after a signal failure has been cleared.
4637	STO acknowledgment needed	Due to the configuration, STO acknowledge is needed.	If enabled, the safety function may require an acknowledgment to continue operation after an STO condition has been cleared.
4650	Parameter dependency checks failed	Check of the safety parameters failed.	Ensure that the safety configuration is valid. The possible errors may be related to: • input signal mapping • output signal mapping • timing parameters
4651	Parameter range check	The value of a parameter is out of the allowed range. The variable ID is provided as detail.	Make sure that the value of the given variable is set in the allowed range.
4652	Parameterization step failed	An attempt to change safety parameters failed.	Check if there is any detailed information in MyDrive® Insight. Make sure that the requested safety parameter change is valid. Check that the drive system does not have any unrelated special conditions, such as software update or drive commissioning, active. Try restarting the drive system. If the problem persists, contact Danfoss customer support.
4730	Information	Additional information from the advanced safety unit. See details.	The safety module has raised an indication that needs to be informed to the user. Further details can be found via the MyDrive® Insight event details.

11 Specifications

11.1 Functional Safety Standards and Performance

All safety functions in the iC7 system modules meet the requirements of the standards listed in this chapter.

Table 26: Functional Safety Standards and Performance

Directive or Standard		Version
European Union directives	Machinery Directive (2006/42/EC)	EN ISO 13849-1:2023
		EN IEC 61800-5-2:2007
	EMC Directive (2014/30/EU)	EN IEC 61800-3:2018 – second environment
		EN IEC 61326-3-1:2017
	Low Voltage Directive (2014/35/EU)	EN IEC 61800-5-1:2017
Safety standards	Safety of Machinery	EN ISO 13849-1:2023, IEC 60204-1:2018
	Functional Safety	IEC 61508-1:2010, IEC 61508-2:2010, EN IEC 61800-5-2:2017
		UL 61800-5-2:2022
Safety function		EN IEC 61800-5-2:2017 Safe Torque Off (STO)
		UL 61800-5-2:2022 Safe Torque Off (STO)
		IEC 60204-1:2018 Stop Category 0
Safety performance	**IEC 61508:2010**	
	Safety Integrity Level	SIL 3
	Hardware Fault Tolerance (HFT)	1
	Subsystem Classification	Type B
	Average probability of dangerous failures on demand (PFDavg)[1]	See 11.2.2 PFH and PFD Data for Air-cooled System Modules and Enclosed Drives and 11.2.3 PFH and PFD Data for Liquid-cooled System Modules.
	Average frequency of dangerous failures per hour (1/h) (PFH)[1]	See 11.2.2 PFH and PFD Data for Air-cooled System Modules and Enclosed Drives and 11.2.3 PFH and PFD Data for Liquid-cooled System Modules.
	Proof Test Interval (T1)	20 years
	Mission Time (TM)	20 years
	ISO 13849-1:2023	
	Category	Cat 3
	Performance Level (PL)	PL e
Reaction time	Fault Reaction Time (FRT)	< 200 ms
Response time	Response time (from input to safe state)	< 100 ms
Diagnostics	Diagnostic Test Interval (DTI)	60 s
Mode of operation		High demand, Low demand

1) Proof tests can only be performed at Danfoss facilities when the drive is refurbished.

Danfoss Drives Oy © 2026.11

11.2 Technical Data

11.2.1 Digital Inputs, Outputs, and Auxiliary Voltages

Table 27: 24 V Digital Input for Safe Input for System Modules (+BEF2)

Function	Data
Input type	Single-ended/floating
Logic	• **Active Low**: STO function is activated due to: ◆ An external request ◆ A violation of another safety function ◆ A fault detected by the internal diagnostics • **Active High**: STO function is inactive.
Voltage level	0–24 V DC
Voltage level, logic 0 PNP	<5 V
Voltage level, logic 1 PNP	>11 V
Maximum voltage on input @ functional	30 V
Maximum voltage on input @ safe state	60 V
Input current	8 mA > I_c > 2 mA @ 24 V
Equivalent input resistance	3 kΩ < Ri < 12 kΩ @ 24 V
Isolation	Functional
Reverse polarity protection	Yes
Maximum input current off-state	< 2 mA

Table 28: 24 V Digital Outputs for STO Feedback

Function	Data
Output type	Sink/source
Voltage rating	24 V DC open collector/60 V maximum
Current rating	50 mA
Isolation	Yes
Overload protection	Yes
Reverse polarity protection	Yes
ON state voltage	>17.4 V
Off state leakage current	0.1 mA

Table 29: Auxiliary Voltages

Function		Data
24 V output, functional safety (X33)	Output voltage	24 V ±15%
	Maximum load	100 mA

11.2.2 PFH and PFD Data for Air-cooled System Modules and Enclosed Drives

PFH and PFD values vary based on drive type, the number of parallel power units, installation altitude, and software update interval. The calculations assume that the drive is power-cycled at least once per year. If the provided values are not suitable for the application, contact Danfoss for support on calculations specific to the installation altitude and required software update interval.

Table 30: PHF and PFD Values for Air-cooled System Modules and Enclosed Drives

Data	Altitude	Software update interval/ROM reset (years)	Drive reboot interval/RAM reset (months)	Power units							
				1	2	3	4	5	6	7	8
PFD	Sea level	20[1]	12	5.52E-05	8.92E-05	1.23E-04	1.57E-04	1.91E-04	2.25E-04	2.59E-04	2.93E-04
	1000 m (3280 ft)	20[1]	12	6.09E-05	9.80E-05	1.35E-04	1.72E-04	2.09E-04	2.46E-04	2.83E-04	3.21E-04
	2000 m (6560 ft)	20[1]	12	7.51E-05	1.20E-04	1.64E-04	2.09E-04	2.53E-04	2.98E-04	3.42E-04	3.87E-04
	3000 m (9840 ft)	15	12	7.91E-05	1.26E-04	1.72E-04	2.19E-04	2.66E-04	3.12E-04	3.59E-04	4.06E-04
	4000 m (13120 ft)	10	12	7.41E-05	1.18E-04	1.62E-04	2.06E-04	2.50E-04	2.94E-04	3.38E-04	3.82E-04
PFH	Sea level	20[1]	12	1.49E-09	2.16E-09	2.83E-09	3.50E-09	4.17E-09	4.84E-09	5.51E-09	6.18E-09
	1000 m (3280 ft)	20[1]	12	1.61E-09	2.34E-09	3.08E-09	3.81E-09	4.55E-09	5.28E-09	6.01E-09	6.75E-09
	2000 m (6560 ft)	20[1]	12	1.91E-09	2.80E-09	3.69E-09	4.58E-09	5.47E-09	6.36E-09	7.26E-09	8.15E-09
	3000 m (9840 ft)	20[1]	12	2.38E-09	3.52E-09	4.66E-09	5.79E-09	6.93E-09	8.07E-09	9.20E-09	1.03E-08
	4000 m (13120 ft)	20[1]	12	3.02E-09	4.49E-09	5.97E-09	7.44E-09	8.91E-09	1.04E-08	1.19E-08	1.33E-08

1) No update is needed during the mission time of the drive.

11.2.3 PFH and PFD Data for Liquid-cooled System Modules

PFH and PFD values vary based on drive type, the number of parallel power units, installation altitude, and software update interval. The calculations assume that the drive is power-cycled at least once per year. If the provided values are not suitable for the application, contact Danfoss for support on calculations specific to the installation altitude and required software update interval.

Danfoss Drives Oy © 2026.11

Table 31: PHF and PFD Values for Liquid-cooled System Modules

Data	Altitude	Software update interval/ROM reset (years)	Drive reboot interval/RAM reset (months)	Power units							
				1	2	3	4	5	6	7	8
PFD	Sea level	20[1]	12	5.71E-05	1.00E-04	1.43E-04	1.86E-04	2.29E-04	2.72E-04	3.15E-04	3.58E-04
	1000 m (3280 ft)	20[1]	12	6.28E-05	1.09E-04	1.55E-04	2.01E-04	2.47E-04	2.93E-04	3.39E-04	3.85E-04
	2000 m (6560 ft)	20[1]	12	7.69E-05	1.30E-04	1.84E-04	2.38E-04	2.91E-04	3.45E-04	3.98E-04	4.52E-04
	3000 m (9840 ft)	15	12	8.10E-05	1.37E-04	1.92E-04	2.48E-04	3.03E-04	3.59E-04	4.15E-04	4.70E-04
	4000 m (13120 ft)	10	12	7.60E-05	1.29E-04	1.82E-04	2.35E-04	2.88E-04	3.41E-04	3.94E-04	4.47E-04
PFH	Sea level	20[1]	12	1.57E-09	2.59E-09	3.61E-09	4.63E-09	5.65E-09	6.67E-09	7.69E-09	8.71E-09
	1000 m (3280 ft)	20[1]	12	1.69E-09	2.77E-09	3.86E-09	4.94E-09	6.03E-09	7.11E-09	8.20E-09	9.28E-09
	2000 m (6560 ft)	20[1]	12	1.99E-09	3.23E-09	4.47E-09	5.71E-09	6.96E-09	8.20E-09	9.44E-09	1.07E-08
	3000 m (9840 ft)	20[1]	12	2.46E-09	3.95E-09	5.44E-09	6.92E-09	8.41E-09	9.90E-09	1.14E-08	1.29E-08
	4000 m (13120 ft)	20[1]	12	3.10E-09	4.92E-09	6.75E-09	8.57E-09	1.04E-08	1.22E-08	1.40E-08	1.59E-08

1) No update is needed during the mission time of the drive.

11.3 Operating Conditions

Table 32: Operating Conditions for Functional Safety

Function	Data
Operating temperature	According to the drive specifications.
Storage temperature	According to the drive specifications.
Air humidity	According to the drive specifications (non-condensing).
Operating altitude	According to the drive specifications.
Environmental conditions	The product must be installed in an environment corresponding to EN IEC 61800-5-1:2017, PD2 non-condensing. If the installation environment may expose the product to condensation, Pollution Degree 3, increased vibration, or other adverse environmental conditions, appropriate mitigation measures must be applied (for example, IP54/NEMA 12 cabinet, cabinet heaters, dehumidification, vibration dampers, or mechanical isolation) to ensure that the functional safety circuitry always operates under PD2 non-condensing conditions and that the environmental requirements of the drive specifications are met.

11.4 Cable Specifications

Table 33: Cable Sizing for Connectors X31, X32

Wire type	Cross-section [mm^2 (AWG)]	Stripping length [mm (in)]
Solid	0.5–1.5 (24–16)	10 (0.4)
Flexible	0.5–1.5 (24–16)	10 (0.4)
Flexible with ferrule w/o plastic sleeve	0.5–1.5 (24–16)	10 (0.4)
Flexible with ferrule w plastic sleeve	0.5 (24)	10 (0.4)

Danfoss Drives Oy © 2026.11

Danfoss Drives Oy
Runsorintie 7
FIN-65380 Vaasa
drives.danfoss.com

Any information, including, but not limited to information on selection of product, its application or use, product design, weight, dimensions, capacity or any other technical data in product manuals, catalog descriptions, advertisements, etc. and whether made available in writing, orally, electronically, online or via download, shall be considered informative, and is only binding if and to the extent, explicit reference is made in a quotation or order confirmation. Danfoss cannot accept any responsibility for possible errors in catalogs, brochures, videos and other material. Danfoss reserves the right to alter its products without notice. This also applies to products ordered but not delivered provided that such alterations can be made without changes to form, fit or function of the product. All trademarks in this material are property of Danfoss A/S or Danfoss group companies. Danfoss and the Danfoss logo are trademarks of Danfoss A/S. All rights reserved.

AQ477043679710en-010601
Danfoss Drives Oy © 2026.11

1 7 2 K 2 9 6 5 F