Operating Guide

Safe Torque Off

VLT® Frequency Converters

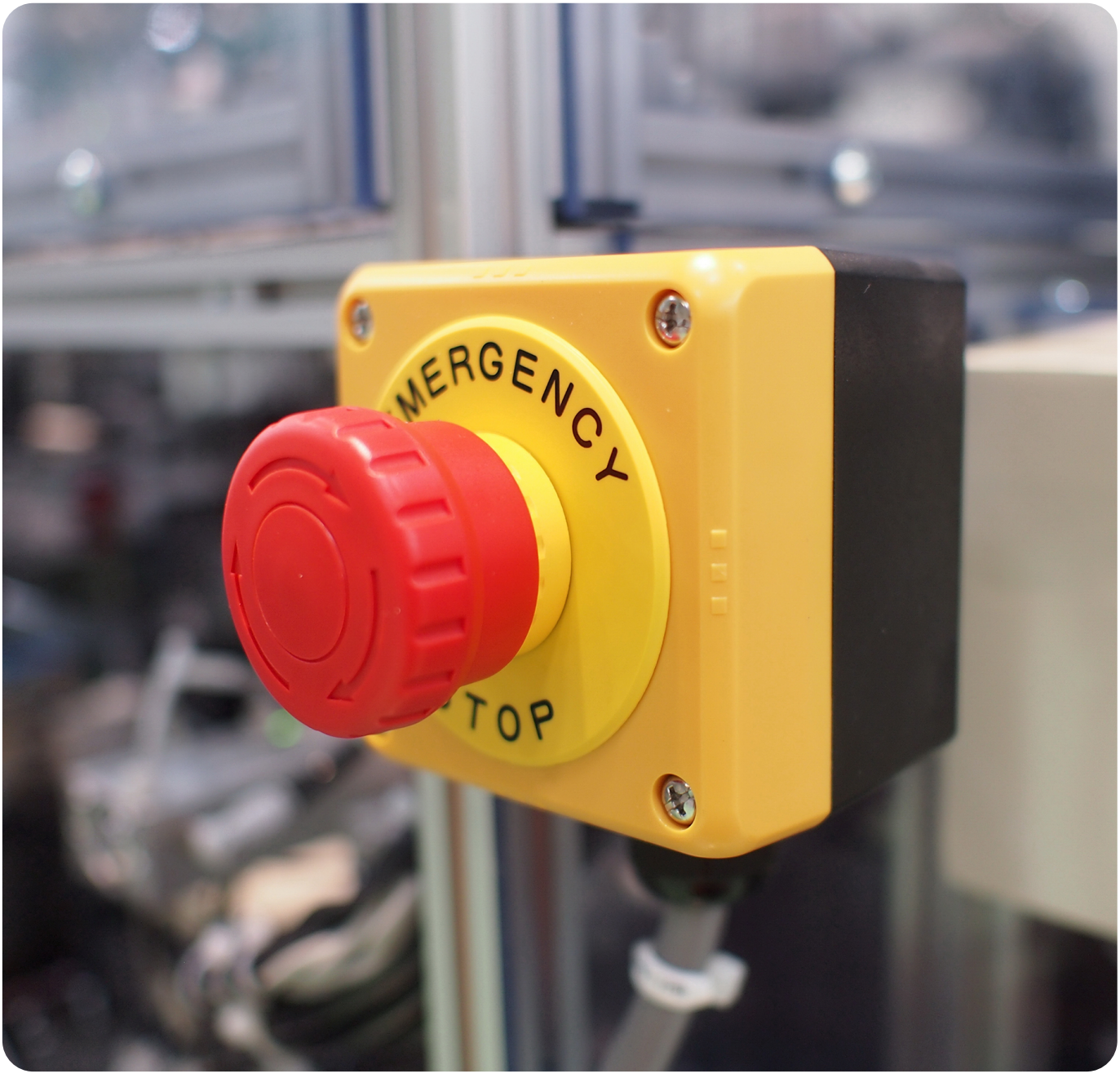

Explore our solutions
drives.danfoss.com

Contents

1 Introduction

1.1 Purpose of the Operating Guide 5
1.2 Additional Resources 5
1.3 Document Version 5
1.4 Functional Overview 5
1.4.1 Introduction 5
1.4.2 Products Covered and Identification 5
1.4.3 Applied Standards and Compliance 6

2 Safety

2.1 Safety Symbols 7
2.2 Qualified Personnel 7
2.3 Safety Precautions 8

3 Installation

3.1 Safety Instructions 10
3.2 Installing STO 10
3.3 Installing STO with VLT® PTC Thermistor Card MCB 112 11

4 Commissioning

4.1 Safety Instructions 13
4.2 Activating STO 13
4.3 Parameter Settings for STO Used with VLT® PTC Thermistor Card MCB 112 13
4.4 Automatic/manual Restart Behavior 13
4.5 STO Commissioning Test 14
4.5.1 Without Automatic Restart After a Safe Stop 14
4.5.2 With Automatic Restart After a Safe Stop 14
4.6 System Configuration Security 15
4.7 Functional Tests 15

5 Application Examples

5.1 SISTEMA Data 16
5.2 Emergency Stop of Drive with STO - Category 1, PL c, SIL 1 16
5.3 Emergency Stop of Drive with STO Using Safety Relay - Category 3, PL d, SIL 2 17

5.4 Emergency Stop of Drive with STO, Safety Relay, and Output Contactor - Category 4, PL e, SIL 3 18

5.5 Emergency Stop of Multiple Drives - Category 3, PL d, SIL 2 19

6 STO Technical Data

6.1 Important Notes Regarding Technical Data 21

6.2 European Regulations and Directives 21

6.3 Safety Standards 21

6.4 Safety Function 21

6.5 Safety Performance 21

7 Appendix

7.1 Abbreviations 23

7.2 Conventions 23

Danfoss A/S © 2026.11

1 Introduction

1.1 Purpose of the Operating Guide

This operating guide provides information for the use of Danfoss VLT® FC Series drives in functional safety applications. The guide includes information about functional safety standards, Danfoss VLT® FC Series Safe Torque Off (STO) function, the related installation and commissioning, and service and maintenance for STO.

The operating guide is intended for use by qualified personnel.

Pay particular attention to the safety instructions and general warnings. Always keep this operating guide available with the product.

1.2 Additional Resources

This guide is targeted at users who are already familiar with the VLT® drives. The guide is intended as a supplement to the guides and instructions available for download at www.danfoss.com. Read the instructions shipped with the drive and/or drive option before installing the unit, and follow the instructions for safe installation.

1.3 Document Version

This guide is regularly reviewed and updated. All suggestions for improvement are welcome.

The original language of this guide is English.

Table 1: Document Version

Edition	Remarks
AQ313340186453, version 15	Updated according to IEC 61800-5-1:2022 ED3.0.

1.4 Functional Overview

1.4.1 Introduction

The Safe Torque Off (STO) function is a component in a safety control system. STO prevents the unit from generating the power required to rotate the motor.

IMPORTANT:

Select and apply the components in the safety control system appropriately to achieve the required level of operational safety. Before integrating and using STO in an installation, carry out a thorough risk analysis on the installation to determine whether the STO functionality and safety levels are appropriate and sufficient.

The VLT® drive is available with Safe Torque Off (STO), as defined by EN IEC 61800-5-2 and Stop category 0, as defined in EN 60204-1.

The drive integrates the STO functionality via control terminal 37.

The VLT® drive with STO functionality is designed and approved for the requirements of the following safety levels and can be used in the application area of En IEC 62061:

- Category 3 in EN ISO 13849-1.
- Performance Level "d" in EN ISO 13849-1.
- SIL 2 in EN IEC 61508 and EN IEC 61800-5-2.

1.4.2 Products Covered and Identification

Confirm that the drive is configured with the STO function by checking the unit type code on the product label.

Table 2: Type Code Identification

Product series available with STO function	Type Code[1]
VLT® HVAC Drive FC 102	T, U, F, or G
VLT® Refrigeration Drive FC 103	T, F, or G
VLT® AQUA Drive FC 202	T, U, F, or G
VLT® AutomationDrive FC 302	X, B, R, or S
VLT® Decentral Drive FCD 302	X or S
VLT® Parallel Drive Modules	T or U

1) STO is identified at position 18 in the type code.

1.4.3 Applied Standards and Compliance

Using the STO on terminal 37 requires that all provisions for safety - including relevant laws, regulations, and guidelines - are fulfilled.

The integrated STO function complies with the following standards:

- IEC/EN 60204-1: 2016 Stop category 9 - uncontrolled stop.
- IEC/EN 61508: 2010 SIL 2.
- IEC/EN 61800-5-2: Edition 2.
- EN ISO 13849-1: 2023 Category 3 PL d.

Danfoss A/S © 2026.11

2 Safety

2.1 Safety Symbols

The following symbols are used in Danfoss documentation and products.

⚠ DANGER

Indicates a hazardous situation which, if not avoided, will result in death or serious injury.

⚠ WARNING

Indicates a hazardous situation which, if not avoided, could result in death or serious injury.

⚠ CAUTION

Indicates a hazardous situation which, if not avoided, could result in minor or moderate injury.

NOTICE

Indicates information considered important, but not hazard-related (for example, messages relating to property damage).

	ISO warning symbol for general warnings
	ISO warning symbol for hot surfaces and burn hazard
	ISO warning symbol for high voltage and electric shock
	Symbol for indicating the required discharge time of the capacitors in the product
	ISO action symbol for referring to the instructions

2.2 Qualified Personnel

To allow trouble-free and safe operation of the unit, only qualified personnel with proven skills are allowed to transport, store, assemble, install, program, commission, maintain, and decommission this equipment.

Persons with proven skills:

- Are qualified electrical engineers, or persons who have received training from qualified electrical engineers and are suitably experienced to operate devices, systems, plants, and machinery in accordance with pertinent laws and regulations.
- Are familiar with the basic regulations concerning health and safety/accident prevention.
- Have read and understood the safety guidelines given in all guides provided with the unit, especially the instructions given in the operating guide.
- Have a good knowledge of the generic and specialist standards applicable to the specific application.

2.3 Safety Precautions

NOTICE

LACK OF SAFETY AWARENESS

This guide provides important information on preventing injury and damage to the equipment or the system. Ignoring this information can lead to death, serious injury, or severe damage to the equipment.

- Make sure to fully understand the dangers and safety measures present in the application.
- Before performing any electrical work on the drive, lock out and tag out all power sources to the drive.

⚠ WARNING

NO ELECTRICAL SAFETY

STO (that is, removing 24 V DC supply voltage to terminal 37) does not provide electrical safety. The STO function itself is not sufficient for implementing the Emergency-Off function as defined by EN IEC 60204-1. Using the STO function to implement Emergency-Off may lead to personal injury.

- Emergency-Off requires measures of electrical isolation, such as switching off mains via an extra contactor.

⚠ WARNING



ELECTRICAL SHOCK AND FIRE HAZARD

The drive can cause a DC current in the ground conductor on a floating/ungrounded power grid when 1 phase becomes grounded. Failure to use a Type B residual-current device (RCD) can result in an electrical shock or fire.

- Use a Type B residual-current device (RCD) on the supply side.

⚠ WARNING

NO ISOLATION OF MAINS VOLTAGE

The STO function does NOT isolate mains voltage to the drive or auxiliary circuits. Only perform work on electrical parts of the drive or the motor after isolating the mains voltage supply and waiting for the discharge time to elapse. Failure to isolate the mains voltage supply from the unit and waiting the time specified could result in death or serious injury.

- Do not stop the drive by using the STO function. If a running drive is stopped by using the function, the unit trips and coasts to a stop. If this limitation is not acceptable, use the appropriate stopping mode to stop the drive and machinery before using the STO function. Depending on the application, a mechanical brake may be required.
- STO does not provide electrical safety.

IMPORTANT:

RESIDUAL ROTATION CONSIDERATION FOR SYNCHRONOUS AND PERMANENT MAGNET MOTORS

Two faults can occur in the power semiconductor of the drive. When using synchronous or permanent magnet motors, a residual rotation can result from the faults. The rotation can be calculated to angle = 360/number of poles. The application using synchronous or permanent magnet motors must consider this residual rotation and ensure that it does not pose a safety risk.

Danfoss A/S © 2026.11

IMPORTANT:

After installing STO, perform a commissioning test. A passed commissioning test is mandatory after the 1st installation and after each change to the safety installation.

IMPORTANT:

Automatic restart behavior is allowed only in 1 of 2 situations:

- The unintended restart prevention is implemented by other parts of the STO installation.
- A presence in the dangerous zone can be physically excluded when STO is not activated. In particular, observe paragraph 6.3.3.2.5 of ISO 12100:2010.

IMPORTANT:

Perform a risk assessment for each stop function to determine the selection of a stop category in accordance with EN 60204-1.

Table 3: Stop Categories and Their Typical Behaviors

Stop category[1]	Type of stop	Motor power during stopping	Motor power after stop	Typical drive implementation[2]	Typical behavior
Category 0	Uncontrolled stop	Removed immediately	Removed	STO	Motor torque is removed immediately, and the motor/load coasts to a stop.
Category 1	Controlled stop	Maintained while decelerating	Removed after stop	SS1⇒STO	The drive performs controlled deceleration, then torque is safely removed.
Category 2	Controlled stop	Maintained	Remains available	Often associated with SS2/SOS concepts, depending on the application.	The drive brings the motor to a controlled stop while actuator power remains available.

1) The category definitions follow EN IEC 60204-1.

2) The mapping of STO to Category 0 and SS1 to Category 1 is derived from the drive safety concepts in EN IEC 61800-5-2.

IMPORTANT:

When designing the machine application, timing and distance must be considered for a coast to stop (Stop Category 0 or STO). For more information regarding stop categories, refer to EN 60204-1.

3 Installation

3.1 Safety Instructions

For important installation safety precautions, refer to the drive-specific operating guide.

⚠ WARNING

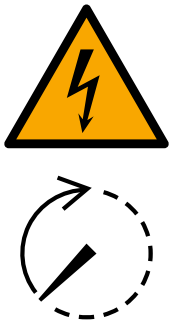

DISCHARGE TIME

The drive contains DC-link capacitors that can remain charged even when the drive is not powered. High voltage can be present even when the warning indicator lights are off.

Failure to wait the specified time after power has been removed before performing service or repair work can result in death or serious injury.

- Stop the motor.
- Disconnect AC mains, permanent magnet type motors, and remote DC-link supplies including battery backups, UPS, and DC-link connections to other drives.
- Wait for the capacitors to discharge fully before performing any service or repair work. The discharge time is specified on the drive product label.
- Before performing any service or repair work, use a measuring device to make sure that capacitors are fully discharged.

3.2 Installing STO

For motor connection, AC mains connection, and control wiring, follow the instructions in the drive-specific installation guide. See 2.3 Safety Precautions and the *Safety* chapter in the installation guide. For installation with EX-certified VLT® PTC Thermistor Card MCB 112, see 3.3 Installing STO with VLT® PTC Thermistor Card MCB 112.

1. Remove the jumper wire between control terminals 37 and 12 or 13.

   Cutting or breaking the jumper is not sufficient to avoid short-circuiting.

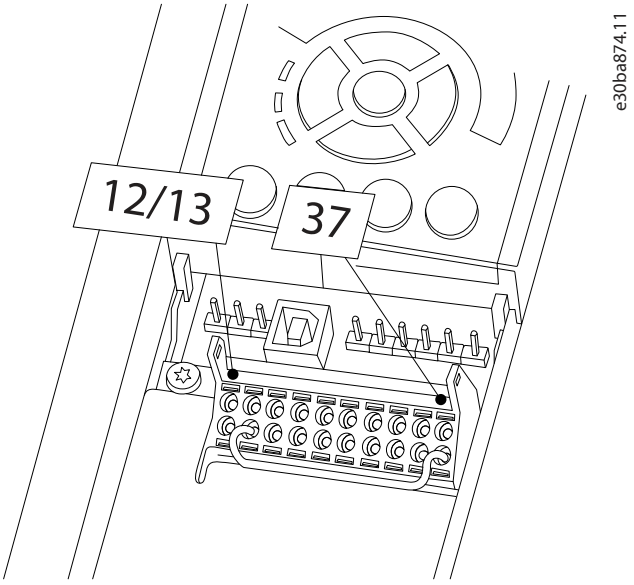

Figure 1: Jumper between Terminals 12/13 and 37 (All Drives Except FCD 302)

Danfoss A/S © 2026.11

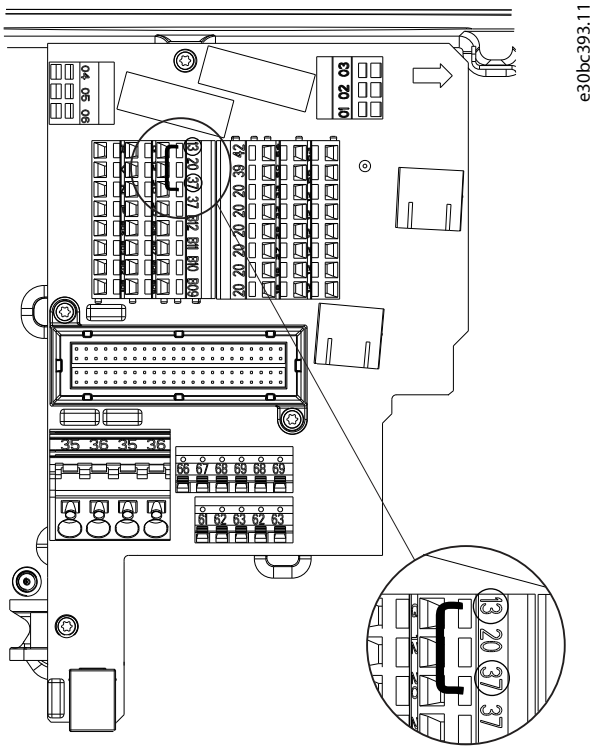

Figure 2: Jumper between Terminals 13 and 37 (FCD 302)

2. For example, connect an external safety monitoring relay via an NO safety function to terminal 37 (STO) and either terminal 12 or 13 (24 V DC).

   See the chapter *Application Examples* for connection and application examples.

3. Finish installing the wiring according to the instructions in the installation guide.

3.3 Installing STO with VLT® PTC Thermistor Card MCB 112

IMPORTANT:

The combination of a VLT® PTC Thermistor Card MCB 112 and the STO function is only available for the following drives:

- VLT® HVAC Drive FC 102
- VLT® Refrigeration Drive FC 103
- VLT® AQUA Drive FC 202
- VLT® AutomationDrive FC 302

The VLT® PTC Thermistor Card MCB 112 uses terminal 37 as its safety-related switch-off channel. Observe the following:

- Ensure that the output X44/12 or MCB 112 is AND-ed with the safety-related sensor, for example, emergency stop button and safe guard switch that activates STO. This method means that the output to STO terminal 37 is high (24 V) only if both the signals from the MCB 112 output X44/12 and from the safety-related sensor are high. If 1 of the 2 signals is low, the output to terminal 37 must be low too.
- Ensure that the safety device with AND-logic complies with the needed safety level.
- Provide short-circuit protection for the connection from the output of the safety device with safe AND-logic to the STO terminal 37.

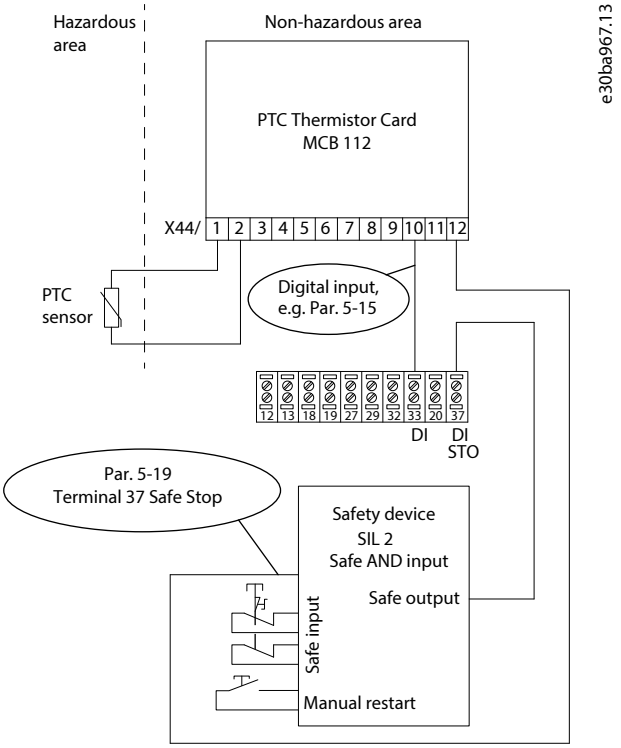

Figure 3: Combination of an STO Application and an MCB 112 Application

Figure 3 shows a restart input for the external safety device. Using this method, parameter ***5-19 Terminal 37 Safe Stop*** can be set to value ***[7] PTC 1 & Relay A/W***. Refer to the *VLT® PTC Thermistor Card MCB 112 Operating Guide* for further details.

Danfoss A/S © 2026.11

4 Commissioning

4.1 Safety Instructions

IMPORTANT:

The operator or electrical installer is responsible for proper grounding and compliance in accordance with all applicable national and local safety regulations.

See 2.3 Safety Precautions and the drive-specific operating guide. Also, always observe the instructions provided by the motor manufacturer.

4.2 Activating STO

The STO function is activated by removing the voltage at terminal 37 of the drive. By connecting the drive to external safety devices providing a safe delay, a Safe Stop 1 installation can be achieved. External safety devices must fulfill Cat./PL or SIL when connected to terminal 37. The STO function can be used for induction, synchronous, and permanent magnet motors.

When the STO function (terminal 37) is activated, the drive issues an alarm, trips the unit, and coasts the motor to a stop. Manual restart is then required. Use the STO function to stop the drive in emergency stop situations. In normal operating mode, when STO is not required, use the standard stop function instead. Before using the automatic restart function, ensure that requirements according to ISO 12100 paragraph 6.3.3.2.5 are fulfilled.

4.3 Parameter Settings for STO Used with VLT® PTC Thermistor Card MCB 112

When the VLT® PTC Thermistor Card MCB 112 is connected, more selections are available for parameter ***5-19 Terminal Safe Stop***(options ***[4] PTC 1 alarm*** to ***[9] PTC 1 & relay W/A***).

- Selections ***[1] Safe stop alarm***and ***[3] Safe stop warning*** are still available, but for installations without MCB 112 or any external safety devices. If ***[1] Safe stop alarm*** or ***[3] Safe stop warning*** are selected and MCB 112 triggered, the drive issues *alarm 72, Dangerous Failure* and coasts the motor safely without automatic restart.
- Do not select ***[4] PTC 1 alarm***and ***[5] PTC 1 warning*** when an external safety device is used. Only use those selections when only MCB 112 uses the STO. If selection ***[4] PTC 1 alarm*** or ***[5] PTC 1 warning*** is selected and the external safety device triggers STO, the drive issues *alarm 72, Dangerous Failure* and coasts the motor safely without automatic restart.
- Select ***[6] PTC 1 & relay A***to ***[9] PTC 1 & relay A/W*** for combining external safety devices and MCB 112.

⚠ CAUTION

AUTOMATIC RESTART

Parameter options ***[7] PTC 1 & Relay W*** or ***[8] PTC 1 & Relay A/W***allow automatic restart when the external safety device is deactivated. Before selecting these options, ensure that:

- The unintended restart prevention is implemented by other parts of the STO installation, or
- A presence in the dangerous zone can be physically excluded when STO is not activated. In particular, paragraph 6.3.3.2.5 of ISO 12100:2010 must be observed.

See the *VLT® PTC Thermistor Card MCB 112 Operating Guide* for further information.

4.4 Automatic/manual Restart Behavior

The STO default state prevents unintended restarts (restart prevention behavior). To terminate STO and resume normal operation, follow these steps.

1. Reapply 24 V DC to terminal 37.

2. Give a reset signal via bus, digital I/O, or [*Reset*] key.

> To set the STO function to automatic restart, set the value of parameter ***5-19 Terminal 37 Safe Stop*** to ***[3] Safe stop warning***. Automatic restart means that STO is terminated and normal operation is resumed when the 24 V DC is applied to terminal 37. No reset signal is required.

4.5 STO Commissioning Test

After installation and before initial use, perform a commissioning test of the installation using STO. Perform the test again after each modification of the installation or application involving the STO.

IMPORTANT:

A successful commissioning test of the STO function is required after the initial installation and after each subsequent change to the installation or application involving the STO.

IMPORTANT:

See the important information note on restart behavior in 2.3 Safety Precautions.

4.5.1 Without Automatic Restart After a Safe Stop

Applications with parameter ***5-19 Terminal 37 Safe Stop*** set to ***[1] Safe stop alarm*** or combined STO and VLT® PTC Thermistor Card MCB 112 with parameter ***5-19 Terminal 37 Safe Stop*** set to ***[6] PTC 1 & relay A*** or ***[9] PTC 1 & relay A/W***.

1. Remove the 24 V DC voltage supply to terminal 37 using the interrupt device while the mains supply is not interrupted and the drive runs the motor.
2. Check that:
   a. The motor coasts.
   b. The mechanical brake activates (if connected).
   c. The LCP (if mounted) shows *Alarm 68, Safe Stop*.
3. Reapply 24 V DC to terminal 37.
4. Ensure that the motor remains in the coasted state, and that the mechanical brake (if connected) remains activated.
5. Send a reset signal via bus, digital I/O, or [*Reset*] key.
6. Ensure that the motor is operational again.

When all the steps are passed successfully, the commissioning test is complete.

4.5.2 With Automatic Restart After a Safe Stop

Applications with parameter ***5-19 Terminal 37 Safe Stop*** set to ***[3] Safe stop warning*** or combined STO and VLT® PTC 1 Thermistor Card MCB 112 with parameter ***5-19 Terminal 5-19 Terminal 37 Safe Stop*** set to ***[7] PTC 1 & relay W*** or ***[8] PTC 1 & Relay A/W***.

1. Remove 24 V DC voltage supply to terminal 37 by the interrupt device while the mains supply is not interrupted and the drive runs the motor.
2. Check that:
   a. The motor coasts.
   b. The mechanical brake activates (if connected).
   c. The LCP (if mounted) shows *warning 68, Safe Stop*.
3. Reapply 24 V DC to terminal 37.

Danfoss A/S © 2026.11

4. Ensure that the motor is operational again.

When all the steps are passed successfully, the commissioning test is complete.

4.6 System Configuration Security

- The user is responsible for implementing appropriate security measures.
- Password protection of the drive parameters is possible.

4.7 Functional Tests

For PL d or SIL 2, a functional test is required every 12 months to detect any failure or malfunction of the STO functionality. For lower safety levels, periodic functional tests are recommended. If faults detected during testing prevent steps 3–5 and 7 from being verified, observe the following:

- Operation is not allowed with a faulty unit. Immediately initiate STO.
- Replace the faulty unit and run a successful commissioning test before resuming normal operation. Repair is not allowed.
- If a failure is found during testing, the drive must switch to torque-free motor operation, which is considered a safe state. Since the drive can no longer guarantee a safe state, the test itself must be conducted in a way that secures a safe state, such as via a safety PLC.
  1. Remove 24 V DC voltage supply at terminal 37.
  2. Check if the LCP shows *alarm 68, Safe Stop* or *warning 68, Safe Stop*.
  3. Verify that the drive trips the unit.
  4. Verify that the motor is coasting and comes to a complete stop.
  5. Verify that the motor cannot be started.
  6. Reconnect 24 V DC supply to terminal 37.
  7. If parameter ***5-19 Terminal 37 Safe Stop*** is set to ***[1] Safe stop alarm***, verify that the motor is not started automatically and restarts only at a reset signal via bus, digital I/O, or [*Reset*] key.

5 Application Examples

5.1 SISTEMA Data

SISTEMA (Safety Integrity Software Tool for the Evaluation of Machine Applications) is a software utility that provides developers and testers of safety-related machine controls with comprehensive support while evaluating safety in the context of ISO 13849-1.

Functional safety data are available from a data library for use with the SISTEMA calculation tool from the ISA (Institute for Occupational Safety and Health of the German Social Accident Insurance), and data for manual calculation. SISTEMA is available for download at www.danfoss.com in the *Service and support/downloads* sections.

5.2 Emergency Stop of Drive with STO - Category 1, PL c, SIL 1

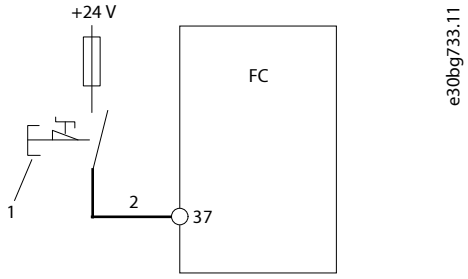

Figure 4: Application Example, Emergency Stop with STO, Category 1, PL c, SIL1

1	Emergency stop button	2	Short-circuit protected cable (if not in an installation IP54 enclosure). See ISO 13849-2, Table D.4 for futher information).

Safety function

If there is an emergency, the emergency stop device is triggered and activates the STO function of the drive. Following a stop or emergency stop command, the drive is halted.

Design features

- The circuit can be used up to Category 1, PL c (ISO 13849-1) or SIL 1 (EN 62061 and IEC 61508).
- The STO function is activated via 1 NC positively operated switch contact (according to IEC 60947-5-1, IEC 60947-5-1, and IEC 60947-5-5).
- Uses basic safety principles.

When implementing the emergency stop, pay attention to the following tips:

- Any non-safety-related standards should be fulfilled for the application and its components.
- The application designer is responsible for selecting suitable components.
- Devices used for activation of STO must be suitable for the selected Category, PL, or SIL,
- To fulfill PL c, calculate the MTTFd and DC for the whole safety function.
- The B_{10d} value of the emergency stop device has to be known. The B_{10d} value has to be high enough to fulfill MTTFd corresponding to PL c.

Implementation in SISTEMA using Danfoss VLT library

As an example, use the subsystem "VLT® AutomationDrive FC 302/FCD 302 Safe Torque Off (Terminal 37)". There is no need to edit all the parameters which are set in the library.

Danfoss A/S © 2026.11

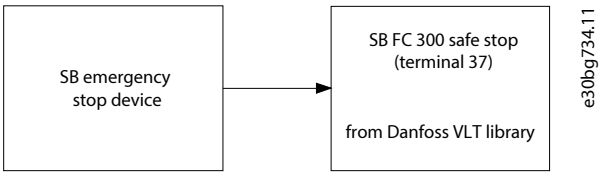

Figure 5: Safety-related Block Diagram

5.3 Emergency Stop of Drive with STO Using Safety Relay - Category 3, PL d, SIL 2

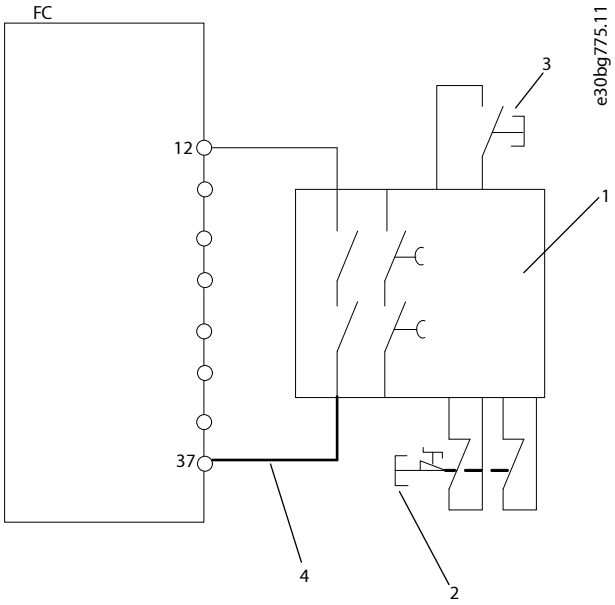

Figure 6: Installation Example Achieving a Stop Category 0 (EN 60204-1) with Safety Cat. 3/PL "d" (ISO 13849-1) or SIL 2 (EN 62061 and IEC 61508)

1	Safety relay (Category 3, PL d, SIL 2)	2	Emergency stop button
3	Reset button	4	Short-circuited protected cable (if not installed in an installation IP54 enclosure). See ISO 13849-2, Table D.4 for further information.

Safety function

If there is an emergency, the emergency stop button device is triggered and activates the STO function of the drive. Following a stop or emergency stop command, the drive is halted.

Design features

- The circuit can be used up to Category 3, PL d (ISO 13849-1) or SIL 2 (EN 62061 and IEC61508).
- Uses basic safety principles.

When implementing the emergency stop, pay attention to the following tips:

- Any non-safety-related standards should be fulfilled for the application and its components.
- The application designer is responsible for selecting suitable components.
- The device used for activation of STO and safety relay must be suitable for the selected category PL and SIL.
- The cable shown in bold in Figure 6 has to be short-circuit protected according to ISO 13849-2 table D.4.
- To fulfill PL d, calculate the MTTFd and DC for the whole safety function.

This setup can be used if a dual positive-switching device is used. Depending on the safety relay, it is also possible to connect several activation devices to 1 STO.

Implementation of SISTEMA using Danfoss VLT library

As an example, use the subsystem "VLT® AutomationDrive FC 302/FCD 302 Safe Torque Off (Terminal 37)". There is no need for editing all the parameters which are set in the library.

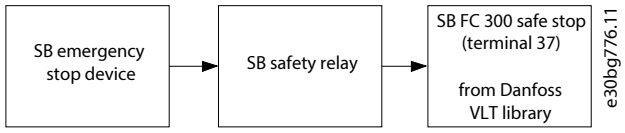

Figure 7: Safety-related Block Diagram

5.4 Emergency Stop of Drive with STO, Safety Relay, and Output Contactor - Category 4, PL e, SIL 3

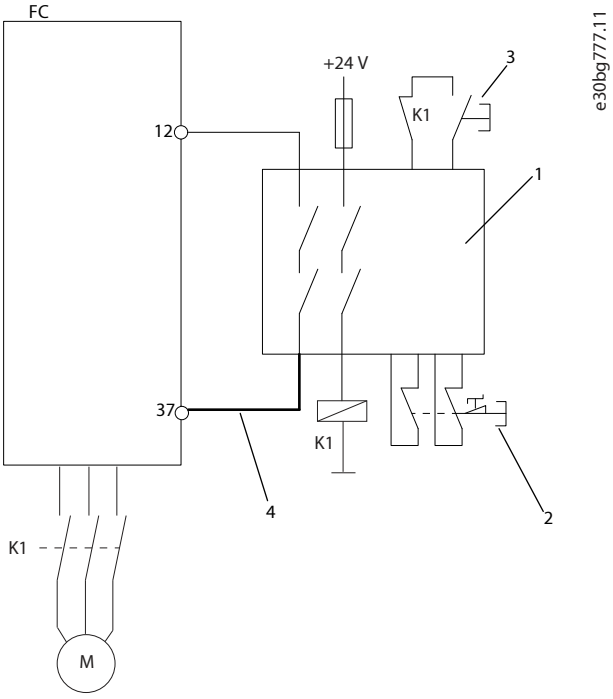

Figure 8: Drive with STO, Safety Relay, and Output Contactor (Category 4, PL e, SIL 3)

1	Safety relay (Category 4, PL e, SIL 3)	2	Emergency stop button
3	Reset button	4	Short-circuit protected cable (if not installed in an IP54 enclosure). See ISO 13849-2, Table D.4 for further information.

Safety function

If there is an emergency, the emergency stop device is triggered and activates the STO function of the drive. Following a stop or emergency stop command, the drive is halted.

For the safety control system to comply with PL e ISO 13849-1 or SIL 3 (EN 62061 and IEC 61508), a 2-channel stop for the STO function is required. One channel can be implemented by the STO input on the drive and the other by a contactor, which may be connected in the drive input or output power circuits. The contactor must be monitored through an auxiliary-guided contact, shown as K1 in Figure 8.

Danfoss A/S © 2026.11

Design features

- The circuit can be used up to Category 4 and PL e.
- Uses basic safety principles.

When implementing the emergency stop, pay attention to the following tips:

- Any non-safety-related standards should be fulfilled for the application and its components.
- The application designer is responsible for selecting suitable components.
- Device used for activation of STO and safety relay must be suitable for the selected category, PL, or SIL.
- The cable shown in bold in Figure 8 has to be short-circuit protected according to ISO 13849-2, Table D.4.
- To fulfill PL e, calculate the MTTFd and DC for the entire safety function.

This setup can be used if a dual positive-switching device is used.

Implementation in SISTEMA using Danfoss VLT library

As an example, use the block "VLT® AutomationDrive FC 302/FCD 302 (Terminal 37)". There is no need for editing all the parameters which are set in the library.

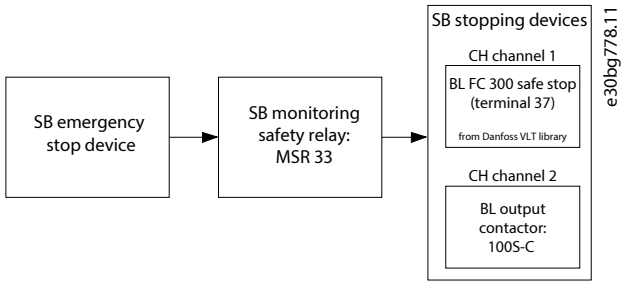

Figure 9: Safety-related Block Diagram

5.5 Emergency Stop of Multiple Drives - Category 3, PL d, SIL 2

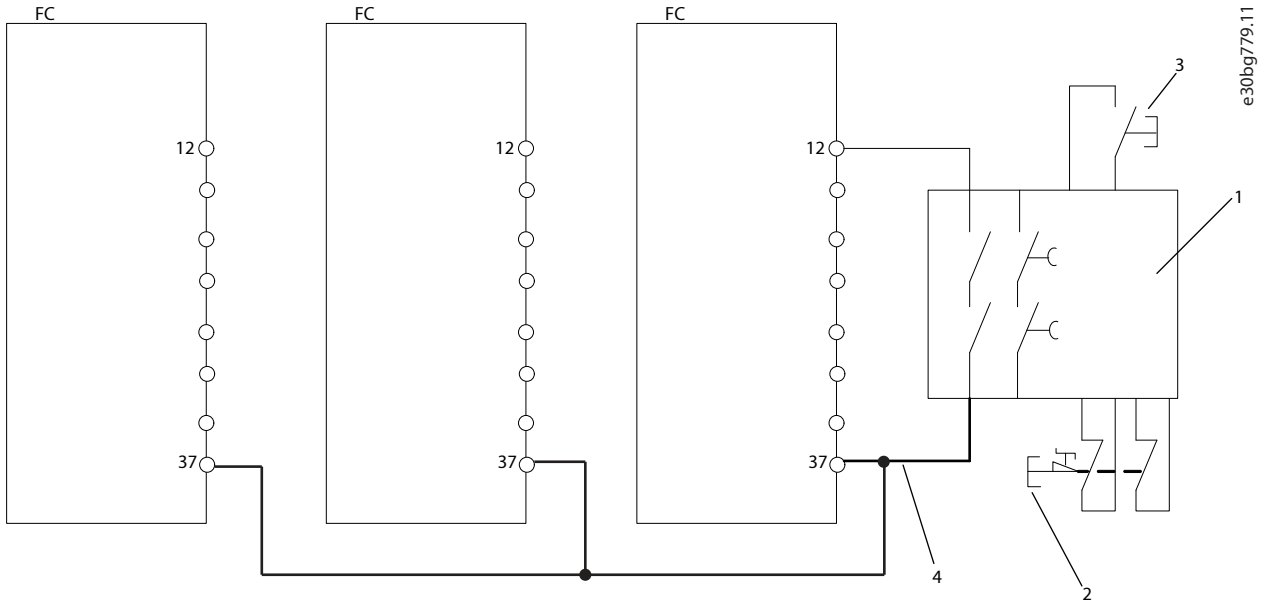

Figure 10: Multiple Drives with Category 3, PL d, SIL 2

1	Safety relay (Category 3, PL d, or SIL 2)	2	Emergency stop button
3	Reset button	4	Short-circuit protected cable (if not inside an installation IP54 enclosure). See ISO 13849-2, Table D.4 for further information.

Safety function

If there is an emergency, the emergency stop device is triggered and activates the STO function of the drive. Following a stop or an emergency stop command, the drive is halted.

If it is required to control multiple drives from the same control line, the STO inputs may be interconnected directly.

Connecting inputs increases the risk of a fault in the unsafe direction since a fault in 1 drive may result in all drives becoming enabled. However, the risk of a fault is so low, at 1 x 10^{-10} per hour, that the resulting risk still meets the requirement for SIL 2 for a realistic number of drives. Do no connect more than 20 inputs in parallel.

> IMPORTANT:
>
> When using internal 24 V DC supply (terminal 12), the number of parallel inputs (terminal 37) is limited to 3, otherwise the available output power is exceeded.

Design features

- The circuit can be used up to Category 3, PL d, or SIL 2.
- Uses basic safety principles.

When implementing the emergency stop, pay attention to the following tips:

- Any non-safety-related standards should be fulfilled for the application and its components.
- The application designer is responsible for selecting suitable components.
- The device used for activation of STO and safety relay must be suitable for the selected category, PL or SIL.
- The cable shown in bold in Figure 10 has to be short-circuit protected according to ISO 13849-2, Table D.4.
- To fulfill PL d, calculate the MTTFd and DC for the entire safety function.

This setup can be used if a dual positive-switching device is used. Depending on the safety relay, it is also possible to connect several activation devices to 1 STO.

Implementation in SISTEMA using Danfoss VLT library

As an example, use the subsystem "VLT® AutomationDrive FC 302/FCD 302 Safe Torque Off (Terminal 37)". There is no need for editing all the parameters which are set in the library. Put the subsystem into the safety function as often as the number of drives that are present on the single STO line.

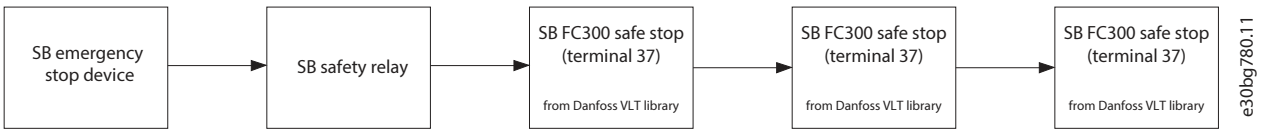

Figure 11: Safety-related Block Diagram

Danfoss A/S © 2026.11

6 STO Technical Data

6.1 Important Notes Regarding Technical Data

IMPORTANT:

For technical specifications and operating conditions for the drive, refer to the drive-related operating guide.

IMPORTANT:

The STO signal and cabling must be SELV or PELV supplied.

6.2 European Regulations and Directives

For information about the European regulations and directives, refer to the EU declaration in the drive-specific installation guide or to www.danfoss.com.

6.3 Safety Standards

Safety of Machinery	EN ISO 13849-1, IEC 60204-1
Functional Safety	IEC 61508-1 to IEC 61508-7, IEC 61800-5-2

6.4 Safety Function

Safe Torque Off (STO)	IEC 61800-5-2
Stop Category 0	IEC 60204-1

6.5 Safety Performance

ISO 13849-1	
Category	3
Diagnostic coverage	90% (medium)
Mean time to dangerous failure	100 years (high)
Performance level	PL d
IEC 61508	
Safety integrity level	SIL 2
Probability of dangerous failure per hour	1E-10/h; 1E-8/h for specific variants (high-demand mode)[(1)(2)]
Probability of dangerous failure on demand	1E-10; 1E-4 for specific variants (low-demand mode)[(1)(2)]
Subsystem classification	Type A
Proof test interval T1	20 years
Mission time TM	20 years
Reaction time	

Input to output response time	Maximum 20 ms, 60 ms for specific variants[1][2]

1) VLT® HVAC Drive FC 102, VLT® Refrigeration Drive FC 103, VLT® AQUA Drive FC 202, and VLT® AutomationDrive FC 302 high-power drives, enclosure size F:

- 400 V: 450/500 kW (600/650 hp)–800/1000 kW (1075/1350 hp) (high overload/normal overload).
- 690 V: 630/710 kW (850/950 hp)–1800/2000 kW (2400/2700 hp) (high overload/normal overload).

2) VLT® Parallel Drive Modules:

- 400 V: 250/315 kW (350/450 hp)–800/1000 kW (1200/1350 hp) (high overload/normal overload).
- 690 V: 315/450 kW (350/600 hp)–1000/1200 kW (1150/1350 hp) (high overload/normal overload).

Danfoss A/S © 2026.11

7 Appendix

7.1 Abbreviations

Table 4: Functional Safety Abbreviations

Abbreviations	Reference	Description
B_{10d}	–	Number of cycles until 10% of the components experience a dangerous failure (for pneumatic and electromechanical components).
Cat.	EN ISO 13849-1	Category, level "B, 1–4".
CCF	–	Common-cause failure.
DC	–	Diagnostic coverage divided into low, medium, and high.
FIT	–	Failure in time: 1E-9/hour.
MTTFd	EN ISO 13849-1	Mean time to failure - dangerous. Unit: Years are divided into low, medium, and high.
PFH	EN IEC 61508	Probability of dangerous failure per hour. Consider this value for high-demand or continuous operation where the safety-related system experiences more than 1 demand per year.
PFD	EN IEC 61508	Average probability of failure on demand. This value is used for low-demand operation.
PL	EN ISO 13849-1	Discrete level used to specify the ability of safety-related parts of control systems to perform a safety function under foreseeable conditions. Levels divided into a through e.
PLr	–	Required performance level for a particular safety function.
SIL	EN IEC 61508	Safety integrity level.
STO	EN IEC 61800-5-2	Safe Torque Off.
SS1	EN IEC 61800-5-2	Safe Stop 1.
SRECS	EN IEC 62061	Safety-related electrical control system.
SRP/CS	EN ISO 13849-1	Safety-related part of control systems.
PDS/SR	EN IEC 61800-5-2	Power drive system (safety related).

7.2 Conventions

- Numbered lists indicate procedures that are to be followed sequentially.
- Bulleted and dashed lists indicate listings of other information where the order of the information is not relevant.
- Bolded text indicates important information and section headings.
- Italicized text indicates the following:
  - Cross-reference.
  - Link.
  - Footnote.
  - Alarms/warnings.
- Bolded and italicized text indicates the following:
  - Parameter name.
  - Parameter option.
  - Parameter group name.
- All measurements and weights are shown first in metric, followed by imperial in brackets.
- An asterisk (*) indicates the default setting of a parameter.

Danfoss A/S © 2026.11

Danfoss A/S
Ulsnaes 1
DK-6300 Graasten
drives.danfoss.com

Any information, including, but not limited to information on selection of product, its application or use, product design, weight, dimensions, capacity or any other technical data in product manuals, catalog descriptions, advertisements, etc. and whether made available in writing, orally, electronically, online or via download, shall be considered informative, and is only binding if and to the extent, explicit reference is made in a quotation or order confirmation. Danfoss cannot accept any responsibility for possible errors in catalogs, brochures, videos and other material. Danfoss reserves the right to alter its products without notice. This also applies to products ordered but not delivered provided that such alterations can be made without changes to form, fit or function of the product. All trademarks in this material are property of Danfoss A/S or Danfoss group companies. Danfoss and the Danfoss logo are trademarks of Danfoss A/S. All rights reserved.

M00265
AQ313340186453en-011501
Danfoss A/S © 2026.11

130R0544