ENGINEERING
TOMORROW

Application guidelines

Danfoss Scroll for Refrigeration
MLM / MLZ

50-60Hz - R404A - R507 - R134a - R22 - R407A - R407F



http://cc.danfoss.com

Features 4

Scroll compression principle 5
The scroll compression process 5

Compressor model designation 6
Nomenclature 6
Label 6

Technical specifications 7
50 Hz 7
60 Hz 9
R404A / R507 11
R22 12
R134a 13
R407A 14
R407F 15

Dimensions 16
MLZ/MLM015-019-021-026 16
MLZ/MLM030-038-042-045-048 17
MLZ/MLM058-066-076 18
Oil sight glass 19
Schrader 19
Suction and discharge connections 19

Electrical data, connections and wiring 20
Motor voltage 20
Wiring connections 20
IP rating 20
Three phase electrical characteristics 21
Single phase electrical characteristics 21
LRA (Locked Rotor Amp) 22
MCC (Maximum Continuous Current) 22
Max Oper. A (Maximum Operating Amp) 22
Winding resistance 22
Electrical connections 22
Nominal capacitor value and relays 23
Three phase 24
Internal motor protection 24
Phase sequence and reverse rotation protection 24
Voltage imbalance 24

Approvals and certifications 25
Approvals and certificates 25
Conformity to directives 25
Internal free volume 25

Operating conditions 26
Refrigerant and lubricants 26
Motor supply 28
Compressor ambient temperature 28
Application envelope 28
Maximum discharge gas temperature 32
High and low pressure protection 33
On/off cycling (cycle rate limit) 33

System design recommendations 34
General 34
Essential piping design considerations 34
Refrigerant charge limit 35
Off-cycle migration 35
Liquid flood back 37

Specific application recommendations 38
Low ambient application 38
Scroll and reciprocating 38
Low load operations 39
Brazed plate heat exchangers 39
Water utilising systems 39

Sound and vibration management 40
Starting sound level 40
Running sound level 40
Stopping sound level 40
Sound generation in a refrigeration system 40
Compressor sound radiation 40
Mechanical vibrations 41
Gas pulsation 41

Installation 42
System cleanliness 42
Compressor handling and storage 42
Compressor mounting 42
Compressor holding charge 42
Tube brazing procedure 42
Brazing material 42
Vacuum evacuation and moisture removal 44
Liquid line filter driers 44
Refrigerant charging 44
Insulation resistance and dielectric strength 44

Ordering information and packaging.. 45
Packaging 45
Packaging details 45
Single pack 46
Industrial pack 47

Spare parts & accessories 48

With its unique scroll design and manufacturing process flexibility, the new Danfoss MLZ/ MLM refrigeration compressor offers a highly efficient solution for demanding refrigeration applications.

This new family of refrigeration compressors includes 12 sizes of medium temperature scroll compressors designed for commercial refrigeration applications. These compressors are engineered for refrigeration, and offer cooling capacity from 3.4 to 21 kW (2 to 10 HP) at common voltages and frequencies as well as any of the common refrigerants (R404A - R134a - R507 - R22 - R407A - R407F) (Only motor code4.code5 of MLZ are qualified with R407A/ R407F). MLZ are only qualified with the above 6 refrigerants, MLM is to be used only with R22. Be sure you have selected a qualified refrigerant for this range of compressors.

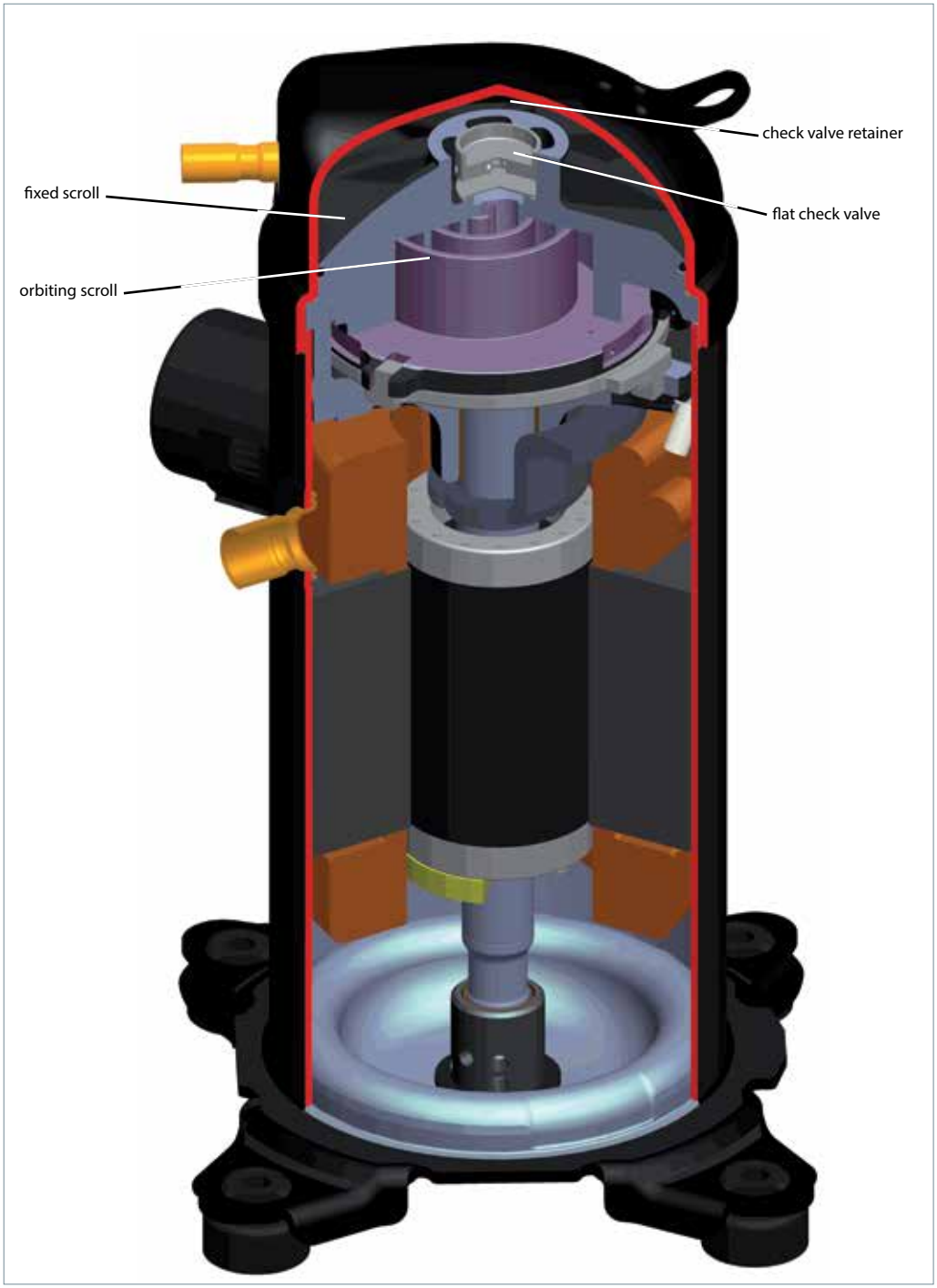

Thanks to its dedicated refrigeration design, the MLZ/MLM scroll compressor delivers a number of powerful advantages. With its high efficiency motor and optimised scroll design it reduces energy cost in normal operating conditions and delivers high capacity and an optimised pressure ratio for refrigeration applications.

The scroll compression process

The entire scroll compression process is illustrated below. The centre of the orbiting scroll traces a circular path around the centre of the fixed scroll. This movement creates compression pockets between the two scroll elements.

Low pressure suction gas is trapped within each crescent-shaped pocket as it forms; continuous motion of the orbiting scroll serves to seal the pocket, which decreases in volume as the pocket moves towards the centre of the scroll set, with corresponding increase in gas pressure. Maximum compression is achieved, as the pocket reaches the discharge port at the centre.

Scroll compression is a continuous process: when one pocket of gas is being compressed during the second orbit, another gas quantity enters a new pocket formed at the periphery, and simultaneously, another is being discharged.

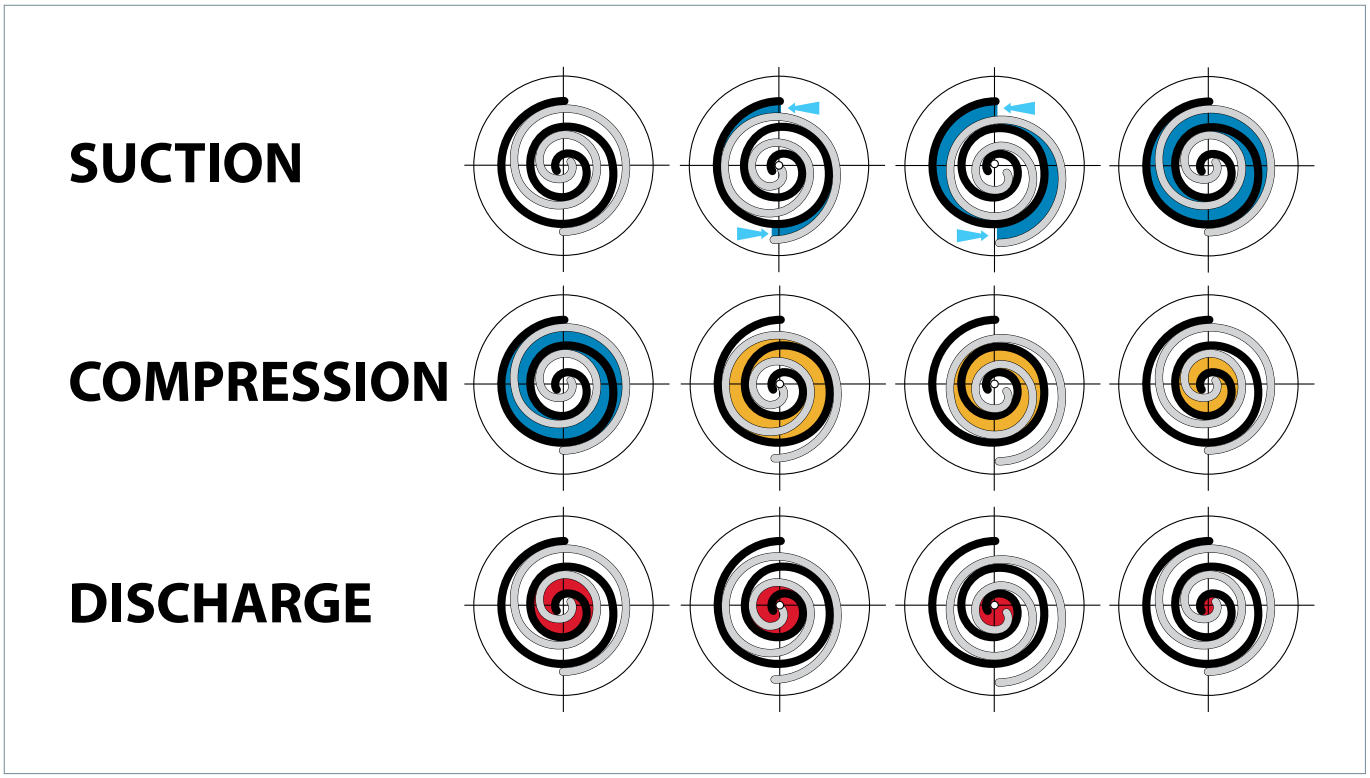

Danfoss scroll compressors are manufactured using the most advanced machining, assembly, and process control techniques. In design of both the compressor and the factory, very high standards of reliability and process control were first priority. The result is a highly efficient product with the highest reliability obtainable, and a low sound level.

Nomenclature

Type	Size	Motor	Features
M LZ	021	T 4 L	P 9

Application
M: medium temperature refrigeration

Family, Refrigerant & lubricant
LZ: R404A - R507 - R134a - R22 - R407A - R407F, PVE lubricant
LM: R22, alkylbenzene lubricant

Nominal capacity
In thousand Btu/h at 60 Hz, ARI, MBP conditions

Model variation
T: design optimised for refrigeration

Other features

	Oil sight glass	Oil equalisation	Oil drain	LP gauge port	Gas equalisation port
9	Threaded	None	Schrader	None	None

Tubing and electrical connections
P: brazed connections, spade terminals
C: brazed connections, screw terminals
T: rotolock connections, spade terminals
Q: rotolock connections, screws terminals


Spade terminals


Screw terminals

Motor protection
L: internal motor protection

Motor voltage code
1: 208-230V/1~/60 Hz
2: 200-220V/3~/50 Hz & 208-230V/3~/60 Hz
4: 380-415V/3~/50 Hz & 460V/3~/60 Hz
5: 220-240V/1~/50 Hz
7: 575V/ 3~/60 Hz
9: 380V/3~/60 Hz

Label



50 Hz

	Model	HP	Nominal cooling capacity *		Power input *	Efficiency *		Swept volume	Displacement	Oil charge	Net weight (with oil)
						COP	EER				
			W	Btu/h	kW	W/W	Btu/h/W	cm3/rev	m3/h	Litres	kg
R404A **	MLZ015	2	3300	11263	1.75	1.89	6.45	33.77	5.88	1.06	30.84
	MLZ019	2.5	4500	15358	2.16	2.06	7.03	43.51	7.57	1.06	30.84
	MLZ021	3	4700	16041	2.27	2.08	7.10	46.21	8.04	1.06	30.84
	MLZ026	3.5	5800	19795	2.90	2	6.83	57.11	9.94	1.06	30.84
	MLZ030	4	7100	24232	3.35	2.11	7.20	68.79	11.97	1.57	37.2
	MLZ038	5	8400	28669	3.86	2.19	7.47	80.95	14.09	1.57	37.2
	MLZ042	5.5	9500	32423	4.72	2.02	6.89	93.09	16.20	1.57	37.2
	MLZ045	6	10200	34812	4.89	2.09	7.13	98.57	17.15	1.57	37.2
	MLZ048	7	11200	38225	5.38	2.09	7.13	107.48	18.70	1.57	37.2
	MLZ058	7.5	13000	44369	6.08	2.13	7.27	125.95	21.92	2.66	44
	MLZ066	9	15100	51536	7.01	2.15	7.34	148.8	25.89	2.66	45.18
	MLZ076	10	17300	59044	7.93	2.18	7.44	162.43	28.26	2.66	45.18
R134a ***	MLZ015	2	2000	6826	1.02	1.94	6.62	33.77	5.88	1.06	30.84
	MLZ019	2.5	2500	8532	1.28	1.98	6.76	43.51	7.57	1.06	30.84
	MLZ021	3	2700	9215	1.33	2.04	6.96	46.21	8.04	1.06	30.84
	MLZ026	3.5	3300	11263	1.62	2.05	7.00	57.11	9.94	1.06	30.84
	MLZ030	4	4000	13652	1.93	2.09	7.13	68.79	11.97	1.57	37.2
	MLZ038	5	4700	16041	2.34	2.02	6.89	80.95	14.09	1.57	37.2
	MLZ042	5.5	5300	18089	2.74	1.95	6.66	93.09	16.20	1.57	37.2
	MLZ045	6	5800	19795	2.69	2.17	7.41	98.57	17.15	1.57	37.2
	MLZ048	7	6200	21160	2.91	2.13	7.27	107.48	18.70	1.57	37.2
	MLZ058	7.5	7400	25256	3.61	2.05	7.00	125.95	21.92	2.66	44
	MLZ066	9	8600	29352	4.10	2.1	7.17	148.8	25.89	2.66	45.18
	MLZ076	10	9600	32765	4.67	2.05	7.00	162.43	28.26	2.66	45.18
R22	MLZ/MLM015	2	3300	11263	1.53	2.15	7.34	33.77	5.88	1.06	30.84
	MLZ/MLM019	2.5	4300	14676	1.87	2.3	7.85	43.51	7.57	1.06	30.84
	MLZ/MLM021	3	4600	15700	2.02	2.27	7.75	46.21	8.04	1.06	30.84
	MLZ/MLM026	3.5	5700	19454	2.43	2.33	7.95	57.11	9.94	1.06	30.84
	MLZ/MLM030	4	6800	23208	2.93	2.33	7.95	68.79	11.97	1.57	37.2
	MLZ/MLM038	5	8100	27645	3.45	2.34	7.99	80.95	14.09	1.57	37.2
	MLZ/MLM042	5.5	9100	31058	4.23	2.15	7.34	93.09	16.20	1.57	37.2
	MLZ/MLM045	6	9300	31741	4.14	2.24	7.65	98.57	17.15	1.57	37.2
	MLZ/MLM048	7	10600	36177	4.53	2.33	7.95	107.48	18.70	1.57	37.2
	MLZ/MLM058	7.5	12300	41980	5.29	2.33	7.95	125.95	21.92	2.66	44
	MLZ/MLM066	9	14100	48123	5.94	2.38	8.12	148.8	25.89	2.66	45.18
	MLZ/MLM076	10	16600	56655	6.96	2.38	8.12	162.43	28.26	2.66	45.18

* at EN12900 conditions: To= -10°C, Tc= 45°C, RGT= 20°C, SC= 0K
** R507 performance data are nearly identical to R404A performance data
***: To= -10°C, Tc= 45°C, SH=10K, SC= 0K
Motor voltage code 4: 400V/3~/50 Hz & 460V/3~/60 Hz
MLZ/MLM042: motor voltage code 5: 220-240V/1~/50 Hz

50 Hz

	Model	HP	Nominal cooling capacity *		Power input *	Efficiency *		Swept volume	Displacement	Oil charge	Net weight (with oil)
						COP	EER				
			W	Btu/h	kW	W/W	Btu/h/W	cm3/rev	m3/h	Litres	kg
R407A	MLZ015	2	3100	10580	1.55	2	6.83	33.77	5.88	1.06	30.84
	MLZ019	2.5	4000	13652	2.04	1.96	6.69	43.51	7.57	1.06	30.84
	MLZ021	3	4200	14334	2.21	1.91	6.52	46.21	8.04	1.06	30.84
	MLZ026	3.5	5300	18089	2.71	1.96	6.69	57.11	9.94	1.06	30.84
	MLZ030	4	6500	22184	2.99	2.17	7.41	68.79	11.97	1.57	37.2
	MLZ038	5	7500	25597	3.47	2.16	7.37	80.95	14.09	1.57	37.2
	MLZ042	5.5	8600	29352	4.53	1.9	6.48	93.09	16.20	1.57	37.2
	MLZ045	6	9100	31058	4.55	2.01	6.86	98.57	17.15	1.57	37.2
	MLZ048	7	10000	34130	5.01	2	6.83	107.48	18.70	1.57	37.2
	MLZ058	7.5	11500	39249	5.69	2.02	6.89	125.95	21.92	2.66	44
	MLZ066	9	13400	45734	6.78	1.98	6.76	148.8	25.89	2.66	45.18
	MLZ076	10	14700	50171	7.51	1.96	6.69	162.43	28.26	2.66	45.18
R407F	MLZ015	2	3300	11263	1.66	2	6.83	33.77	5.88	1.06	30.84
	MLZ019	2.5	4300	14676	2.19	1.96	6.69	43.51	7.57	1.06	30.84
	MLZ021	3	4500	15358	2.37	1.91	6.52	46.21	8.04	1.06	30.84
	MLZ026	3.5	5700	19454	2.90	1.96	6.69	57.11	9.94	1.06	30.84
	MLZ030	4	6900	23549	3.20	2.17	7.41	68.79	11.97	1.57	37.2
	MLZ038	5	8000	27304	3.72	2.16	7.37	80.95	14.09	1.57	37.2
	MLZ042	5.5	9200	31399	4.85	1.9	6.48	93.09	16.20	1.57	37.2
	MLZ045	6	9800	33447	4.87	2.01	6.86	98.57	17.15	1.57	37.2
	MLZ048	7	10800	36860	5.37	2.01	6.86	107.48	18.70	1.57	37.2
	MLZ058	7.5	12300	41980	6.09	2.02	6.89	125.95	21.92	2.66	44
	MLZ066	9	14400	49147	7.26	1.99	6.79	148.8	25.89	2.66	45.18
	MLZ076	10	15800	53925	8.04	1.96	6.69	162.43	28.26	2.66	45.18

* at EN12900 conditions: To= -10°C, Tc= 45°C, RGT= 20°C, SC= 0K
** R507 performance data are nearly identical to R404A performance data
Motor voltage code 4: 400V/3~/50 Hz & 460V/3~/60 Hz
MLZ/MLM042: motor voltage code 5: 220-240V/1~/50 Hz
Only motor code4.code5 of MLZ are qualified with R407A/R407F

60 Hz

	Model	HP	Nominal cooling capacity *		Power input *	Efficiency *		Swept volume	Displacement	Oil charge	Net weight (with oil)
						COP	EER				
			W	Btu/h	kW	W/W	Btu/h/W	cm3/rev	m3/h	Litres	kg
R404A **	MLZ015	2	4100	13993	2.10	1.94	6.62	33.77	7.09	1.06	30.84
	MLZ019	2.5	5500	18771	2.58	2.11	7.20	43.51	9.14	1.06	30.84
	MLZ021	3	5800	19795	2.74	2.13	7.27	46.21	9.70	1.06	30.84
	MLZ026	3.5	7200	24573	3.44	2.1	7.17	57.11	11.99	1.06	30.84
	MLZ030	4	8500	29010	3.90	2.18	7.44	68.79	14.45	1.57	37.2
	MLZ038	5	10200	34812	4.70	2.18	7.44	80.95	17.00	1.57	37.2
	MLZ042	5.5	11800	40273	5.73	2.07	7.06	93.09	19.55	1.57	37.2
	MLZ045	6	12400	42321	5.64	2.19	7.47	98.57	20.70	1.57	37.2
	MLZ048	7	13500	46075	6.15	2.2	7.51	107.48	22.57	1.57	37.2
	MLZ058	7.5	15700	53584	7.35	2.14	7.30	125.95	26.45	2.66	44
	MLZ066	9	18400	62799	8.40	2.18	7.44	148.8	31.25	2.66	45.18
	MLZ076	10	20900	71331	9.59	2.18	7.44	162.43	34.11	2.66	45.18
R134a ***	MLZ015	2	2400	8191	1.19	2.04	6.96	33.77	7.09	1.06	30.84
	MLZ019	2.5	3100	10580	1.53	2.03	6.93	43.51	9.14	1.06	30.84
	MLZ021	3	3300	11263	1.58	2.1	7.17	46.21	9.70	1.06	30.84
	MLZ026	3.5	4100	13993	1.91	2.14	7.30	57.11	11.99	1.06	30.84
	MLZ030	4	4900	16724	2.35	2.1	7.17	68.79	14.45	1.57	37.2
	MLZ038	5	5800	19795	2.80	2.08	7.10	80.95	17.00	1.57	37.2
	MLZ042	5.5	6500	22184	3.33	1.94	6.62	93.09	19.55	1.57	37.2
	MLZ045	6	7100	24232	3.32	2.13	7.27	98.57	20.70	1.57	37.2
	MLZ048	7	7600	25939	3.54	2.13	7.27	107.48	22.57	1.57	37.2
	MLZ058	7.5	9100	31058	4.28	2.12	7.24	125.95	26.45	2.66	44
	MLZ066	9	10400	35495	4.85	2.15	7.34	148.8	31.25	2.66	45.18
	MLZ076	10	11700	39932	5.61	2.09	7.13	162.43	34.11	2.66	45.18
R22	MLZ/MLM015	2	3900	13311	1.74	2.26	7.71	33.77	7.09	1.06	30.84
	MLZ/MLM019	2.5	5200	17747	2.22	2.37	8.09	43.51	9.14	1.06	30.84
	MLZ/MLM021	3	5600	19113	2.36	2.36	8.05	46.21	9.70	1.06	30.84
	MLZ/MLM026	3.5	7000	23891	2.93	2.39	8.16	57.11	11.99	1.06	30.84
	MLZ/MLM030	4	8200	27986	3.46	2.36	8.05	68.79	14.45	1.57	37.2
	MLZ/MLM038	5	9600	32765	4.06	2.36	8.05	80.95	17.00	1.57	37.2
	MLZ/MLM042	5.5	10900	37201	5.00	2.18	7.44	93.09	19.55	1.57	37.2
	MLZ/MLM045	6	11700	39932	4.91	2.38	8.12	98.57	20.70	1.57	37.2
	MLZ/MLM048	7	12900	44027	5.36	2.4	8.19	107.48	22.57	1.57	37.2
	MLZ/MLM058	7.5	14900	50853	6.34	2.34	7.99	125.95	26.45	2.66	44
	MLZ/MLM066	9	17000	58020	7.14	2.38	8.12	148.8	31.25	2.66	45.18
	MLZ/MLM076	10	20100	68601	8.40	2.39	8.16	162.43	34.11	2.66	45.18

* at EN12900 conditions: To= -10°C, Tc= 45°C, RGT= 20°C, SC= 0K
** R507 performance data are nearly identical to R404A performance data
***: To= -10°C, Tc= 45°C, SH=10K, SC= 0K
Motor voltage code 4: 400V/3~/50 Hz & 460V/3~/60 Hz
MLZ/MLM042: motor voltage code 1: 208-230V/1~/60 Hz

60 Hz

	Model	HP	Nominal cooling capacity *		Power input *	Efficiency *		Swept volume	Displacement	Oil charge	Net weight (with oil)
						COP	EER				
			W	Btu/h	kW	W/W	Btu/h/W	cm3/rev	m3/h	Litres	kg
R407A	MLZ015	2	3800	12969	1.85	2.04	6.96	33.77	7.09	1.06	30.84
	MLZ019	2.5	4900	16724	2.40	2.06	7.03	43.51	9.14	1.06	30.84
	MLZ021	3	5300	18089	2.63	2.01	6.86	46.21	9.70	1.06	30.84
	MLZ026	3.5	6400	21843	3.10	2.07	7.06	57.11	11.99	1.06	30.84
	MLZ030	4	7900	26962	3.52	2.25	7.68	68.79	14.45	1.57	37.2
	MLZ038	5	9200	31399	4.10	2.24	7.65	80.95	17.00	1.57	37.2
	MLZ045	6	11200	38225	5.37	2.09	7.13	98.57	20.70	1.57	37.2
	MLZ048	7	12200	41638	6.01	2.03	6.93	107.48	22.57	1.57	37.2
	MLZ058	7.5	14300	48805	6.68	2.14	7.30	125.95	26.45	2.66	44
	MLZ066	9	16700	56997	7.89	2.12	7.24	148.8	31.25	2.66	45.18
	MLZ076	10	18100	61775	8.64	2.09	7.13	162.43	34.11	2.66	45.18
R407F	MLZ015	2	4100	13993	1.98	2.05	7.00	33.77	7.09	1.06	30.84
	MLZ019	2.5	5300	18089	2.57	2.06	7.03	43.51	9.14	1.06	30.84
	MLZ021	3	5700	19454	2.81	2.01	6.86	46.21	9.70	1.06	30.84
	MLZ026	3.5	6900	23549	3.32	2.08	7.10	57.11	11.99	1.06	30.84
	MLZ030	4	8500	29010	3.77	2.26	7.71	68.79	14.45	1.57	37.2
	MLZ038	5	9800	33447	4.38	2.24	7.65	80.95	17.00	1.57	37.2
	MLZ045	6	12000	40956	5.75	2.09	7.13	98.57	20.70	1.57	37.2
	MLZ048	7	13100	44710	6.44	2.04	6.96	107.48	22.57	1.57	37.2
	MLZ058	7.5	15300	52218	7.15	2.14	7.30	125.95	26.45	2.66	44
	MLZ066	9	18000	61433	8.45	2.13	7.27	148.8	31.25	2.66	45.18
	MLZ076	10	19400	66212	9.25	2.09	7.13	162.43	34.11	2.66	45.18

* at EN12900 conditions: To= -10°C, Tc= 45°C, RGT= 20°C, SC= 0K
** R507 performance data are nearly identical to R404A performance data
Motor voltage code 4: 400V/3~/50 Hz & 460V/3~/60 Hz
MLZ/MLM042: motor voltage code 1: 208-230V/1~/60 Hz
Only motor code4.code5 of MLZ are qualified with R407A/R407F

R404A / R507

	Model	To	-25		-20		-15		-10		-5		0		5		10	
		Tc	Qo	Pe	Qo	Pe	Qo	Pe	Qo	Pe	Qo	Pe	Qo	Pe	Qo	Pe	Qo	Pe
50 Hz	MLZ015T4	30	2300	1.25	2900	1.24	3500	1.22	4300	1.20	5200	1.18	6200	1.16	7400	1.14	8700	1.14
		40	1900	1.63	2400	1.60	3000	1.57	3700	1.54	4400	1.51	5300	1.49	6300	1.47	7400	1.47
		50	-	-	1800	2.10	2400	2.05	2900	2.00	3600	1.95	4300	1.91	5100	1.88	6000	1.86
	MLZ019T4	30	3000	1.51	3800	1.53	4600	1.53	5600	1.53	6700	1.52	8000	1.52	9500	1.53	11200	1.57
		40	2600	1.88	3300	1.92	4000	1.93	4800	1.93	5800	1.91	6900	1.90	8200	1.89	9700	1.89
		50	-	-	2700	2.36	3300	2.40	4000	2.41	4800	2.40	5800	2.38	6800	2.36	8100	2.34
	MLZ021T4	30	3200	1.60	4000	1.60	4900	1.61	5900	1.62	7100	1.63	8500	1.64	10000	1.66	11800	1.68
		40	2800	1.99	3500	2.01	4300	2.02	5100	2.03	6200	2.03	7300	2.03	8700	2.01	10300	2.00
		50	-	-	2900	2.52	3500	2.54	4300	2.55	5100	2.55	6100	2.53	7300	2.49	8600	2.44
	MLZ026T4	30	3900	2.00	4900	2.02	6000	2.03	7300	2.05	8800	2.06	10500	2.06	12500	2.07	14800	2.07
		40	3400	2.55	4200	2.56	5200	2.57	6300	2.58	7600	2.58	9100	2.59	10800	2.58	12800	2.58
		50	-	-	3600	3.26	4400	3.27	5300	3.27	6400	3.26	7600	3.25	9100	3.24	10800	3.23
	MLZ030T4	30	4800	2.33	6000	2.36	7300	2.38	8800	2.39	10600	2.40	12700	2.42	15000	2.43	17700	2.44
		40	4100	2.95	5100	2.97	6300	2.98	7700	2.99	9300	3.00	11100	3.00	13100	3.00	15500	3.00
		50	-	-	4300	3.77	5300	3.77	6400	3.77	7800	3.76	9300	3.75	11100	3.73	13100	3.72
	MLZ038T4	30	5800	2.69	7200	2.69	8700	2.70	10500	2.72	12600	2.76	15000	2.81	17700	2.88	20800	2.97
		40	5000	3.45	6200	3.43	7600	3.42	9200	3.42	11000	3.43	13200	3.46	15600	3.50	18300	3.56
		50	-	-	5100	4.39	6300	4.37	7600	4.35	9200	4.34	11000	4.34	13100	4.35	15400	4.38
	MLZ042T5	30	6300	3.24	7900	3.33	9800	3.42	12000	3.50	14500	3.57	17500	3.60	20900	3.58	24800	3.51
		40	5500	4.12	6900	4.14	8500	4.19	10400	4.24	12500	4.28	15000	4.31	18000	4.32	21500	4.28
		50	-	-	5800	5.32	7100	5.30	8600	5.30	10400	5.31	12600	5.32	15100	5.33	18100	5.31
	MLZ045T4	30	7100	3.46	8700	3.45	10700	3.44	12900	3.44	15500	3.44	18500	3.46	21900	3.49	25700	3.54
		40	6000	4.34	7500	4.35	9200	4.34	11200	4.33	13500	4.33	16100	4.33	19100	4.34	22500	4.36
		50	-	-	6100	5.53	7500	5.54	9200	5.54	11200	5.53	13500	5.53	16000	5.53	19000	5.53
	MLZ048T4	30	7700	3.80	9600	3.78	11700	3.76	14100	3.74	16900	3.72	20100	3.71	23700	3.69	27700	3.67
		40	6500	4.78	8200	4.78	10100	4.79	12300	4.79	14800	4.79	17600	4.79	20800	4.79	24400	4.78
		50	-	-	6600	5.93	8200	5.97	10100	6.01	12300	6.04	14700	6.07	17500	6.10	20600	6.12
	MLZ058T4	30	8700	4.18	10900	4.25	13500	4.33	16400	4.40	19800	4.46	23500	4.53	27800	4.59	32500	4.64
		40	7200	5.29	9300	5.33	11600	5.38	14200	5.43	17200	5.49	20500	5.55	24200	5.60	28400	5.66
		50	-	-	7400	6.81	9400	6.81	11700	6.83	14300	6.85	17100	6.88	20400	6.92	24000	6.96
	MLZ066T4	30	10000	4.92	12600	4.93	15600	4.96	19100	5.02	23100	5.12	27700	5.25	32900	5.43	38900	5.66
		40	8500	6.18	10800	6.18	13400	6.19	16400	6.23	19900	6.30	23900	6.40	28500	6.55	33700	6.73
		50	-	-	8900	7.90	11100	7.90	13600	7.92	16600	7.97	19900	8.05	23800	8.16	28200	8.32
	MLZ076T4	30	12200	5.71	15200	5.71	18500	5.75	22400	5.83	26800	5.94	31900	6.07	37800	6.21	44600	6.34
		40	10600	7.04	13100	7.04	15900	7.08	19100	7.15	22900	7.23	27200	7.33	32300	7.43	38200	7.51
		50	-	-	11000	8.70	13000	8.74	15400	8.80	18300	8.87	21800	8.94	25900	9.00	30800	9.04
60 Hz	MLZ015T4	30	2800	1.50	3500	1.49	4300	1.49	5200	1.48	6200	1.46	7500	1.45	8900	1.42	10500	1.38
		40	2300	1.87	2900	1.87	3600	1.87	4500	1.87	5400	1.86	6400	1.84	7600	1.81	9000	1.78
		50	-	-	2300	2.34	3000	2.35	3700	2.35	4400	2.35	5300	2.33	6300	2.31	7500	2.27
	MLZ019T4	30	3800	1.80	4600	1.82	5700	1.82	6900	1.81	8200	1.81	9700	1.82	11500	1.86	13500	1.94
		40	3200	2.21	4000	2.28	4900	2.31	5900	2.31	7100	2.30	8400	2.29	10000	2.29	11700	2.31
		50	-	-	3300	2.76	4100	2.84	5000	2.87	6000	2.87	7100	2.85	8400	2.83	9900	2.81
	MLZ021T4	30	4000	1.84	4900	1.94	6000	1.97	7300	1.98	8700	1.97	10400	1.96	12200	1.99	14200	2.06
		40	3400	2.29	4300	2.40	5200	2.45	6300	2.46	7600	2.44	9000	2.43	10600	2.44	12400	2.50
		50	-	-	3600	3.01	4400	3.06	5300	3.07	6400	3.05	7600	3.02	9000	3.02	10500	3.04
	MLZ026T4	30	5000	2.30	6100	2.40	7500	2.45	9100	2.47	10900	2.47	12900	2.47	15200	2.47	17800	2.50
		40	4300	2.85	5300	2.98	6500	3.05	7900	3.08	9400	3.09	11200	3.08	13200	3.07	15400	3.08
		50	-	-	4400	3.71	5400	3.80	6600	3.84	7900	3.84	9400	3.82	11100	3.80	13000	3.78
	MLZ030T4	30	5800	2.75	7200	2.77	8800	2.81	10700	2.84	12800	2.86	15200	2.86	17800	2.84	20800	2.78
		40	5100	3.45	6300	3.46	7600	3.47	9300	3.50	11100	3.53	13200	3.54	15500	3.53	18200	3.50
		50	-	-	5200	4.35	6400	4.34	7700	4.35	9300	4.36	11100	4.37	13100	4.37	15400	4.36
	MLZ038T4	30	7000	3.37	8600	3.35	10500	3.36	12700	3.39	15300	3.42	18100	3.42	21400	3.39	25100	3.31
		40	6000	4.20	7500	4.18	9200	4.19	11100	4.22	13300	4.24	15800	4.25	18600	4.23	21800	4.15
		50	-	-	6200	5.19	7700	5.20	9300	5.23	11200	5.26	13300	5.27	15600	5.25	18300	5.18
	MLZ045T4	30	8500	3.95	10500	4.01	12800	4.04	15500	4.05	18600	4.06	22000	4.06	26000	4.08	30400	4.11
		40	7400	4.93	9100	5.00	11100	5.03	13400	5.05	16100	5.05	19100	5.05	22600	5.06	26400	5.08
		50	-	-	7600	6.27	9300	6.30	11300	6.32	13500	6.31	16100	6.31	19000	6.31	22300	6.32
	MLZ048T4	30	9300	4.31	11400	4.35	14000	4.40	16900	4.44	20300	4.48	24100	4.48	28400	4.43	33100	4.32
		40	8100	5.41	9900	5.43	12100	5.48	14700	5.53	17600	5.56	21000	5.58	24700	5.55	28800	5.46
		50	-	-	8300	6.77	10100	6.80	12300	6.84	14800	6.88	17600	6.89	20800	6.87	24300	6.80
	MLZ058T4	30	10800	5.22	13600	5.29	16800	5.39	20500	5.51	24800	5.63	29600	5.72	35000	5.78	40900	5.78
		40	9000	6.57	11400	6.54	14200	6.57	17400	6.64	21100	6.75	25300	6.86	29900	6.95	35100	7.01
		50	-	-	8900	8.27	11200	8.19	13900	8.17	17000	8.21	20400	8.29	24300	8.38	28500	8.46
	MLZ066T4	30	12600	5.95	15500	6.05	18900	6.19	22900	6.35	27600	6.52	32800	6.68	38800	6.82	45500	6.93
		40	10900	7.32	13500	7.39	16500	7.50	19900	7.64	23900	7.79	28500	7.94	33600	8.07	39300	8.17
		50	-	-	11200	9.07	13800	9.15	16700	9.25	20100	9.37	23800	9.50	28100	9.61	32900	9.69
	MLZ076T4	30	14600	6.72	17900	6.93	21800	7.09	26400	7.22	31700	7.37	37800	7.57	44800	7.86	52900	8.27
		40	12600	8.21	15500	8.43	18900	8.59	22800	8.70	27300	8.83	32500	8.99	38500	9.23	45300	9.59
		50	-	-	12900	10.35	15700	10.50	18900	10.60	22600	10.69	26800	10.82	31700	11.01	37300	11.30

Legend: To: Evaporating temperature in °C Qo: Cooling capacity in W RGT= 20°C
Tc: Condensing temperature in °C Pe: Power input in kW Subooling= 0K

Capacity data at other conditions are available in the datasheets at: www.danfoss.com/odsg

R22

	Model	To	-20		-15		-10		-5		0		5		10	
		Tc	Qo	Pe	Qo	Pe	Qo	Pe	Qo	Pe	Qo	Pe	Qo	Pe	Qo	Pe
50Hz	MLZ/MLM015T4	30	2600	1.08	3200	1.10	3800	1.11	4600	1.13	5500	1.15	6600	1.17	7800	1.19
		40	-	-	2800	1.36	3500	1.38	4200	1.40	5100	1.41	6000	1.42	7100	1.44
		50	-	-	-	-	-	-	3800	1.71	4500	1.73	5400	1.75	6400	1.76
	MLZ/MLM019T4	30	3400	1.32	4200	1.34	5000	1.36	6000	1.38	7100	1.40	8500	1.43	10000	1.46
		40	-	-	3800	1.67	4600	1.69	5500	1.71	6500	1.72	7800	1.74	9200	1.76
		50	-	-	-	-	-	-	4900	2.09	5800	2.11	6900	2.13	8300	2.14
	MLZ/MLM021T4	30	3600	1.43	4400	1.47	5300	1.50	6400	1.52	7600	1.55	9000	1.57	10600	1.60
		40	-	-	4000	1.79	4800	1.83	5800	1.85	6900	1.88	8200	1.89	9800	1.90
		50	-	-	-	-	-	-	5200	2.27	6200	2.30	7400	2.31	8800	2.32
	MLZ/MLM026T4	30	4400	1.76	5400	1.77	6600	1.77	7900	1.76	9600	1.75	11500	1.74	13800	1.75
		40	-	-	4900	2.17	6000	2.19	7200	2.19	8800	2.18	10600	2.16	12700	2.15
		50	-	-	-	-	-	-	6500	2.71	7900	2.71	9500	2.69	11400	2.66
	MLZ/MLM030T4	30	5100	2.08	6400	2.14	7900	2.19	9700	2.25	11600	2.32	13800	2.38	16200	2.46
		40	-	-	5800	2.60	7200	2.67	8800	2.72	10700	2.78	12700	2.83	14900	2.89
		50	-	-	-	-	-	-	7900	3.30	9600	3.36	11500	3.40	13600	3.44
	MLZ/MLM038T4	30	5800	2.40	7400	2.48	9200	2.57	11300	2.66	13700	2.76	16300	2.84	19100	2.91
		40	-	-	6800	3.04	8500	3.13	10400	3.22	12600	3.29	14900	3.36	17500	3.40
		50	-	-	-	-	-	-	9400	3.90	11400	3.98	13600	4.03	15900	4.06
	MLZ/MLM042T5	30	9000	3.18	9500	3.05	10800	3.01	12700	3.03	15400	3.11	18500	3.23	22000	3.36
		40	-	-	8400	3.81	9700	3.75	11600	3.75	14000	3.79	16600	3.86	19600	3.93
		50	-	-	-	-	-	-	10300	4.78	12600	4.79	15000	4.81	17600	4.82
	MLZ/MLM045T4	30	7000	3.05	8800	3.08	11000	3.08	13600	3.08	16500	3.08	19700	3.11	23200	3.17
		40	-	-	7900	3.72	9900	3.76	12300	3.77	15000	3.77	18000	3.79	21200	3.84
		50	-	-	-	-	-	-	10800	4.62	13300	4.64	16100	4.65	19100	4.68
	MLZ/MLM048T4	30	8100	3.32	10000	3.36	12200	3.37	14800	3.36	17800	3.37	21300	3.40	25300	3.47
		40	-	-	9000	4.07	11100	4.11	13500	4.12	16300	4.12	19500	4.13	23200	4.17
		50	-	-	-	-	-	-	12200	5.05	14700	5.06	17600	5.07	20900	5.10
	MLZ/MLM058T4	30	9200	3.93	11500	3.97	14300	3.96	17400	3.95	21100	3.94	25300	3.98	30200	4.09
		40	-	-	10500	4.76	13000	4.80	15900	4.80	19300	4.81	23200	4.84	27800	4.92
		50	-	-	-	-	-	-	14100	5.89	17300	5.90	20900	5.92	25100	5.97
	MLZ/MLM066T4	30	10200	4.34	12900	4.40	16200	4.43	20000	4.45	24300	4.49	29100	4.57	34400	4.71
		40	-	-	11900	5.34	14900	5.39	18300	5.43	22300	5.48	26800	5.54	31600	5.66
		50	-	-	-	-	-	-	16500	6.62	20200	6.66	24200	6.72	28700	6.80
	MLZ/MLM076T4	30	12400	5.26	15400	5.27	19000	5.20	23200	5.11	27900	5.06	33300	5.12	39300	5.34
		40	-	-	14100	6.36	17400	6.33	21300	6.27	25600	6.22	30500	6.25	36100	6.42
		50	-	-	-	-	-	-	19100	7.68	23100	7.64	27600	7.65	32600	7.78
60Hz	MLZ/MLM015T4	30	3000	1.22	3800	1.25	4600	1.29	5600	1.32	6700	1.36	7900	1.40	9300	1.45
		40	-	-	3400	1.54	4200	1.58	5100	1.62	6100	1.65	7200	1.68	8500	1.70
		50	-	-	-	-	-	-	4500	1.96	5500	2.00	6500	2.03	7700	2.04
	MLZ/MLM019T4	30	3900	1.56	4900	1.60	6000	1.65	7300	1.70	8800	1.74	10400	1.76	12200	1.76
		40	-	-	4500	1.97	5500	2.02	6700	2.07	8100	2.11	9600	2.13	11300	2.12
		50	-	-	-	-	-	-	6000	2.49	7300	2.53	8700	2.54	10200	2.53
	MLZ/MLM021T4	30	4100	1.69	5200	1.73	6400	1.77	7800	1.80	9400	1.84	11200	1.90	13200	1.97
		40	-	-	4800	2.12	5900	2.15	7200	2.18	8700	2.20	10300	2.24	12100	2.29
		50	-	-	-	-	-	-	6400	2.63	7800	2.66	9300	2.69	11000	2.73
	MLZ/MLM026T4	30	5100	2.02	6300	2.07	7800	2.11	9500	2.16	11500	2.20	13700	2.23	16300	2.24
		40	-	-	5900	2.57	7300	2.64	8900	2.69	10600	2.73	12600	2.75	14900	2.74
		50	-	-	-	-	-	-	8100	3.32	9700	3.37	11500	3.39	13500	3.37
	MLZ/MLM030T4	30	6000	2.44	7500	2.51	9400	2.57	11500	2.65	13800	2.72	16400	2.81	19300	2.89
		40	-	-	6900	3.07	8600	3.14	10500	3.21	12700	3.27	15100	3.34	17800	3.40
		50	-	-	-	-	-	-	9500	3.89	11500	3.96	13800	4.01	16200	4.06
	MLZ/MLM038T4	30	6900	2.83	8800	2.92	11000	3.03	13500	3.14	16300	3.25	19400	3.35	22800	3.42
		40	-	-	8100	3.58	10100	3.68	12400	3.79	15000	3.88	17900	3.96	20900	4.00
		50	-	-	-	-	-	-	11200	4.59	13600	4.68	16200	4.75	19000	4.79
	MLZ/MLM045T4	30	8600	3.50	10800	3.57	13500	3.64	16500	3.71	20000	3.79	23800	3.89	28000	4.01
		40	-	-	9800	4.38	12300	4.45	15100	4.51	18400	4.57	21900	4.63	25800	4.70
		50	-	-	-	-	-	-	13600	5.50	16500	5.56	19800	5.61	23400	5.66
	MLZ/MLM048T4	30	9700	3.76	12200	3.82	15000	3.89	18300	3.98	21900	4.08	26000	4.21	30500	4.36
		40	-	-	10900	4.74	13600	4.82	16700	4.90	20100	4.97	23900	5.05	28200	5.14
		50	-	-	-	-	-	-	14900	6.04	18100	6.11	21600	6.17	25600	6.22
	MLZ/MLM058T4	30	10900	4.50	13800	4.62	17200	4.74	21100	4.87	25600	5.00	30600	5.13	36200	5.27
		40	-	-	12600	5.61	15700	5.75	19300	5.88	23500	5.99	28200	6.08	33400	6.16
		50	-	-	-	-	-	-	17300	7.16	21100	7.26	25500	7.33	30400	7.37
	MLZ/MLM066T4	30	12200	5.03	15500	5.18	19400	5.35	24000	5.51	29200	5.68	35000	5.83	41300	5.97
		40	-	-	14200	6.30	17800	6.48	22100	6.65	26900	6.82	32300	6.96	38200	7.08
		50	-	-	-	-	-	-	20000	8.06	24500	8.22	29400	8.36	34700	8.46
	MLZ/MLM076T4	30	14500	6.07	18300	6.20	22800	6.31	28000	6.42	33900	6.54	40400	6.69	47400	6.87
		40	-	-	16900	7.48	21000	7.62	25800	7.74	31200	7.86	37100	7.98	43500	8.13
		50	-	-	-	-	-	-	23400	9.43	28300	9.55	33700	9.66	39600	9.78

Legend: To: Evaporating temperature in °C Qo: Cooling capacity in W RGT = 20°C
Tc: Condensing temperature in °C Pe: Power input in kW Subcooling =0 K

Capacity data at other conditions are available in the datasheets at: www.danfoss.com/odsg

R134a

	Model	To	-10		-5		0		5		10		15	
		Tc	Qo	Pe	Qo	Pe	Qo	Pe	Qo	Pe	Qo	Pe	Qo	Pe
50Hz	MLZ015T4	30	2400	0.74	3000	0.75	3700	0.75	4500	0.76	5400	0.77	-	-
		40	-	-	2700	0.92	3300	0.93	4100	0.94	4900	0.95	5900	0.96
		50	-	-	2400	1.14	3000	1.15	3600	1.16	4400	1.17	5200	1.18
	MLZ019T4	30	3100	0.95	3800	0.96	4700	0.96	5800	0.97	7000	0.99	-	-
		40	-	-	3500	1.18	4300	1.19	5200	1.20	6300	1.21	7600	1.22
		50	-	-	3100	1.44	3800	1.46	4700	1.48	5600	1.49	6700	1.50
	MLZ021T4	30	3300	0.98	4100	0.99	5000	1.00	6100	1.01	7400	1.03	-	-
		40	-	-	3700	1.22	4600	1.23	5600	1.25	6700	1.26	8000	1.28
		50	-	-	3300	1.49	4000	1.51	4900	1.53	6000	1.54	7200	1.56
	MLZ026T4	30	4100	1.19	5100	1.20	6200	1.22	7600	1.23	9100	1.25	-	-
		40	-	-	4600	1.48	5600	1.50	6900	1.52	8300	1.54	9900	1.55
		50	-	-	4100	1.82	5000	1.85	6100	1.87	7400	1.89	8900	1.91
	MLZ030T4	30	4900	1.42	6100	1.43	7500	1.45	9100	1.46	11000	1.48	-	-
		40	-	-	5500	1.76	6800	1.78	8300	1.80	10000	1.82	12000	1.84
		50	-	-	4900	2.16	6000	2.19	7400	2.21	8900	2.23	10700	2.26
	MLZ038T4	30	5800	1.73	7200	1.75	8800	1.77	10700	1.79	12900	1.81	-	-
		40	-	-	6500	2.15	8000	2.18	9700	2.20	11700	2.22	14000	2.24
		50	-	-	5700	2.64	7100	2.68	8700	2.71	10500	2.73	12500	2.75
	MLZ042T5	30	6600	2.15	8200	2.20	10100	2.23	12100	2.28	14400	2.35	-	-
		40	-	-	7500	2.60	9200	2.64	11100	2.68	13200	2.72	15700	2.78
		50	-	-	6500	3.08	8100	3.15	9900	3.19	11800	3.22	14100	3.25
	MLZ045T4	30	7100	1.96	8900	1.99	11000	2.00	13300	2.01	16000	2.02	-	-
		40	-	-	8000	2.46	9900	2.49	12100	2.51	14600	2.53	17400	2.55
		50	-	-	7100	3.03	8800	3.07	10800	3.10	13000	3.13	15600	3.17
	MLZ048T4	30	7600	2.12	9500	2.15	11600	2.18	14100	2.20	16900	2.22	-	-
		40	-	-	8500	2.66	10500	2.70	12800	2.72	15400	2.74	18300	2.75
		50	-	-	7500	3.27	9300	3.32	11400	3.36	13800	3.38	16400	3.39
	MLZ058T4	30	9100	2.64	11300	2.69	13800	2.77	16600	2.83	20000	2.87	-	-
		40	-	-	10100	3.33	12400	3.40	15100	3.44	18100	3.45	21600	3.40
		50	-	-	9000	4.06	11100	4.15	13400	4.20	16100	4.20	19200	4.12
	MLZ066T4	30	10500	3.01	13000	3.07	16000	3.14	19300	3.20	23200	3.24	-	-
		40	-	-	11800	3.79	14500	3.85	17500	3.89	21100	3.90	25000	3.86
		50	-	-	10400	4.62	12800	4.70	15600	4.75	18800	4.75	22300	4.69
	MLZ076T4	30	11800	3.41	-	3.49	17900	3.58	21600	3.65	25800	3.69	-	-
		40	-	-	13100	4.31	16100	4.39	19600	4.44	23500	4.45	28000	4.39
		50	-	-	11600	5.26	14300	5.36	17400	5.42	21000	5.42	25000	5.34
60Hz	MLZ015T4	30	3000	0.89	3700	0.90	4600	0.92	5500	0.94	6600	0.96	-	-
		40	-	-	3400	1.10	4200	1.12	5100	1.14	6100	1.16	7200	1.18
		50	-	-	3000	1.33	3700	1.36	4600	1.38	5500	1.40	6500	1.43
	MLZ019T4	30	3800	1.15	4800	1.18	5900	1.20	7100	1.22	8500	1.25	-	-
		40	-	-	4300	1.43	5400	1.46	6500	1.48	7800	1.50	9300	1.54
		50	-	-	3900	1.73	4800	1.77	5900	1.79	7100	1.82	8400	1.84
	MLZ021T4	30	4100	1.19	5100	1.21	6200	1.23	7600	1.25	9100	1.28	-	-
		40	-	-	4600	1.48	5700	1.50	6900	1.52	8300	1.54	9900	1.57
		50	-	-	4100	1.79	5100	1.83	6200	1.85	7500	1.87	8900	1.90
	MLZ026T4	30	5000	1.44	6300	1.46	7700	1.49	9300	1.52	11200	1.57	-	-
		40	-	-	5700	1.78	7000	1.82	8600	1.85	10300	1.88	12200	1.91
		50	-	-	5100	2.16	6300	2.22	7700	2.26	9300	2.29	11000	2.30
	MLZ030T4	30	6000	1.75	7500	1.78	9300	1.81	11300	1.85	13500	1.90	-	-
		40	-	-	6800	2.18	8500	2.21	10300	2.24	12400	2.28	14700	2.33
		50	-	-	6100	2.64	7600	2.68	9300	2.72	11200	2.76	13300	2.81
	MLZ038T4	30	7100	2.06	8800	2.10	10900	2.15	13200	2.21	15900	2.26	-	-
		40	-	-	8000	2.57	9900	2.62	12100	2.67	14600	2.72	17300	2.77
		50	-	-	7200	3.14	8900	3.19	10900	3.24	13200	3.29	15700	3.34
	MLZ045T4	30	8800	2.45	11000	2.49	13500	2.53	16300	2.58	19500	2.65	-	-
		40	-	-	9900	3.05	12200	3.09	14800	3.13	17800	3.18	21100	3.26
		50	-	-	8600	3.74	10700	3.79	13100	3.83	15800	3.88	18900	3.94
	MLZ048T4	30	9300	2.61	11600	2.66	14200	2.72	17200	2.78	20600	2.86	-	-
		40	-	-	10400	3.26	12900	3.31	15600	3.37	18800	3.43	22200	3.49
		50	-	-	9200	3.99	11300	4.06	13900	4.11	16700	4.16	19900	4.21
	MLZ058T4	30	11100	3.14	13700	3.23	16800	3.35	20200	3.47	24000	3.57	-	-
		40	-	-	12400	3.96	15200	4.07	18300	4.17	21900	4.24	25900	4.27
		50	-	-	11000	4.84	13500	4.96	16300	5.06	19600	5.12	23300	5.13
	MLZ066T4	30	12700	3.60	15700	3.70	19200	3.83	23200	3.97	27600	4.10	-	-
		40	-	-	14200	4.53	17400	4.66	21100	4.77	25200	4.85	29800	4.90
		50	-	-	12600	5.52	15500	5.68	18800	5.79	22500	5.86	26700	5.85
	MLZ076T4	30	14300	4.12	17600	4.23	21500	4.38	26000	4.54	31000	4.70	-	-
		40	-	-	16000	5.19	19600	5.33	23600	5.46	28300	5.56	33400	5.61
		50	-	-	14200	6.35	17400	6.51	21100	6.64	25300	6.71	29800	6.71

Legend: To: Evaporating temperature in °C Qo: Cooling capacity in W RGT = 20°C
Tc: Condensing temperature in °C Pe: Power input in kW Subcooling =0 K
Capacity data at other conditions are available in the datasheets at: www.danfoss.com/odsg

R407A

	Model	To	-20		-15		-10		-5		0		5		10	
		Tc	Qo	Pe	Qo	Pe	Qo	Pe	Qo	Pe	Qo	Pe	Qo	Pe	Qo	Pe
50Hz	MLZ015T4	30	2400	1.09	3100	1.11	3800	1.13	4700	1.14	5800	1.14	7000	1.12	8400	1.10
		40	-	-	2700	1.37	3400	1.39	4200	1.41	5100	1.42	6300	1.43	7600	1.42
		50	-	-	-	-	2800	1.73	3500	1.76	4400	1.78	5400	1.80	6600	1.81
	MLZ019T4	30	3200	1.44	4000	1.47	5000	1.49	6100	1.50	7500	1.50	9100	1.48	10900	1.44
		40	-	-	3400	1.80	4300	1.83	5400	1.86	6600	1.88	8100	1.88	9800	1.87
		50	-	-	-	-	3700	2.28	4600	2.32	5700	2.35	7000	2.37	8500	2.38
	MLZ021T4	30	3200	1.52	4100	1.56	5100	1.59	6300	1.61	7700	1.63	9400	1.64	11200	1.65
		40	-	-	3600	1.93	4500	1.96	5600	1.99	6900	2.02	8400	2.04	10100	2.05
		50	-	-	-	-	3900	2.50	4900	2.53	6000	2.56	7300	2.58	8800	2.61
	MLZ026T4	30	4100	1.87	5200	1.91	6500	1.94	8000	1.97	9700	2.00	11800	2.01	14100	2.02
		40	-	-	4500	2.37	5700	2.41	7100	2.44	8700	2.47	10500	2.50	12700	2.51
		50	-	-	-	-	4900	3.06	6100	3.10	7500	3.14	9200	3.17	11100	3.19
	MLZ030T4	30	5000	2.07	6300	2.12	7800	2.15	9700	2.16	11800	2.18	14400	2.20	17300	2.24
		40	-	-	5600	2.63	6900	2.68	8500	2.71	10400	2.72	12700	2.72	15300	2.73
		50	-	-	-	-	6000	3.32	7400	3.37	9000	3.40	11000	3.40	13300	3.39
	MLZ038T4	30	5800	2.41	7300	2.47	9100	2.50	11200	2.52	13700	2.54	16600	2.56	20000	2.61
		40	-	-	6500	3.06	8000	3.12	9900	3.15	12100	3.16	14700	3.17	17700	3.17
		50	-	-	-	-	7000	3.86	8600	3.92	10500	3.95	12700	3.96	15400	3.95
	MLZ042T5	30	6700	3.19	8400	3.22	10500	3.24	13000	3.26	15900	3.29	19300	3.37	23200	3.49
		40	-	-	7400	4.00	9200	4.03	11500	4.04	14100	4.05	17100	4.08	20700	4.13
		50	-	-	-	-	7900	5.09	9900	5.12	12200	5.13	14900	5.13	18000	5.13
	MLZ045T4	30	7200	3.19	9200	3.24	11500	3.28	14200	3.31	17400	3.31	21100	3.28	25300	3.21
		40	-	-	7800	4.04	10000	4.06	12400	4.09	15300	4.12	18600	4.12	22500	4.11
		50	-	-	-	-	8300	5.11	10500	5.11	13100	5.12	16000	5.13	19500	5.13
	MLZ048T4	30	7900	3.52	10100	3.57	12600	3.61	15600	3.64	19100	3.65	23200	3.62	27800	3.54
		40	-	-	8600	4.45	10900	4.48	13600	4.51	16800	4.54	20500	4.55	24700	4.53
		50	-	-	-	-	9100	5.63	11500	5.63	14400	5.64	17600	5.65	21400	5.66
	MLZ058T4	30	9000	3.90	11400	3.98	14200	4.07	17400	4.15	21300	4.19	25700	4.16	30800	4.04
		40	-	-	9900	5.00	12400	5.05	15300	5.13	18800	5.21	22700	5.25	27300	5.24
		50	-	-	-	-	10600	6.44	13100	6.46	16100	6.51	19600	6.57	23600	6.61
	MLZ066T4	30	10500	4.65	13300	4.75	16600	4.85	20400	4.95	24900	4.99	30000	4.96	36000	4.81
		40	-	-	11600	5.96	14500	6.03	17900	6.12	21900	6.21	26600	6.26	31900	6.25
		50	-	-	-	-	12300	7.68	15400	7.70	18900	7.77	22900	7.84	27600	7.88
	MLZ076T4	30	11500	5.30	14800	5.32	18600	5.37	23000	5.44	28200	5.54	34200	5.66	41100	5.82
		40	-	-	12600	6.67	16000	6.68	20100	6.72	24800	6.78	30200	6.87	36400	6.99
		50	-	-	-	-	13400	8.48	16900	8.47	21100	8.49	25900	8.54	31500	8.62
60Hz	MLZ015T4	30	2900	1.31	3700	1.32	4700	1.33	5800	1.33	7100	1.34	8600	1.35	10300	1.38
		40	-	-	3200	1.64	4100	1.66	5100	1.67	6300	1.67	7600	1.68	9200	1.69
		50	-	-	-	-	3500	2.07	4400	2.09	5400	2.11	6600	2.12	8000	2.12
	MLZ019T4	30	3700	1.70	4800	1.71	6100	1.72	7500	1.72	9200	1.73	11200	1.75	13400	1.78
		40	-	-	4200	2.12	5300	2.15	6600	2.16	8200	2.16	9900	2.17	12000	2.18
		50	-	-	-	-	4500	2.67	5700	2.71	7100	2.73	8600	2.74	10400	2.75
	MLZ021T4	30	4100	1.83	5200	1.85	6400	1.89	7900	1.92	9700	1.95	11700	1.97	14000	1.99
		40	-	-	4500	2.31	5700	2.33	7000	2.37	8600	2.40	10400	2.44	12500	2.47
		50	-	-	-	-	4900	2.98	6100	3.01	7500	3.04	9100	3.08	10900	3.12
	MLZ026T4	30	5000	2.15	6300	2.19	7800	2.22	9600	2.26	11800	2.30	14200	2.33	17000	2.35
		40	-	-	5500	2.72	6900	2.75	8500	2.79	10500	2.83	12700	2.87	15200	2.91
		50	-	-	-	-	5900	3.52	7400	3.55	9100	3.59	11000	3.64	13300	3.68
	MLZ030T4	30	6200	2.46	7700	2.51	9600	2.53	11800	2.56	14500	2.60	17700	2.68	21300	2.81
		40	-	-	6900	3.10	8500	3.16	10500	3.19	12800	3.22	15600	3.26	18900	3.32
		50	-	-	-	-	7400	3.90	9100	3.98	11100	4.02	13600	4.05	16500	4.08
	MLZ038T4	30	7200	2.86	8900	2.92	11100	2.95	13700	2.98	16800	3.02	20400	3.12	24700	3.28
		40	-	-	7900	3.61	9800	3.68	12100	3.72	14800	3.75	18100	3.79	21900	3.87
		50	-	-	-	-	8600	4.54	10500	4.63	12900	4.68	15700	4.71	19100	4.75
	MLZ045T4	30	8800	3.77	11200	3.84	14000	3.88	17300	3.90	21200	3.88	25700	3.80	30900	3.66
		40	-	-	9600	4.76	12100	4.80	15100	4.83	18600	4.82	22600	4.78	27200	4.69
		50	-	-	-	-	10200	6.01	12900	6.01	15900	6.00	19500	5.96	23500	5.89
	MLZ048T4	30	9600	4.22	12200	4.30	15300	4.35	18900	4.37	23100	4.34	28000	4.26	33700	4.10
		40	-	-	10500	5.34	13200	5.38	16500	5.41	20300	5.40	24700	5.36	29700	5.25
		50	-	-	-	-	11200	6.73	14000	6.73	17400	6.72	21200	6.68	25700	6.60
	MLZ058T4	30	11200	4.64	14100	4.68	17600	4.76	21600	4.85	26300	4.97	-	5.09	38100	5.22
		40	-	-	12300	5.90	15400	5.94	19000	6.01	23300	6.11	28100	6.23	33800	6.36
		50	-	-	-	-	13100	7.54	16300	7.57	20000	7.64	24300	7.74	29300	7.86
	MLZ066T4	30	13100	5.48	16500	5.53	20600	5.62	25300	5.73	30900	5.87	37300	6.01	44600	6.16
		40	-	-	14400	6.97	18100	7.02	22300	7.10	27300	7.22	33000	7.36	39600	7.52
		50	-	-	-	-	15400	8.91	19100	8.95	23500	9.03	28500	9.14	34300	9.29
	MLZ076T4	30	14100	6.09	17900	6.16	22400	6.25	27700	6.33	33800	6.36	40900	6.32	49100	6.15
		40	-	-	15500	7.68	19500	7.72	24200	7.81	29700	7.89	36000	7.95	43300	7.94
		50	-	-	-	-	16600	9.71	20700	9.72	25500	9.78	31000	9.86	37400	9.93

Legend: To: Evaporating temperature in °C
Tc: Condensing temperature in °C
Qo: Cooling capacity in W
Pe: Power input in kW
RGT = 20°C
Subcooling =0 K

Capacity data at other conditions are available in the datasheets at: www.danfoss.com/odsg
Only motor code4.code5 of MLZ are qualified with R407A

R407F

	Model	To	-20		-15		-10		-5		0		5		10	
		Tc	Qo	Pe	Qo	Pe	Qo	Pe	Qo	Pe	Qo	Pe	Qo	Pe	Qo	Pe
50Hz	MLZ015T4	30	2600	1.17	3300	1.19	4100	1.19	5000	1.20	6200	1.21	7500	1.21	9000	1.21
		40	-	-	-	-	3600	1.48	4500	1.50	5500	1.51	6700	1.51	8100	1.52
		50	-	-	-	-	-	-	3800	1.88	4700	1.90	5800	1.91	7100	1.92
	MLZ019T4	30	3400	1.54	4200	1.56	5300	1.58	6500	1.58	8000	1.59	9600	1.60	11600	1.60
		40	-	-	-	-	4600	1.96	5800	1.98	7100	1.99	8700	2.00	10500	2.00
		50	-	-	-	-	-	-	4900	2.48	6100	2.50	7500	2.52	9200	2.53
	MLZ021T4	30	3500	1.63	4400	1.66	5500	1.67	6700	1.69	8200	1.72	9900	1.77	11900	1.83
		40	-	-	-	-	4900	2.09	6000	2.11	7400	2.13	8900	2.16	10700	2.20
		50	-	-	-	-	-	-	5200	2.71	6400	2.72	7800	2.74	9500	2.77
	MLZ026T4	30	4300	2.00	5500	2.03	6900	2.05	8500	2.07	10300	2.11	12500	2.16	15000	2.25
		40	-	-	-	-	6100	2.57	7600	2.59	9300	2.61	11200	2.65	13500	2.70
		50	-	-	-	-	-	-	6600	3.31	8100	3.34	9900	3.36	11900	3.39
	MLZ030T4	30	5300	2.21	6700	2.26	8300	2.28	10200	2.29	12500	2.31	15200	2.34	18300	2.40
		40	-	-	-	-	7400	2.86	9100	2.88	11100	2.89	13500	2.90	16300	2.91
		50	-	-	-	-	-	-	8000	3.61	9700	3.63	11800	3.63	14300	3.63
	MLZ038T4	30	6200	2.57	7700	2.62	9600	2.65	11900	2.67	14500	2.68	17600	2.72	21100	2.79
		40	-	-	-	-	8600	3.33	10500	3.35	12900	3.36	15600	3.37	18900	3.39
		50	-	-	-	-	-	-	9200	4.20	11300	4.23	13700	4.23	16500	4.22
	MLZ042T5	30	7100	3.40	8900	3.43	11200	3.45	13800	3.46	16800	3.49	20400	3.55	24500	3.64
		40	-	-	-	-	9900	4.31	12200	4.32	15000	4.33	18200	4.34	22000	4.38
		50	-	-	-	-	-	-	10600	5.49	13100	5.50	16000	5.49	19300	5.49
	MLZ045T4	30	7700	3.39	9700	3.44	12200	3.49	15100	3.52	18400	3.51	22300	3.45	26700	3.30
		40	-	-	-	-	10600	4.34	13200	4.38	16300	4.40	19800	4.39	23900	4.34
		50	-	-	-	-	-	-	11300	5.48	14000	5.49	17200	5.50	20900	5.49
	MLZ048T4	30	8400	3.74	10700	3.80	13400	3.85	16600	3.88	20200	3.87	24500	3.80	29400	3.64
		40	-	-	-	-	11700	4.79	14600	4.83	17900	4.85	21800	4.85	26300	4.79
		50	-	-	-	-	-	-	12400	6.04	15400	6.05	18900	6.07	23000	6.05
	MLZ058T4	30	9500	4.15	12100	4.23	15000	4.32	18400	4.39	22500	4.43	27100	4.40	32400	4.27
		40	-	-	-	-	13200	5.40	16400	5.47	20000	5.54	24200	5.59	29000	5.57
		50	-	-	-	-	-	-	14100	6.93	17300	6.98	21000	7.03	25300	7.06
	MLZ066T4	30	11200	4.94	14100	5.04	17500	5.15	21600	5.24	26300	5.28	31700	5.24	38000	5.09
		40	-	-	-	-	15500	6.43	19100	6.52	23400	6.61	28300	6.66	33900	6.64
		50	-	-	-	-	-	-	16500	8.26	20300	8.31	24600	8.38	29600	8.42
	MLZ076T4	30	12300	5.70	15700	5.74	19700	5.77	24400	5.83	29800	5.92	36100	6.06	43300	6.27
		40	-	-	-	-	17100	7.15	21400	7.17	26400	7.22	32100	7.32	38700	7.49
		50	-	-	-	-	-	-	18200	9.07	22700	9.07	27800	9.11	33800	9.21
60Hz	MLZ015T4	30	3100	1.40	3900	1.41	4900	1.41	6100	1.41	7500	1.42	9100	1.44	10900	1.50
		40	-	-	-	-	4400	1.77	5400	1.78	6700	1.77	8100	1.78	9800	1.80
		50	-	-	-	-	-	-	4700	2.24	5800	2.25	7100	2.25	8600	2.26
	MLZ019T4	30	4000	1.82	5100	1.83	6400	1.82	8000	1.82	9800	1.83	11900	1.87	14300	1.94
		40	-	-	-	-	5700	2.29	7100	2.30	8700	2.30	10600	2.30	12800	2.33
		50	-	-	-	-	-	-	6100	2.90	7600	2.91	9300	2.91	11200	2.92
	MLZ021T4	30	4300	1.96	5500	1.97	6800	2.00	8400	2.02	10200	2.06	12400	2.11	14800	2.16
		40	-	-	-	-	6100	2.49	7500	2.51	9200	2.54	11100	2.58	13300	2.63
		50	-	-	-	-	-	-	6500	3.22	8000	3.25	9800	3.28	11800	3.32
	MLZ026T4	30	5300	2.31	6700	2.33	8300	2.35	10200	2.39	12500	2.43	15100	2.48	18000	2.55
		40	-	-	-	-	7400	2.94	9100	2.96	11200	3.00	13500	3.05	16200	3.10
		50	-	-	-	-	-	-	7900	3.80	9800	3.83	11900	3.87	14300	3.91
	MLZ030T4	30	6600	2.62	8200	2.67	10200	2.69	12500	2.71	15300	2.76	18600	2.84	22400	2.98
		40	-	-	-	-	9000	3.38	11200	3.41	13700	3.43	16600	3.47	20100	3.54
		50	-	-	-	-	-	-	9800	4.27	12000	4.31	14600	4.34	17700	4.37
	MLZ038T4	30	7600	3.05	9500	3.11	11800	3.13	14500	3.16	17800	3.21	21600	3.30	26000	3.47
		40	-	-	-	-	10500	3.93	12900	3.97	15800	3.99	19200	4.04	23300	4.12
		50	-	-	-	-	-	-	11300	4.96	13800	5.01	16900	5.04	20400	5.09
	MLZ045T4	30	9300	4.01	11900	4.08	14900	4.12	18400	4.13	22400	4.11	27100	4.04	32600	3.93
		40	-	-	-	-	13000	5.13	16100	5.14	19800	5.13	24000	5.09	28900	5.00
		50	-	-	-	-	-	-	13900	6.44	17100	6.42	20900	6.37	25200	6.29
	MLZ048T4	30	10200	4.50	12900	4.57	16200	4.61	20000	4.63	24500	4.60	29600	4.53	35500	4.41
		40	-	-	-	-	14100	5.74	17600	5.76	21600	5.75	26200	5.70	31600	5.60
		50	-	-	-	-	-	-	15100	7.22	18700	7.19	22800	7.13	27500	7.05
	MLZ058T4	30	11900	4.94	15000	4.98	18600	5.05	22900	5.14	27800	5.26	33500	5.41	40100	5.58
		40	-	-	-	-	16400	6.34	20300	6.41	24800	6.50	29900	6.63	35900	6.78
		50	-	-	-	-	-	-	17600	8.12	21500	8.18	26100	8.27	31400	8.40
	MLZ066T4	30	13900	5.84	17500	5.88	21800	5.96	26800	6.07	32600	6.22	39300	6.39	47100	6.60
		40	-	-	-	-	19300	7.49	23800	7.57	29000	7.68	35100	7.83	42100	8.01
		50	-	-	-	-	-	-	20600	9.59	25200	9.66	30600	9.77	36800	9.92
	MLZ076T4	30	15000	6.49	19000	6.54	23700	6.62	29300	6.69	35700	6.72	43100	6.71	51700	6.62
		40	-	-	-	-	20800	8.24	25800	8.31	31600	8.38	38200	8.44	45900	8.46
		50	-	-	-	-	-	-	22300	10.41	27400	10.45	33300	10.52	40100	10.59

Legend: To: Evaporating temperature in °C Qo: Cooling capacity in W RGT = 20°C
Tc: Condensing temperature in °C Pe: Power input in kW Subcooling =0 K

Capacity data at other conditions are available in the datasheets at: www.danfoss.com/odsg
Only motor code4.code5 of MLZ are qualified with R407F

MLZ/MLM015-019-021-026

Brazed

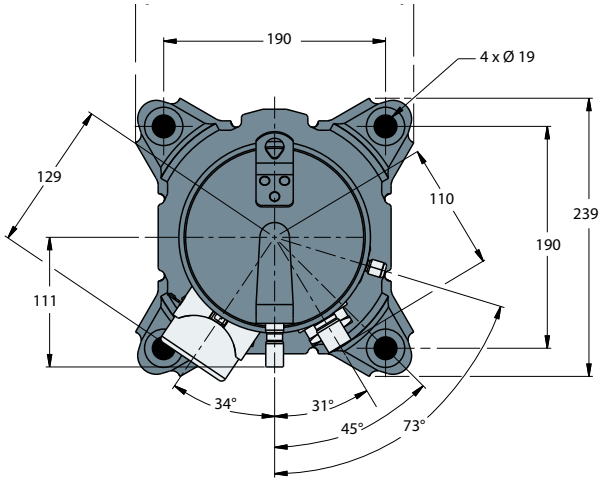

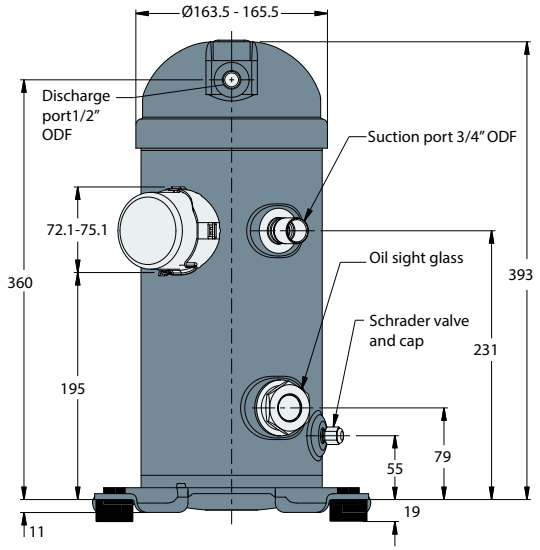

All dimensions in mm

Rotolock

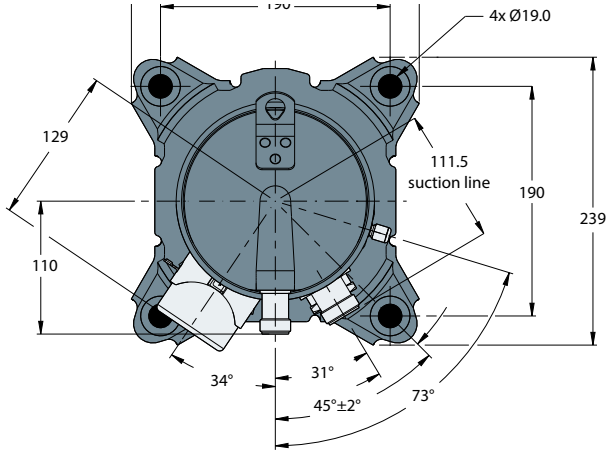

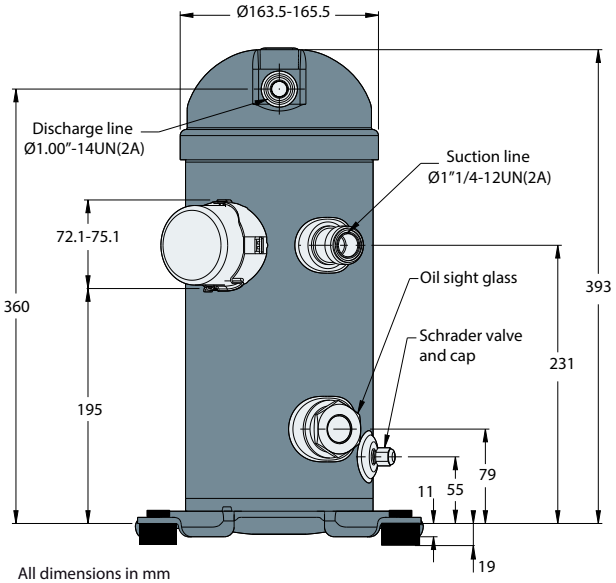

All dimensions in mm

Terminal box P & T (spade terminals)

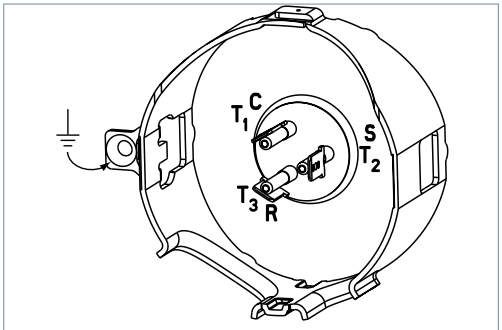

P & T terminal box type

Mounting grommet

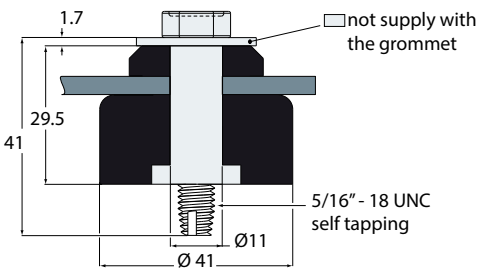

Recommended torque for mounting bolts: 11 Nm (±1 Nm)

Refer to section "Ordering information and packaging" for overview of shipped mounting accessories

MLZ/MLM030-038-042-045-048

Brazed

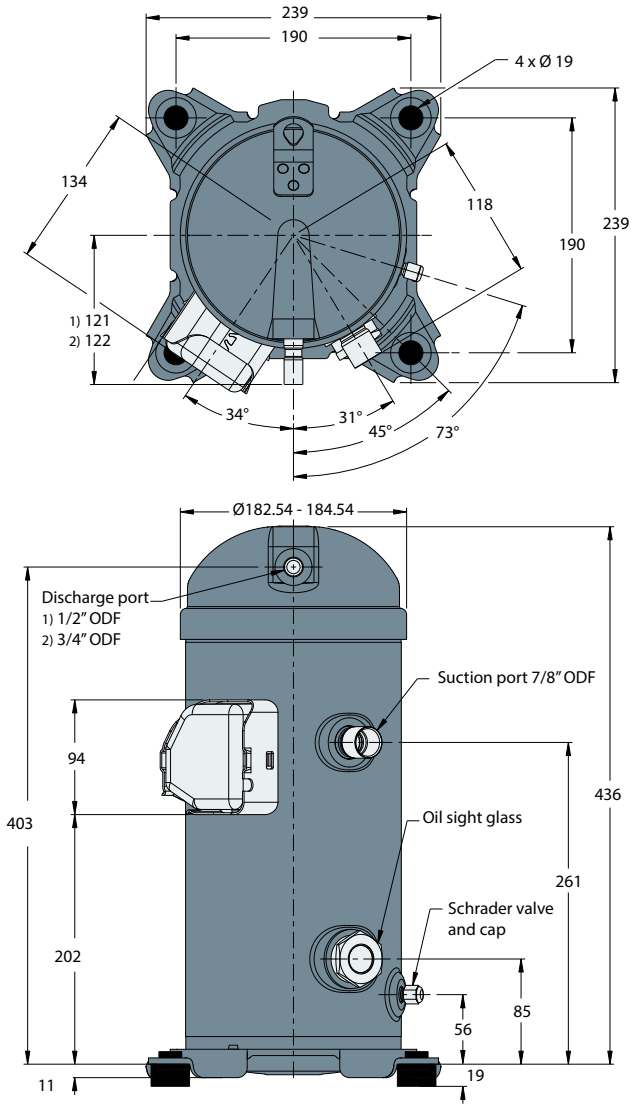

1) MLZ/MLM 030-038-042-045
2) MLZ/MLM 048

All dimensions in mm

Rotolock

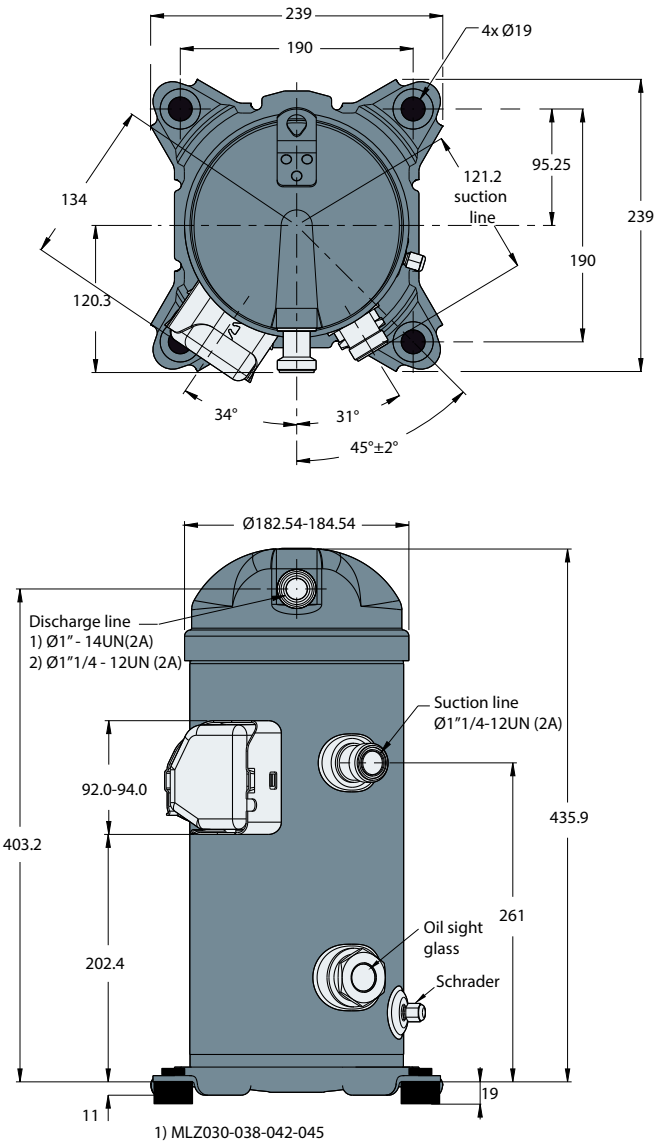

1) MLZ030-038-042-045
2) MLZ048

All dimensions in mm

Terminal box C & Q (screw terminals)

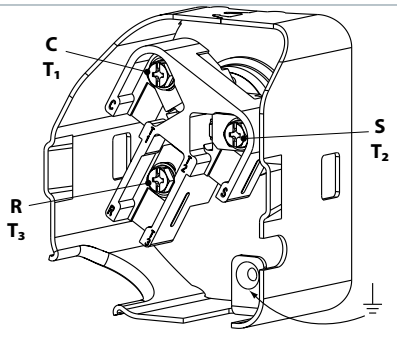

C & Q terminal box type

Mounting grommet

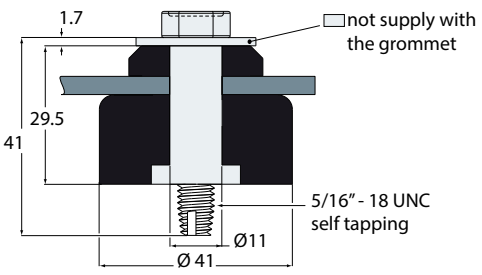

Recommended torque for mounting bolts:
11 Nm (±1 Nm)

Refer to section "Ordering information and packaging" for overview of shipped mounting accessories

MLZ/MLM058-066-076

Brazed

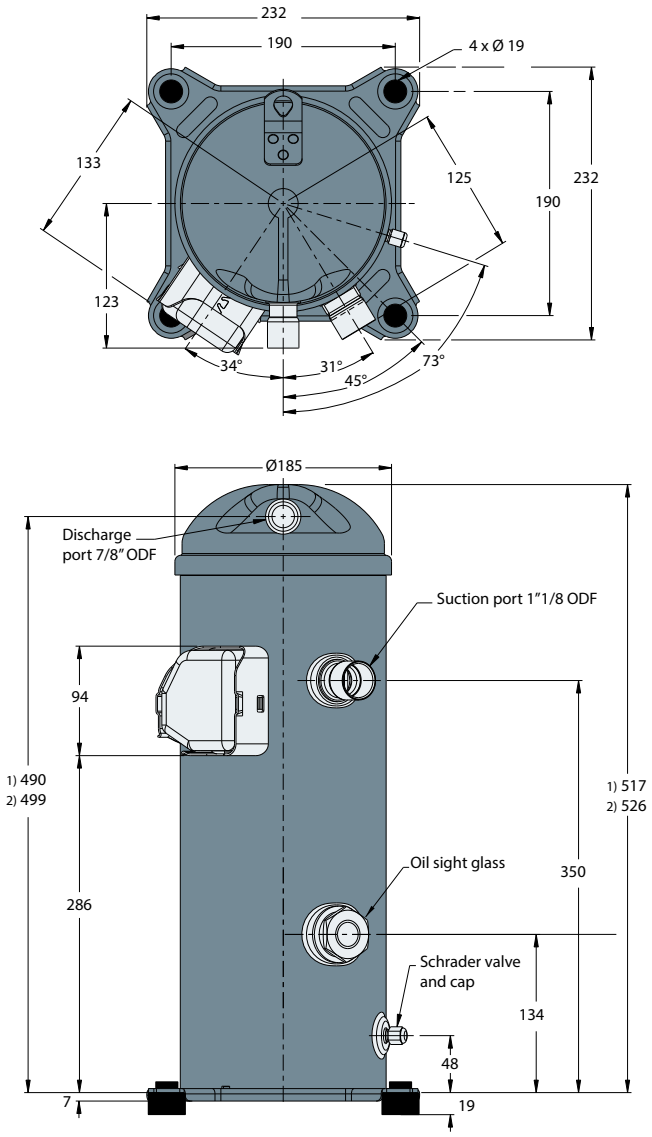

1) MLZ/M058
2) MLZ/M066-076

All dimensions in mm

Rotolock

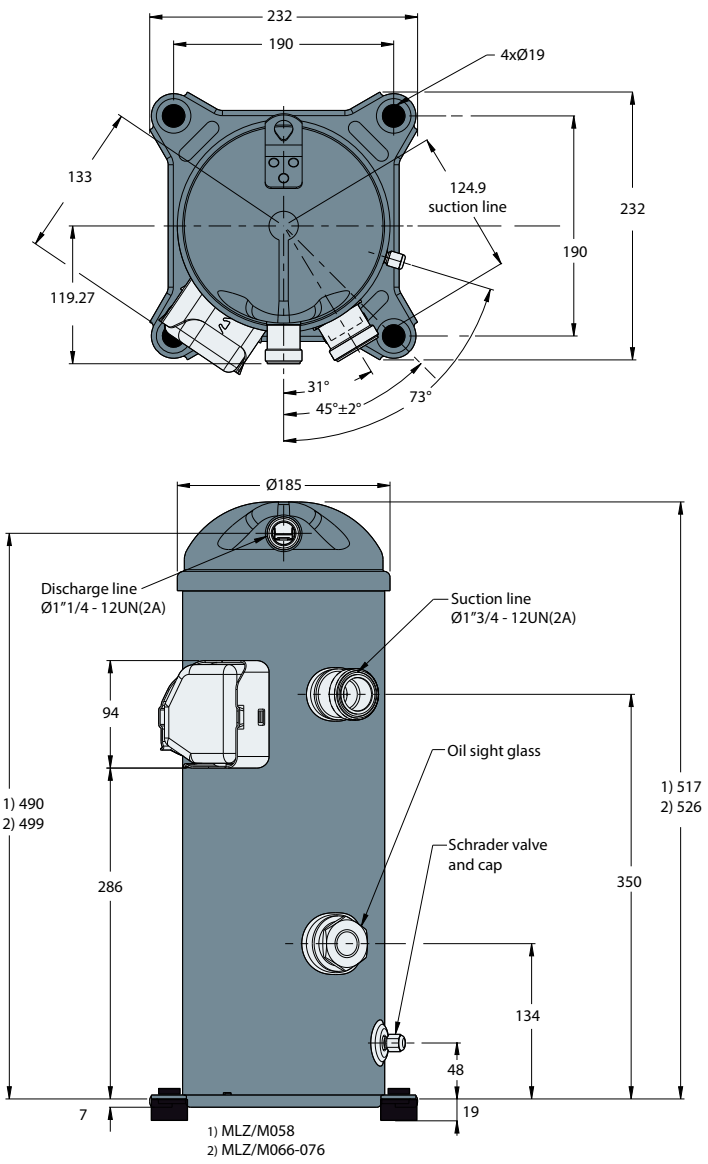

1) MLZ/M058
2) MLZ/M066-076

All dimensions in mm

Terminal box C & Q (screw terminals)

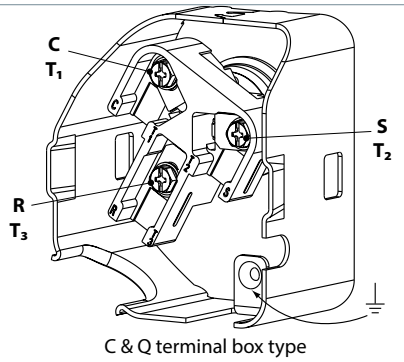

C & Q terminal box type

Mounting grommet

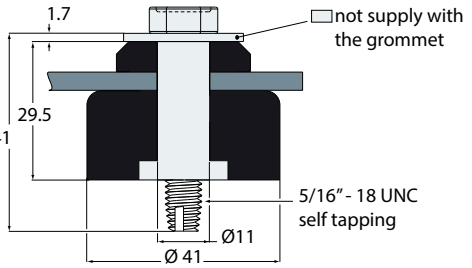

Recommended torque for mounting bolts:
11 Nm (±1 Nm)

Refer to section "Ordering information and packaging" for overview of shipped mounting accessories

Oil sight glass

MLZ / MLM scroll compressors come equipped with a threaded oil sight glass with 1"1/8 - 18 UNEF connection. It can be used for a visual check of the oil amount and condition or it may be replaced by an accessory oil management device. The oil level must be visible in the sight glass during operation.
Torque requirement= 52.5 ±2.5Nm

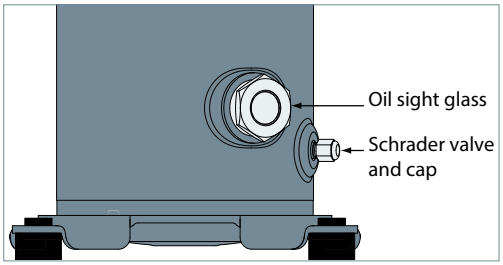

Schrader

The oil fill and drain connection and gauge port is a 1/4" male flare connector incorporating a schrader valve.
Torque requirements:
Schrader valve core: 0.6 ±0.2 Nm
Schrader valve cover: 14.5 ±1Nm

Suction and discharge connections

MLZ / MLM scroll compressors are factory delivered with brazed connections only.

Dedicated rotolock adaptors and adaptor sets are available as accessory.

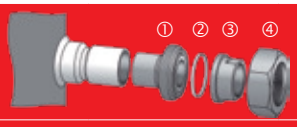



Compressor models	Brazed connection size		Rotolock adaptor set (①adaptor, ②gasket, ③sleeve, ④nut)			Rotolock adaptor (① adaptor only)
			Rotolock	Solder sleeve ODF	Code Number	Code Number
MLZ/MLM 015-019-021-026	Suction	3/4"	1-1/4"	3/4"	120Z0126	120Z0366
	Discharge	1/2"	1"	1/2"		120Z0365
MLZ/MLM 030-038-042-045	Suction	7/8"	1-1/4"	7/8"	120Z0127	120Z0367
	Discharge	1/2"	1"	1/2"		120Z0365
MLZ/MLM 048	Suction	7/8"	1-1/4"	7/8"	120Z0128	120Z0367
	Discharge	3/4"	1-1/4"	3/4"		120Z0366
MLZ/MLM 058-066-076	Suction	1-1/8"	1-3/4"	1-1/8"	120Z0129	120Z0364
	Discharge	7/8"	1-1/4"	7/8"		120Z0367

Tightening torque for rotolock connection: 90Nm ±20

Motor voltage

MLZ/MLM scroll compressors are available in 6 different motor voltages.

	Motor voltage code 1	Motor voltage code 2	Motor voltage code 4	Motor voltage code 5	Motor voltage code 7	Motor voltage code 9
Nominal voltage 50 Hz	-	200-220 V - 3 ph	380-415 V - 3 ph	220-240 V - 1 ph	-	-
Voltage range 50 Hz	-	180 - 242 V	342 - 457 V	198 - 264 V	-	-
Nominal voltage 60 Hz	208-230 V - 1 ph	208-230 V - 3 ph	460 V - 3 ph	-	575 V - 3 ph	380 V - 3 ph
Voltage range 60 Hz	187 - 253 V	187 - 253 V	414 - 506 V	-	517 - 632 V	342 - 418 V

Wiring connections

MLZ/MLM scroll compressors will only compress gas while rotating counter-clockwise (when viewed from the compressor top). Since single-phase motors will start and run in only one direction, reverse rotation is not a major consideration. Three-phase motors, however, will start and run in either direction, depending on the phase angles of the supplied power. Care must be taken during installation to ensure that the compressor operates in the correct direction (see "Phase sequence and reverse rotation protection").

The drawings below show electrical terminal labelling and should be used as a reference when wiring the compressor. For three phase applications, the terminals are labelled T1, T2, and T3. For single-phase applications the terminals are labelled C (common), S (start), and R (run).

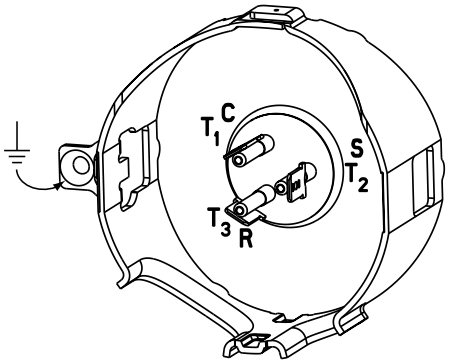

P & T terminal box type

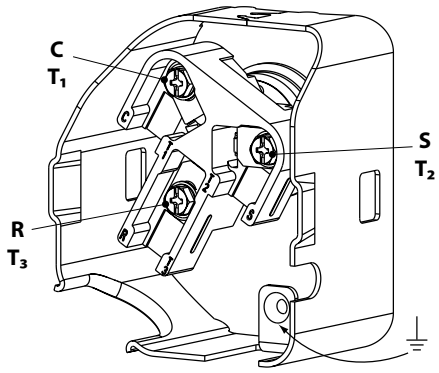

C & Q terminal box type

Terminal cover mounting

The terminal cover and gasket should be installed prior to operation of the compressor. Respect the "up" marking on gasket and cover and ensure that the two outside tabs of the cover engage the terminal box.

Terminal cover removal

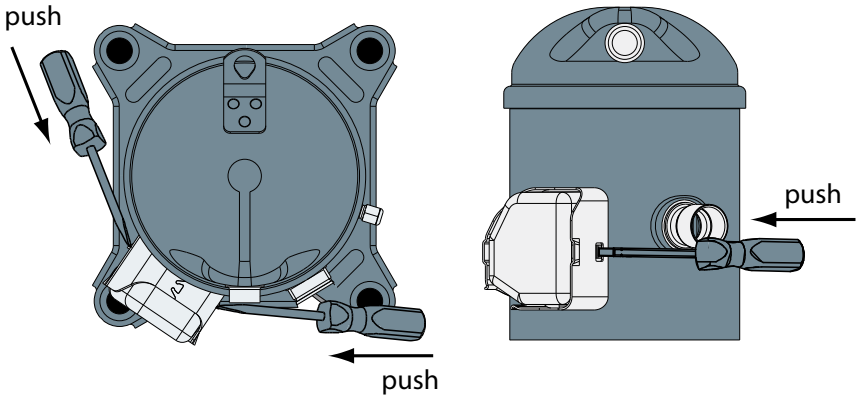

IP rating

The compressor terminal box IP rating according to CEI 529 is **IP22** for all models. IP ratings is only valid when correctly sized cable glands of the IP rating is applied.

- First numeral, level of protection against contact and foreign objects
  2 protection against object size over 12.5 mm (fingers of similar)
- Second numeral, level of protection against water
  2 protection against dripping water when tilted up to 15°

The IP rating can be upgraded to IP54 with accessory kit (see section Spare parts & Accessories).

Three phase electrical characteristics

Compressor model		LRA	MCC	Max Oper A	Winding resistance (Ohm)		
		A	A	A	T1-T3	T1-T2	T2-T3
Motor voltage code 2 200-220 V / 3 ph / 50 Hz 208-230 V / 3 ph / 60 Hz	MLZ/MLM015T2	60	14.5	9.9	1.23	1.67	1.67
	MLZ/MLM019T2	95	17.5	13.3	0.87	1.18	1.18
	MLZ/MLM021T2	95	17.5	13.6	0.87	1.18	1.18
	MLZ/MLM026T2	95	22.0	16.6	0.87	1.18	1.18
	MLZ/MLM030T2	120	26.0	19.7	0.67	0.67	0.68
	MLZ/MLM038T2	123	26.0	23.5	0.60	0.60	0.61
	MLZ/MLM045T2	170	30.0	28.2	0.48	0.46	0.48
	MLZ/MLM048T2	190	37.0	30.6	0.43	0.44	0.43
	MLZ/MLM058T2	190	40.0	36.1	0.37	0.37	0.37
	MLZ/MLM066T2	235	46.0	40.7	0.32	0.32	0.33
	MLZ/MLM076T2	235	50.0	47.6	0.32	0.32	0.33
Motor voltage code 4 380-415 V / 3ph / 50 Hz 460 V / 3 ph / 60 Hz	MLZ/MLM015T4	30	7.0	4.9	5.0	6.7	6.7
	MLZ/MLM019T4	45	9.5	6.7	3.4	4.7	4.7
	MLZ/MLM021T4	45	9.5	6.8	3.4	4.7	4.7
	MLZ/MLM026T4	45	11.0	8.3	3.4	4.7	4.7
	MLZ/MLM030T4	60	13.0	9.8	2.6	2.6	2.6
	MLZ/MLM038T4	70	15.0	11.7	2.3	2.3	2.4
	MLZ/MLM045T4	82	15.0	14.1	1.9	1.9	1.8
	MLZ/MLM048T4	87	16.0	15.3	1.7	1.7	1.7
	MLZ/MLM058T4	95	20.0	18.1	1.4	1.4	1.4
	MLZ/MLM066T4	110	24.0	20.3	1.3	1.3	1.3
	MLZ/MLM076T4	140	25.0	23.9	1.1	1.1	1.1
Motor voltage code 7 575 V / 3ph / 60 Hz	MLZ/MLM015T7	26	5.5	4.0	7.8	10.6	10.6
	MLZ/MLM019T7	38	7.0	5.4	5.4	7.3	7.3
	MLZ/MLM021T7	38	8.0	5.5	5.4	7.3	7.3
	MLZ/MLM026T7	38	9.0	6.0	5.4	7.3	7.3
	MLZ/MLM030T7	42	9.0	7.8	4.4	4.5	4.4
	MLZ/MLM038T7	53	11.5	9.4	4.0	3.9	4.0
	MLZ/MLM045T7	64	11.5	11.3	2.8	2.9	2.9
	MLZ/MLM048T7	67	14	12.3	2.6	2.6	2.5
	MLZ/MLM058T7	75	16	14.4	2.3	2.3	2.3
	MLZ/MLM066T7	95	17	16.3	2.0	2.0	2.0
	MLZ/MLM076T7	100	20	19.1	1.7	1.7	1.7
Motor voltage code 9 380 V / 3ph / 60 Hz	MLZ/MLM015T9	40	7.5	6.0	3.2	4.4	4.4
	MLZ/MLM019T9	52	11.5	8.1	2.2	3.0	3.0
	MLZ/MLM021T9	52	12	8.3	2.2	3.0	3.0
	MLZ/MLM026T9	52	12.5	10.1	2.2	3.0	3.0
	MLZ/MLM030T9	81	14	11.8	1.5	1.5	1.5
	MLZ/MLM038T9	81	17	14.2	1.5	1.5	1.5
	MLZ/MLM045T9	96	20	17.0	1.3	1.3	1.3
	MLZ/MLM048T9	110	19	18.5	1.1	1.1	1.1
	MLZ/MLM058T9	135	25	21.9	0.91	0.93	0.93
	MLZ/MLM066T9	135	28	24.6	0.88	0.89	0.87
	MLZ/MLM076T9	135	28	28.9	0.88	0.89	0.87

Single phase electrical characteristics

Compressor model		LRA	MCC	Max.Oper.A	Winding resistance (Ω)	
		A	A	A	Run	Start
Motor code 5 220-240 V / 1 ph / 50 Hz	MLZ/MLM015T5	60	19.0	13.8	1.02	1.60
	MLZ/MLM019T5	97	23.0	18.3	0.69	1.51
	MLZ/MLM021T5	97	25.0	19.5	0.69	1.51
	MLZ/MLM026T5	97	26.0	24.2	0.69	1.51
	MLZ/MLM030T5	127	32.0	28.9	0.42	1.31
	MLZ/MLM038T5	130	38.0	33.9	0.39	1.02
	MLZ/MLM042T5	130	40.0	37.1	0.39	1.02
Motor code 1 208-230 V / 1 ph / 60 Hz	MLZ/MLM015T1	69	19.0	13.8	0.84	1.70
	MLZ/MLM019T1	97	25.0	19.9	0.67	1.57
	MLZ/MLM021T1	97	24.5	21.4	0.67	1.57
	MLZ/MLM026T1	115	31.5	26.8	0.55	1.47
	MLZ/MLM030T1	150	38.0	31.9	0.34	0.90
	MLZ/MLM038T1	160	45.0	37.2	0.28	1.76
	MLZ/MLM042T1	189	60.0	46.6	0.23	0.69

LRA (Locked Rotor Amp)

LRA is the higher average current as measured on a mechanically blocked compressor tested under nominal voltage. LRA is printed on the nameplate.

The LRA value can be used as a rough estimation for the starting current. However in most cases, the real starting current will be lower. Many countries have defined limits for the starting current in domestic use. A soft starter can be applied to reduce starting current.

MCC (Maximum Continuous Current)

The MCC is the current at which the internal motor protection trips under maximum load and low voltage conditions.

This MCC value is the maximum at which the compressor can be operated in transient conditions and out of the application envelope. Above this value the overload will switch off to protect the motor.

Max Oper. A (Maximum Operating Amp)

The Max Oper. A is the current when the compressor operates at maximum load conditions and 10% below nominal voltage.

This value which is the max rated load current for the compressor is new on the nameplate.

Max Oper. A can be used to select cables and contactors.

In normal operation, the compressor current consumption is always less than the Max Oper. A value.

Winding resistance

Winding resistance is the resistance between indicated terminal pins at 25°C (resistance value +/- 7%).
Winding resistance is generally low and it requires adapted tools for precise measurement. Use a digital ohm-meter, a '4 wires' method and measure under stabilised ambient temperature. Winding resistance varies strongly with winding temperature ; If the compressor is stabilised at a different value than 25°C, the measured resistance must be corrected with following formula:

$$R_{tamb} = R_{25°C} \quad \frac{a + t_{amb}}{a + t_{25°C}}$$

$t_{25°C}$: reference temperature = 25°C

t_{amb}: temperature during measurement (°C)

$R_{25°C}$: winding resistance at 25°C

R_{amb}: winding resistance at t_{amb}

coefficient a= 234.5

Electrical connections

MLZ / MLM single phase scroll compressors are designed to operate without any assistance. If starting within the defined voltage range, PSC wiring is sufficient.

PSC wiring

PSC wiring with a run capacitor only is the default wiring solution for single phase MLZ and MLM compressors.

The start winding (C-S) of the motor remains in circuit through a permanent (run) capacitor. This permanent (run) capacitor is connected between the start winding (S) and the run winding (R).

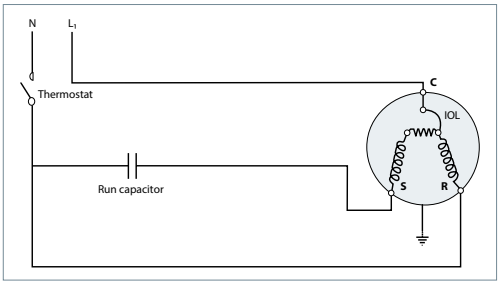

PTCSCR wiring

If the starting torque of the PSC wiring is not sufficient due to pressures not fully equalized during the off-cycle or some voltage drop during starting, the PTCSCR wiring might be an option. PTCSRC wiring provides more motor torque than PSC wiring but less than CSR wiring. The PTC is wired in parallel to the run capacitor.

When starting the compressor, the PTC, which is at low resistance, provides additional starting current to the motor's start winding. The current passing through the PTC causes it to heat up and, at a certain temperature, change to a very high resistance. At this time the motor is up to nominal speed and the run capacitor determines the current through the start winding. The PTC

remains at high temperature and thus at high resistance as long as power is connected to the compressor. When the compressor is switched off, the PTC cools down to its initial low resistance and becomes available to support the next compressor start.
It is important to provide sufficient time between motor starts to allow the PTC to cool down close to ambient temperature. Depending on the ambient conditions and the cooling of the PTC, this may take about 5 minutes. A restart before the PTC is back to low resistance may be successful or the motor may stall in a locked-rotor state depending on the ambient and system's conditions. A locked-rotor state causes the internal protector to open and would cause even further delay until the overload is reset.

The following PTC types are recommended for the MLZ/MLM single phase compressors:

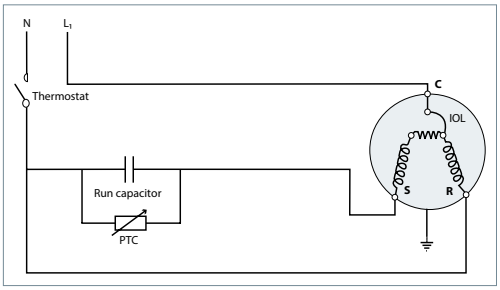

Model	Voltage code 1 208-230 V/1~/60 Hz	Voltage code 5 220-240 V/1~/50 Hz
MLZ/MLM015	305C12*	305C9* / 305C11*
MLZ/MLM019	305C9* / 305C11*	305C9* / 305C11*
MLZ/MLM021	305C9* / 305C11*	305C9* / 305C11*
MLZ/MLM026	305C12*	305C9* / 305C11*
MLZ/MLM030	305C9* / 305C11*	305C9* / 305C11*
MLZ/MLM038	305C9* / 305C11*	305C9* / 305C11*
MLZ/MLM042	305C9* / 305C11*	305C9* / 305C11*

Note: MLZ compressors with PTCSCR are not approved by UL. It is the customers' responsibility to get final approval for the system when required.

CSR wiring

CSR wiring provides additional motor torque at start-up, by the use of a start capacitor in combination with the run capacitor. The start capacitor is only connected during the starting operation, a potential relay is used to disconnect it after the start sequence.

Some applications with high differential pressure and start duty as "soft serve ice cream machine" can require CSR wiring. This configuration can also be used to reduce erratic starting at unfavourable conditions such as very low ambient temperature or weak voltage.

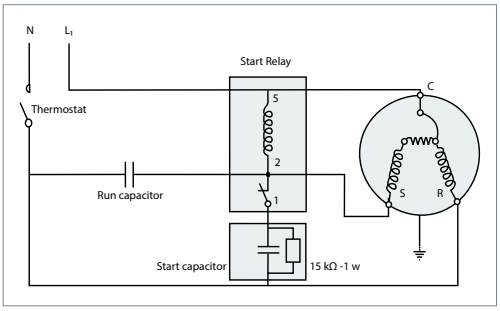

Nominal capacitor value and relays

	Compressor models	Default solution: PSC wiring with run capacitor only	Additionnal components for CSR wiring		
		PSC wiring	CSR wiring		
		Run capacitor	Start capacitor	Relay	
		µF	µF	Reference	
220-240 V /1/50 Hz Motor voltage code 5	MLZ/MLM015	40	145-175	3ARR3*3AL*	RVA9CKL
	MLZ/MLM019-021-026	70	145-175	3ARR3*3AL*	RVA9CKL
	MLZ/MLM030	50	161-193	3ARR3*24AP*	RVA3EKL
	MLZ/MLM038-042	55	88-108	3ARR3*25AS*	RVA4GKL
208-230 V / 1 / 60 Hz Motor voltage code 1 not provided with the compressor	MLZ/MLM015	45	145-175	3ARR3*3M*	RVA2ACKL
	MLZ/MLM019-021	45	145-175	3ARR3*3M*	RVA2ACKL
	MLZ/MLM026	60	88-108	3ARR3*3L*	RVA2ABKL
	MLZ/MLM030	70	161-193	3ARR3*3L*	RVA2ABKL
	MLZ/MLM038	55	88-108	3ARR3*25AS*	RVAA4IKL
	MLZ/MLM042	80	189-227	3ARR3*3L*	RVA2ABKL

Three phase

Suggested wiring diagram with "one shot" pump down cycle and safety lock-out relay

Control device..... TH
Optional short cycle timer (3 min) ..... 180 s
Control relay ..... KA
Liquid Line Solenoid valve.....LLSV
Compressor contactor..... KM
Phase monitor ..... PM
Safety lock out relay.....KS
Pump-down control low pressure switch ..LP
High pressure safety switch..... HPs
Fused disconnect Q1
Fuses F1
Compressor motor .....M
Discharge gas thermostat..... DGT

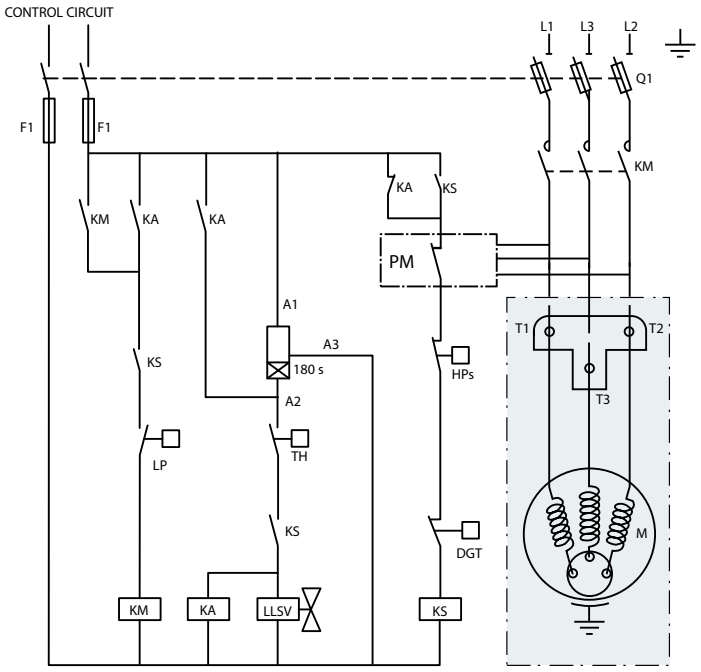

Wiring diagram with pump-down cycle

Internal motor protection

MLZ/MLM scroll compressors are equipped with an internal line break protector mounted on the motor windings. The protector is an automatic reset device, containing a snap action bimetal switch.

Internal protectors respond to over-current and overheating. They are designed to interrupt motor current under a variety of fault conditions, such as failure to start, running overload, and fan failure.

If the internal overload protector trips out, it must cool down to about 60°C to reset. Depending on ambient temperature, this may take up to several hours.

Phase sequence and reverse rotation protection

The compressor will only operate properly in a single direction. Use a phase meter to establish the phase orders and connect line phases L1, L2 and L3 to terminals T1, T2 and T3, respectively. For three-phase compressors, the motor will run equally well in both directions. Reverse rotation results in excessive noise; no pressure differential between suction and discharge; and suction line warming rather than immediate cooling.
A service technician should be present at initial start-up to verify that supply power is properly phased and that compressor and auxiliaries are rotating in the correct direction.

MLZ/MLM015-038 scroll compressors are designed to operate for a maximum of 150 hours in reverse, but as a reverse rotation situation can go unnoticed for longer periods, phase monitors are recommended.

For compressors MLZ/MLM048 and larger, phase monitors are required. The selected phase monitor should lock out the compressor from operation in reverse.

At brief power interruptions, reverse rotation can occur with single phase compressors. In this case the internal protector will stop the compressor. It will have to cool down and will restart safely afterwards.

Voltage imbalance

For three-phase applications the voltage measured at the compressor terminals for each phase should be within ± 2% of the average for all phases.

Approvals and certificates

MLZ scroll compressors comply with the following approvals and certificates.

Certificates are listed on the product datasheets: http://www.danfoss.com/odsg

CE (European Directive)	All MLZ models
UL (Underwriters Laboratories)	Models with motor code 1, 5 except when using PTCSCR system
Other approvals / certificates	Contact Danfoss

Conformity to directives

Pressure equipment directive 2014/68/EU
Machinery directive 2006/42/EC

Low voltage directive 2014/35/EU

Products	MLZ / MLM 015 to 076
Refrigerating fluids	Group 2
Category PED	I
Evaluation module	no scope
Service temperature - Ts	-35°C < Ts < 55°c
MLZ - Service pressure - Ps	25.44 bar(g)
MLM - Service pressure - Ps	20.74 bar(g)
Declaration of conformity	contact Danfoss
Marking of conformity	CE

Internal free volume

Products	Internal free volume at LP side without oil (litre)
MLZ/MLM 015 - 026	1.85
MLZ/MLM 030-048	1.85
MLZ/MLM 058-076	6.15

The scroll compressor application range is influenced by several parameters which need to be monitored for a safe and reliable operation. These parameters and the main recommendations for good practice and safety devices are explained hereunder.

- **Refrigerant and lubricants**
- **Motor supply**
- **Compressor ambient temperature**
- **Application envelope** (evaporating temperature, condensing temperature, return gas temperature)

Refrigerant and lubricants

General information

When choosing a refrigerant, different aspects must be taken into consideration:
- Legislation (now and in the future)
- Safety
- Application envelope in relation to expected running conditions
- Compressor capacity and efficiency
- Compressor manufacturer recommendations & guidelines

Additional points could influence the final choice:
- Environmental considerations
- Standardisation of refrigerants and lubricants
- Refrigerant cost
- Refrigerant availability

R22

R22 is an HCFC refrigerant and is still a wide use today. It has a low ODP (Ozone Depletion Potential) and therefore it will be phased out in the future. Check local legislation.

When R22 is applied in refrigeration applications it can lead to high discharge temperature. Carefully check all other parameters that can influence the discharge temperature.

R134a

Refrigerant R134a is an HFC refrigerant. R134a has zero ozone depletion potential (ODP = 0) and is commonly accepted as the best R12 alternative. R134a is a pure refrigerant and

has zero temperature glide. For applications with high evaporating and high condensing temperatures, R134a is the ideal choice.

R404A

R404A is an HFC refrigerant. R404A has zero ozone depletion potential (ODP = 0). R404A is especially suitable for low evaporating temperature applications but it can also be applied to medium evaporating temperature applications. R404A is a mixture and has a very

small temperature glide, and therefore must be charged in its liquid phase, but for most other aspects this small glide can be neglected. Because of the small glide, R404A is often called a near-azeotropic mixture.

R507

R507 is an HFC refrigerant with properties comparable to R404A. R507 has no ozone depletion potential (ODP = 0). As with R404A, R507 is particularly suitable for low evaporating

temperature applications but it can also be used for medium evaporating temperature applications. R507 is an azeotropic mixture with no temperature glide.

R407A & R407F

R407A and R407F are two HFC refrigerants with similar properties. Both have a GWP below2200 and comply with the EU F-gas regulation. They

can be used as alternatives to R404A and R507 refrigerants in MBP applications.

Designation	Composition	ODP	GWP	Safety group	Boiling temp °C	Temp glide °C	Critical temp °C	Critical pressure bar	Cond temp @ 26babs
R404A	52% R143a - 44% R125 - 4% R134a	0	3900	A1	-47	0.8	71.6	37.3	55
R507	50% R143a - 50% R125	0	4000	A1	-46.7	0	71	37.15	54
R407A	40% R134a - 40% R125 - 20% R32	0	2107	A1	-45.1	6.42	82	45.15	58.5
R407F	40% R134a - 30% R125 - 30% R32	0	1824	A1	-46	6.4	83	47.5	56.7

Zeotropic refrigerant mixtures

R407A / R407F are zeotropic mixture (like R407C). The composition of vapour and liquid changes during the phase transition. The composition change causes phase shift and temperature glide.

Phase shift

In system components where both vapour and liquid phases are present (evaporator, condenser, liquid receiver), the liquid phase and vapour phase do not have the same composition. In fact both phases form two different refrigerants.

Therefore zeotropic refrigerants need some special attention. Zeotropic refrigerants must always be charged in liquid phase. Flooded evaporators should not be applied in systems with zeotropic refrigerants.

Temperature glide

During the evaporating and the condensing process at constant pressure, the refrigerant temperature will decrease in the condenser and rise in the evaporator. Therefore when speaking about evaporating and condensing temperatures, it is important to indicate whether this is a dew point temperature or a mid point value. In the figure below, the dotted lines are lines of constant temperature.

They do not correspond to the lines of constant pressure.

Points A and B are dew point values. These are temperatures on the saturated vapour line.

Points C and D are mid point values. These are temperatures which correspond more or less with the average temperature during the evaporating and condensing process.

For the same R407A/F cycle, mid point temperatures are typically about 2°C lower than dew point temperatures. According to EN12900 recommendations, Danfoss Commercial Compressors use dew point temperatures for selection tables and application envelopes etc.

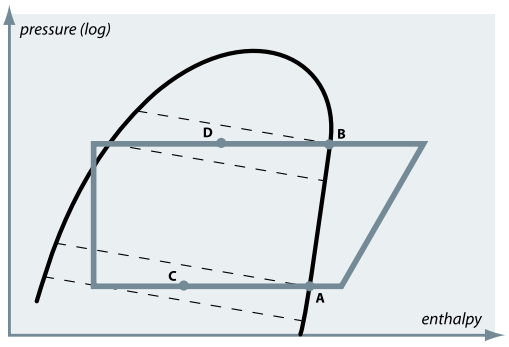

PVE

Polyvinyl ether (PVE) is an innovative refrigeration lubricant for HFC refrigerant systems. PVE is as hygroscopic as existing polyolester lubricants (POE), but PVE doesn't chemically react with water; no acids are formed and compressor evacuation is easier.
As PVE can be mixed with POE, oil top up can be done with up to 25% POE.

The compressor technology applied in MLZ compressors in combination with PVE lubricant provides the best possible result in terms of reliability and compressor lifetime.
The PVE lubricant is compatible with R22 which makes the MLZ compressors a very versatile multi- refrigerant solution. Very high care has to be taken for vacuum as PVE is much more hygroscopic than alkylbenzene or mineral oil.

Alkylbenzene oil

Alkylbenzene oil can be applied in systems using HCFC refrigerants (R22). Compared to a mineral oil it provides distinct advantages: excellent miscibility, excellent thermal stability, compatibility with mineral oils and constant quality.

MLM series compressors are charged with Alkylbenzene oil and herewith offer an economically interesting alternative to the MLZ series in regions where R22 is still the predominant refrigerant. Note however that MLM compressors can not be used with HFC refrigerants.

Motor supply

MLZ / MLM scroll compressors can be operated at nominal voltages as indicated in table section "Motor voltage". Under-voltage and over-voltage operation is allowed within the indicated voltage ranges. In case of risk of under-voltage operation, special attention must be paid to current draw and start assist for single-phase compressors may be required.

Compressor ambient temperature

MLZ / MLM compressors can be applied from -35°C to 55°C ambient temperature. The compressors are designed as 100 % suction gas cooled without need for additional fan cooling. Ambient temperature has very little effect on the compressor performance.

High ambient temperature

In case of enclosed fitting and high ambient temperature it's recommend to check the temperature of power wires and conformity to their insulation specification.

In case of safe tripping by the internal compressor overload protection the compressor must cool down to about 60°C before the overload will reset. A high ambient temperature can strongly delay this cool-down process.

Low ambient temperature

Although the compressor itself can withstand low ambient temperature, the system may require specific design features to ensure safe and reliable operation. See section 'Specific application recommendations'.

Application envelope

The operating envelopes for MLZ/MLM scroll compressors are given in the figures below, where the condensing and evaporating temperatures represent the range for steady-state operation. Under transient conditions, such as start-up and defrost, the compressor may operate outside this envelope for short periods. The figures below show the operating envelopes for MLZ compressors with refrigerants R404A/507, R134a and R22. The operating limits serve to define the envelope within which reliable operations of the compressor are guaranteed:

- Maximum discharge gas temperature: +135°C
- A suction superheat below 5 K is not recommended due to the risk of liquid flood back
- Minimum and maximum evaporating and condensing temperatures as per the operating envelopes.

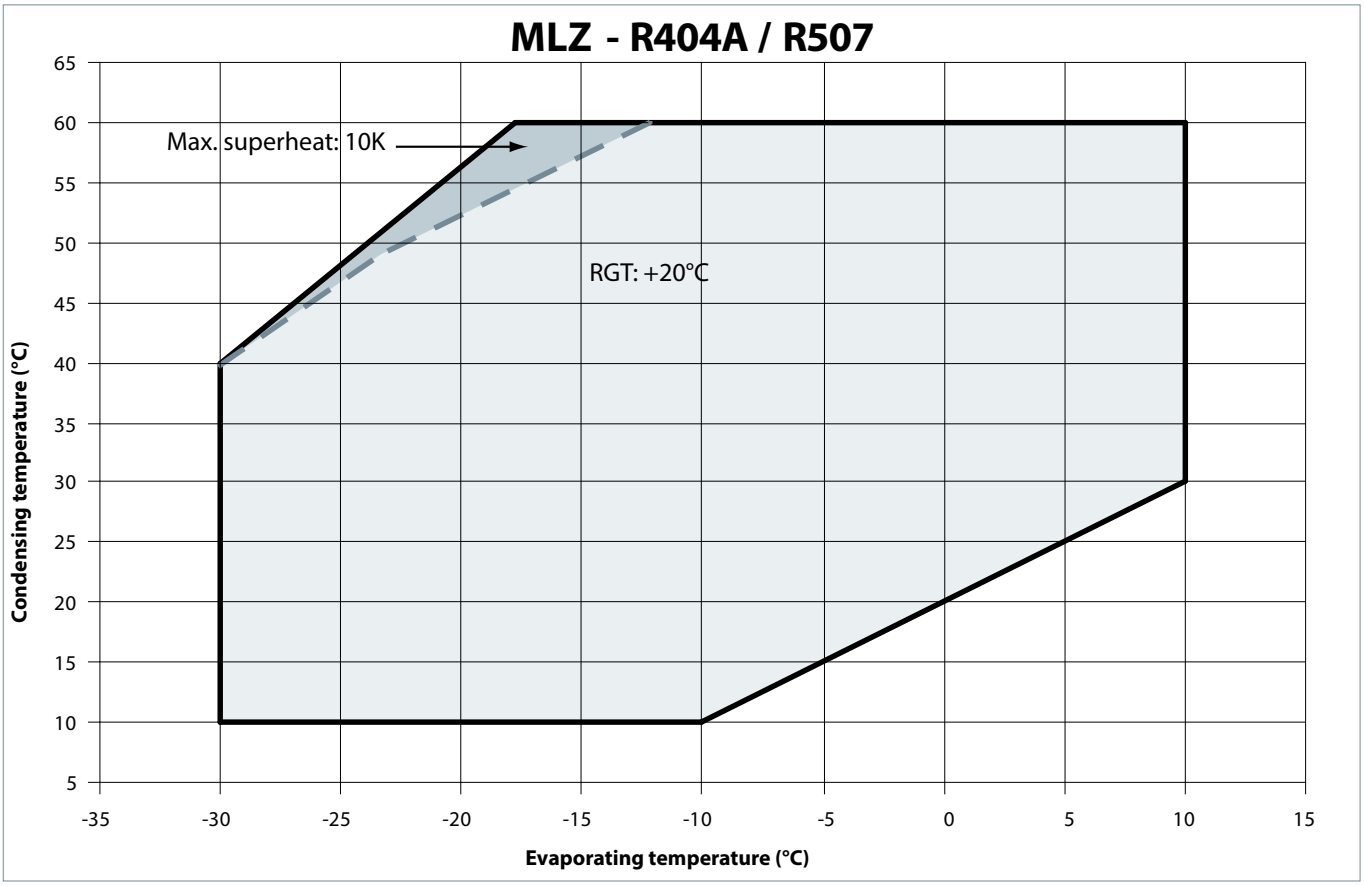

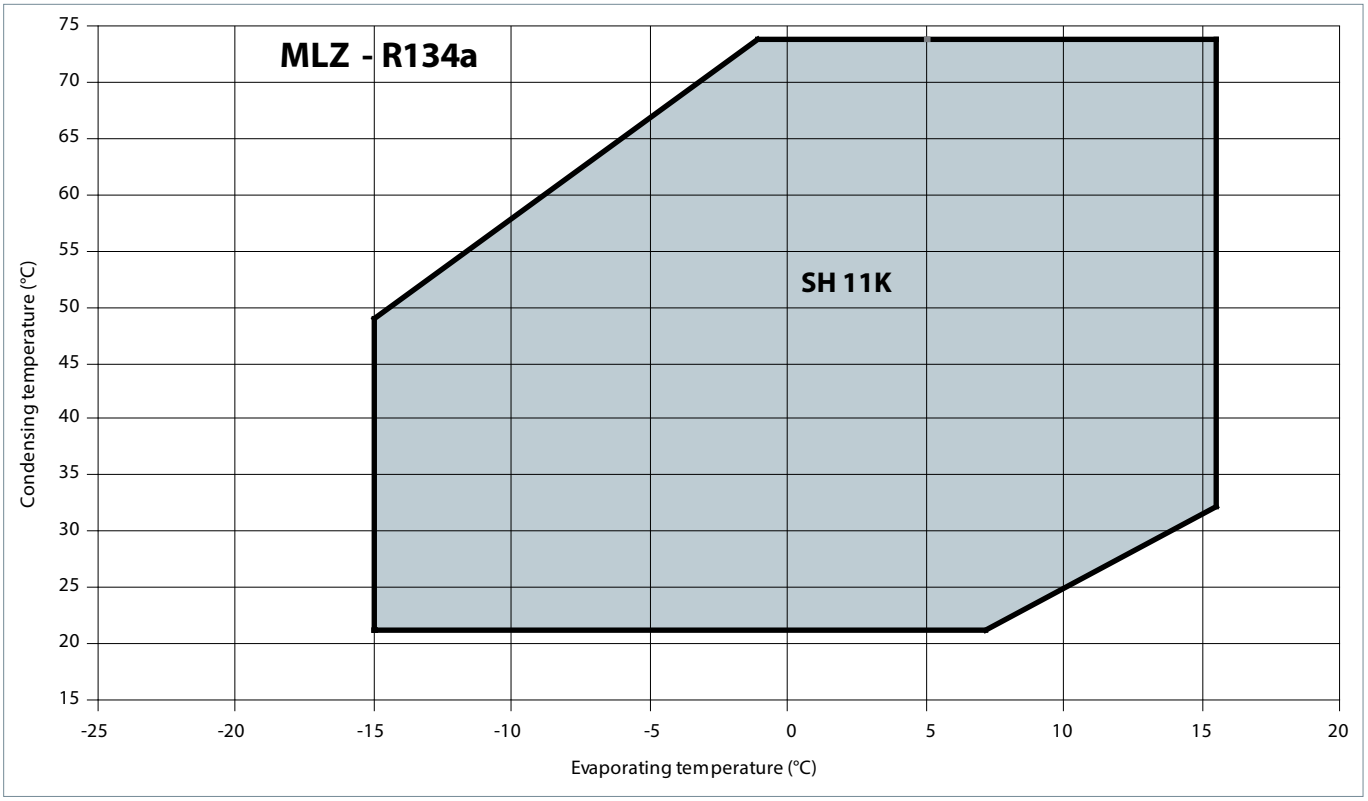
MLZ - R134a
SH 11K
Condensing temperature (°C)
Evaporating temperature (°C)
75
70
65
60
55
50
45
40
35
30
25
20
15
-25
-20
-15
-10
-5
0
5
10
15
20

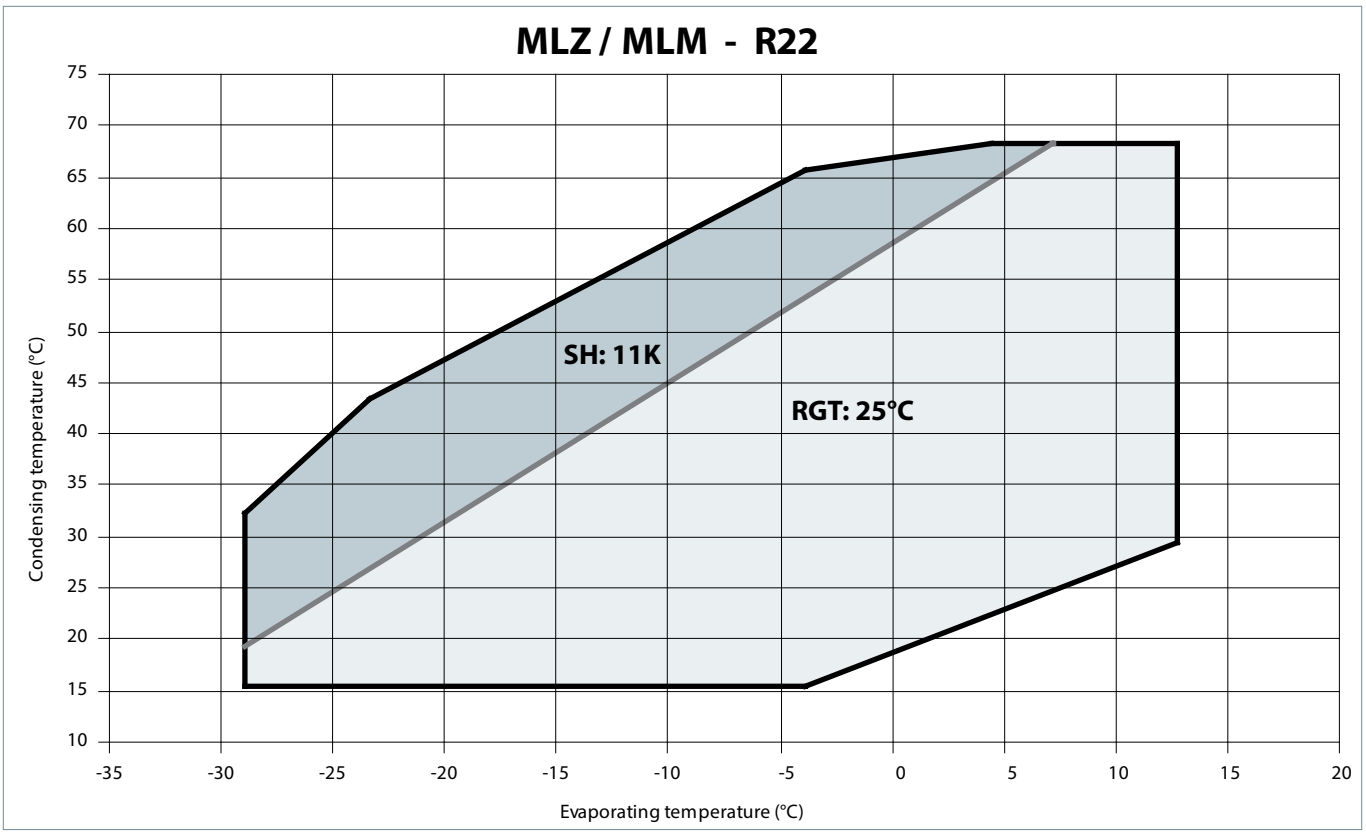
MLZ / MLM - R22
SH: 11K
RGT: 25°C
Condensing temperature (°C)
Evaporating temperature (°C)
75
70
65
60
55
50
45
40
35
30
25
20
15
10
-35
-30
-25
-20
-15
-10
-5
0
5
10
15
20

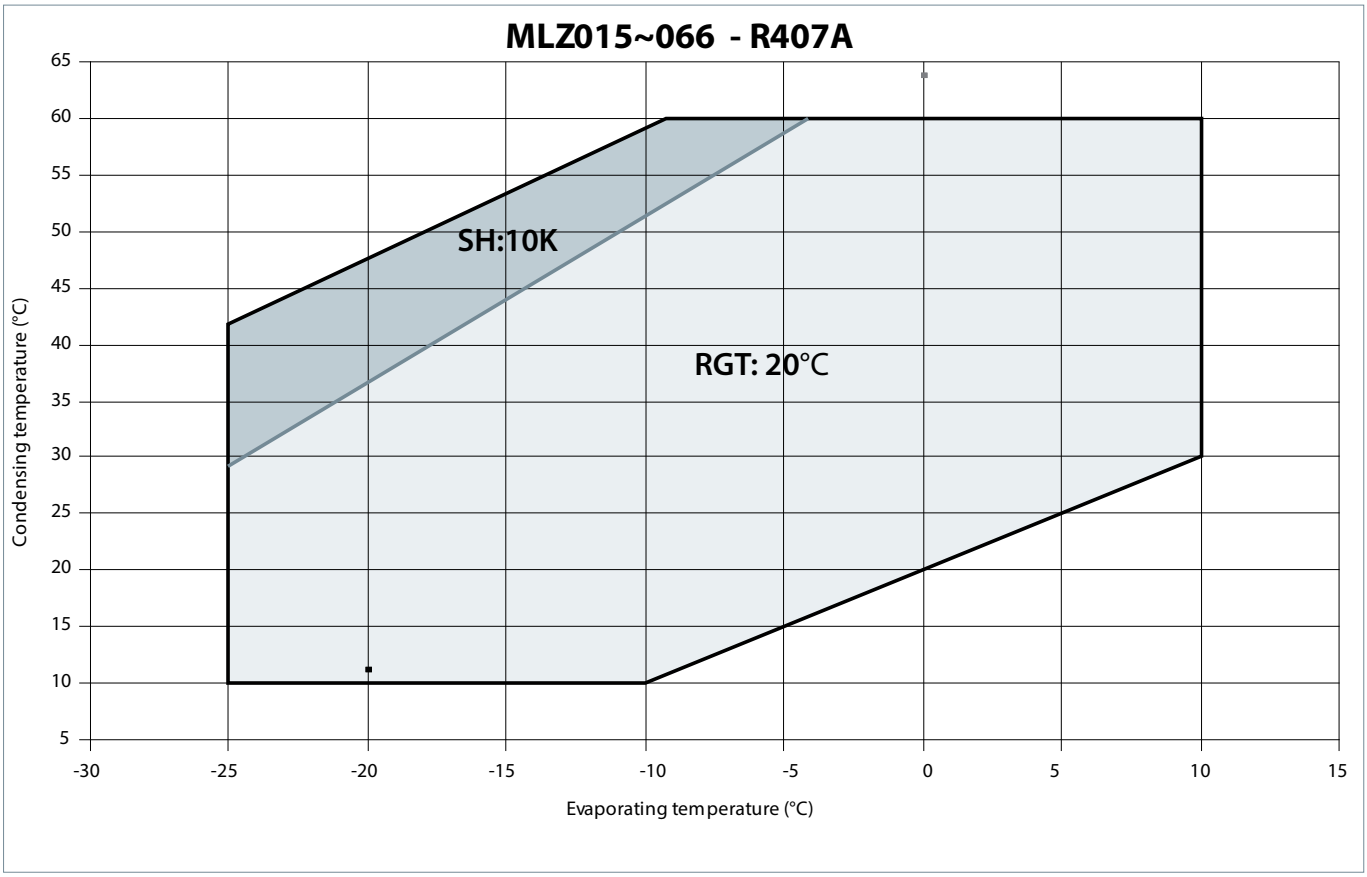
MLZ015~066 - R407A
SH:10K
RGT: 20°C
Condensing temperature (°C)
Evaporating temperature (°C)
65
60
55
50
45
40
35
30
25
20
15
10
5
-30
-25
-20
-15
-10
-5
0
5
10
15

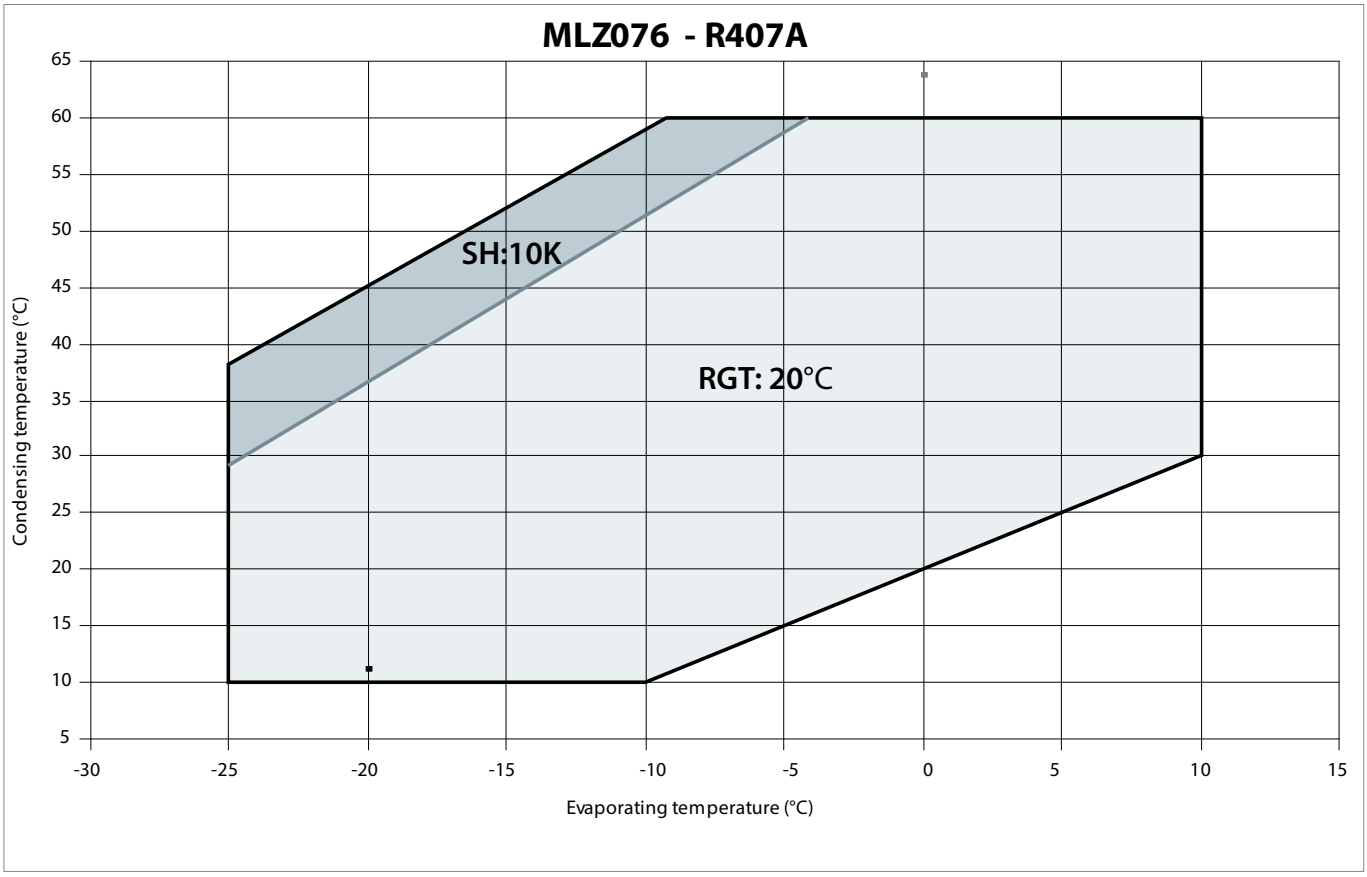
MLZ076 - R407A
SH:10K
RGT: 20°C
Condensing temperature (°C)
Evaporating temperature (°C)
65
60
55
50
45
40
35
30
25
20
15
10
5
-30
-25
-20
-15
-10
-5
0
5
10
15

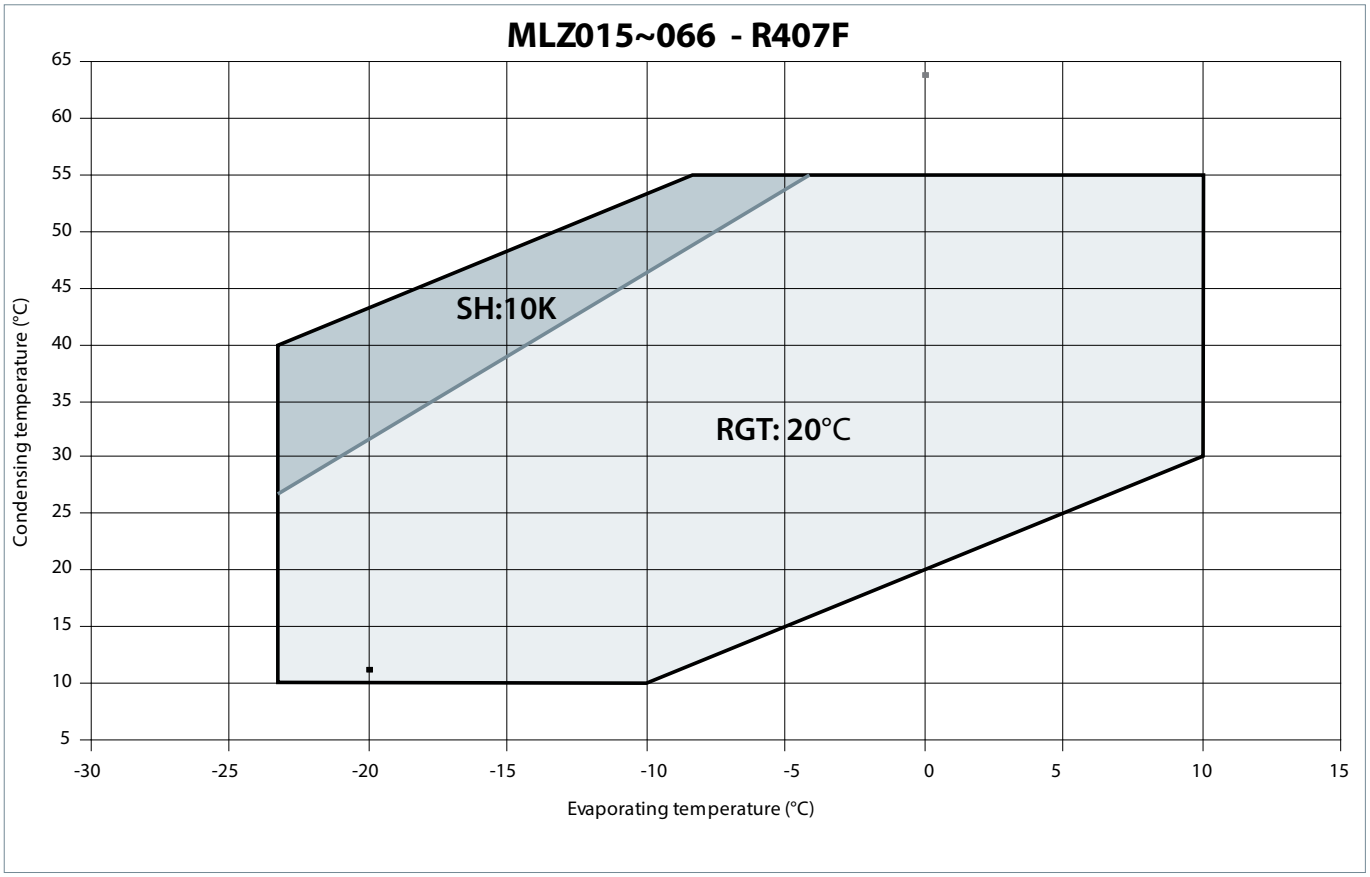
MLZ015~066 - R407F
Condensing temperature (°C)
65
60
55
50
45
40
35
30
25
20
15
10
5
-30
-25
-20
-15
-10
-5
0
5
10
15
Evaporating temperature (°C)
SH:10K
RGT: 20°C

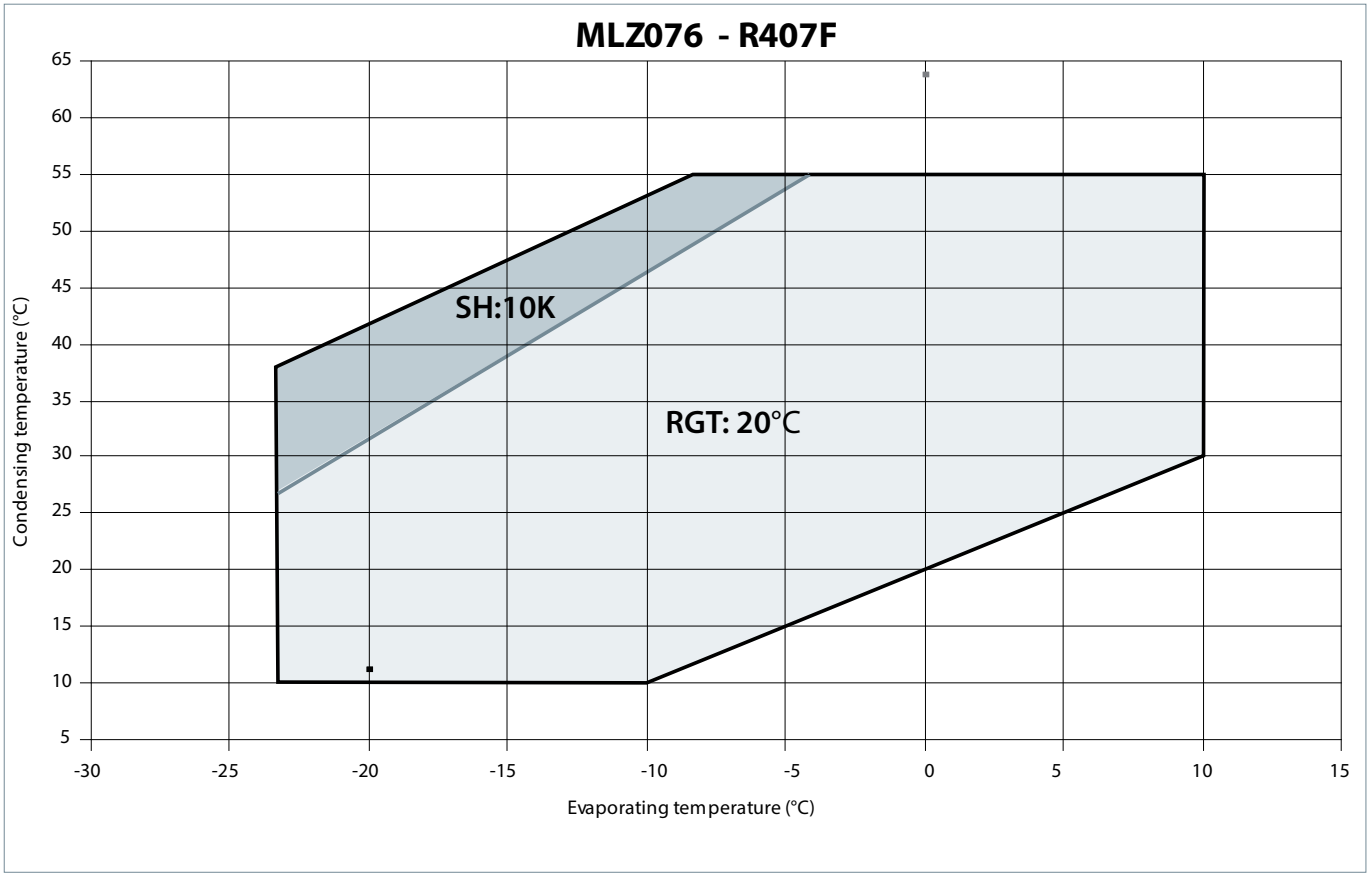
MLZ076 - R407F
Condensing temperature (°C)
65
60
55
50
45
40
35
30
25
20
15
10
5
-30
-25
-20
-15
-10
-5
0
5
10
15
Evaporating temperature (°C)
SH:10K
RGT: 20°C

Maximum discharge gas temperature

The discharge temperature depends mainly on the combination of evaporating temperature, condensing temperature and suction gas superheat. Discharge gas temperature should be controlled with an isolated thermocouple or thermostat attached to the discharge line 15 cm (6 inches) from the compressor shell. Maximum discharge gas temperature must not exceed 135°C (275°F) when the compressor is running within the approved operating envelope.

Discharge gas temperature protection (DGT)

DGT protection is required if the high and low pressure switch settings do not protect the compressor against operations beyond its specific application envelope. Please refer to the examples below, which illustrate where DGT protection is required (n°1) and where it is not (n°2).

The compressor must not be allowed to cycle on the discharge gas thermostat. Continuous operations beyond the compressor's operating range will cause serious damage to the compressor!

A DGT accessory is available from Danfoss: refer to section "Spare parts & accessories".

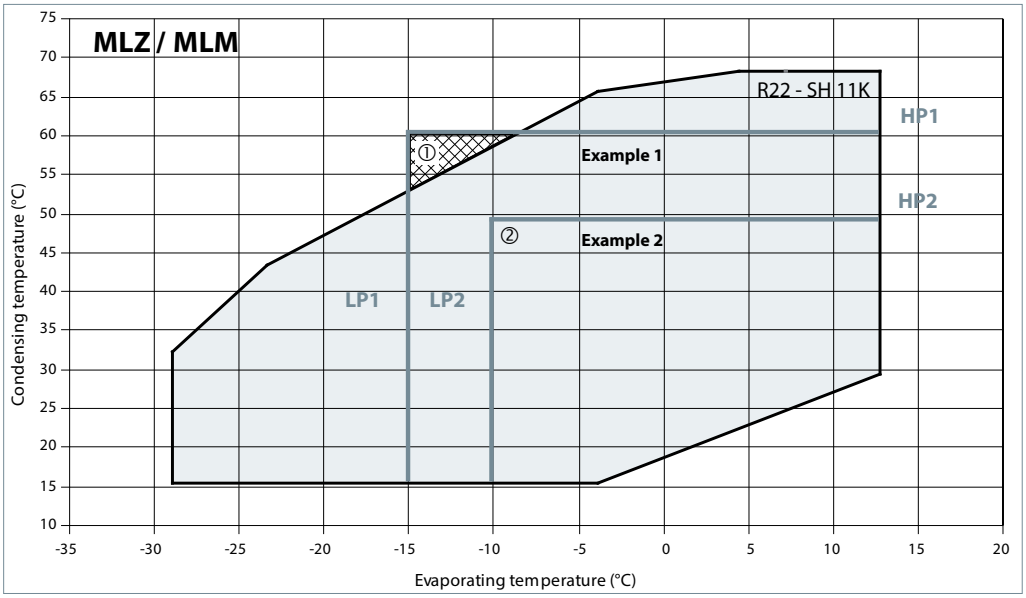

Example 1 (R22, SH = 11 K)
LP switch setting: LP1 = 2 bar (g) (-15°C)
HP switch setting: HP1 = 23.8 bar (g) (61°C)
① The LP and HP switches don't protect sufficiently from operation outside the envelope. A DGT protection is required to avoid operation in the hatched area.

Example 2 (R22, SH = 11 K)
LP switch setting: LP2 = 2.5 bar (g) (-10°C)
HP switch setting: HP2 = 18 bar (g) (49°C)
② The LP and HP switches protect from operation outside the envelope. No DGT protection required.

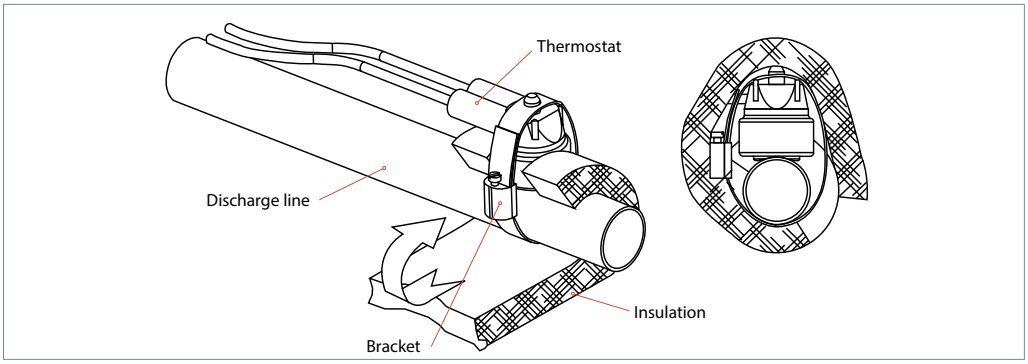

High and low pressure protection

		R22	R404A	R134a	R407A	R407F
Working pressure range high side	bar (g)	7.03 - 27.9	7.20 - 27.7	4.91 - 22.1	6.0 - 25.6	6.3 - 23.9
Working pressure range low side	bar (g)	0.71 - 6.4	1.04 - 7.2	0.64 - 4.0	0.9 - 6.0	1.1 - 6.3
Maximum high pressure safety switch setting	bar (g)	29.8	29.7	23.6	26.8	25.1
Minimum low pressure safety switch setting ①	bar (g)	0.51	0.8	0.45	0.7	0.9
Recommended pump-down switch settings		1.5 bar below nominal evaporating pressure				
Minimum low pressure pump-down switch setting	bar (g)	0.94	1.31	0.85	0.9	1.1
Maximum testing pressure	bar(g)	31				

① LP safety switch shall never have time delay.

High pressure

MLZ/MLM 015-048 scroll compressors are equipped with an internal pressure relief valve (IPRV), for protection against blocked condenser and fan failure conditions (IPRV setting 27-34 bar differential pressure HP / LP). Still, a high pressure (HP) safety switch is recommended.

MLZ/MLM058-068-076 scroll compressors are not equipped with an internal pressure relief valve; therefore a high pressure switch is required to shut down the compressor should the discharge pressure exceed the values shown in the table above.

The high-pressure switch can be set to lower values depending on the application and ambient conditions. The HP switch must either be placed in a lockout circuit or consist of a manual reset device to prevent cycling around the high-pressure limit. If a discharge valve is used, the HP switch must be connected to the service valve gauge port, which must not be isolated.

Low pressure

A low pressure (LP) safety switch is recommended. MLZ/MLM scroll compressors exhibit high volumetric efficiency and may draw very low vacuum levels, which could induce scroll instability and electrical arcing at the internal cluster. The minimum low-pressure safety switch setting is given in the above table. For systems without pump-down, the LP safety switch must either be a manual lockout device or an automatic switch wired into an electrical lockout circuit. The LP switch tolerance must not allow for vacuum operations of the compressor. LP switch settings for pump-down cycles with automatic reset are also listed in the table above.

On/off cycling (cycle rate limit)

Depending on the application, a number higher than 12 starts per hour can reduce the service life of the motor-compressor unit. A one-minute time out is recommended.

The system must be designed in a way that provides a minimum compressor running time of 2 minutes so as to provide for sufficient motor cooling after start-up along with proper oil return. Note that the oil return may vary since it depends upon system design.

Danfoss recommends a restart delay timer to limit compressor cycling.

General

Successful application of scroll compressors is dependent on careful selection of the compressor for the application. If the compressor is not correct for the system, it will operate beyond the limits given in this manual. Poor performance, reduced reliability, or both may result.

Essential piping design considerations

Proper piping practices should be employed to ensure adequate oil return, even under minimum load conditions with special consideration given to the size and slope of the tubing coming from the evaporator. Tubing returns from the evaporator should be designed so as not to trap oil and to prevent oil and refrigerant migration back to the compressor during off-cycles.

If the evaporator lies above the compressor the addition of a pump-down cycle is strongly recommended. If a pump-down cycle were to be omitted, the suction line must have a loop at the evaporator outlet to prevent refrigerant from draining into the compressor during off-cycles.

If the evaporator were situated below the compressor, the suction riser must be trapped to ensure the oil return to the compressor (see fig.1).

When the condenser is mounted at a higher position than the compressor, a suitably sized «U»-shaped trap close to the compressor is necessary to prevent oil leaving the compressor from draining back to the discharge side of the compressor during off cycle. The upper loop also helps avoid condensed liquid refrigerant from draining back to the compressor when stopped (see fig. 2). The maximum elevation difference between the indoor and outdoor section cannot exceed 8 m. System manufacturers should specify precautions for any applications that exceed these limits to ensure compressor reliability.

Piping should be designed with adequate three-dimensional flexibility (figure 2). It should not be in contact with the surrounding structure, unless a proper tubing mount has been installed. This protection proves necessary to avoid excess vibration, which can ultimately result in connection or tube failure due to fatigue or wear from abrasion. Aside from tubing and connection damage, excess vibration may be transmitted to the surrounding structure and generate an unacceptable sound level within that structure as well (for more information on sound and vibration, see the section on: "Sound and vibration management").

fig.1

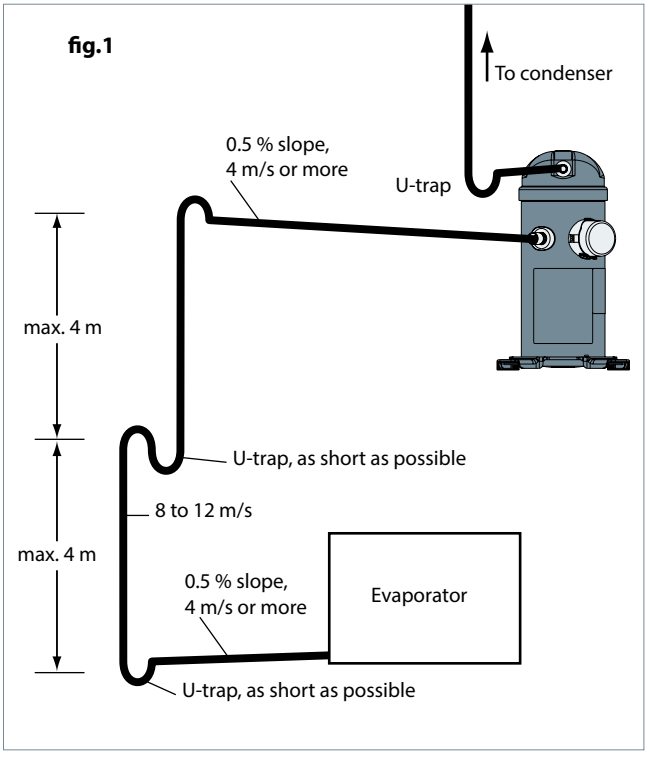

fig. 2

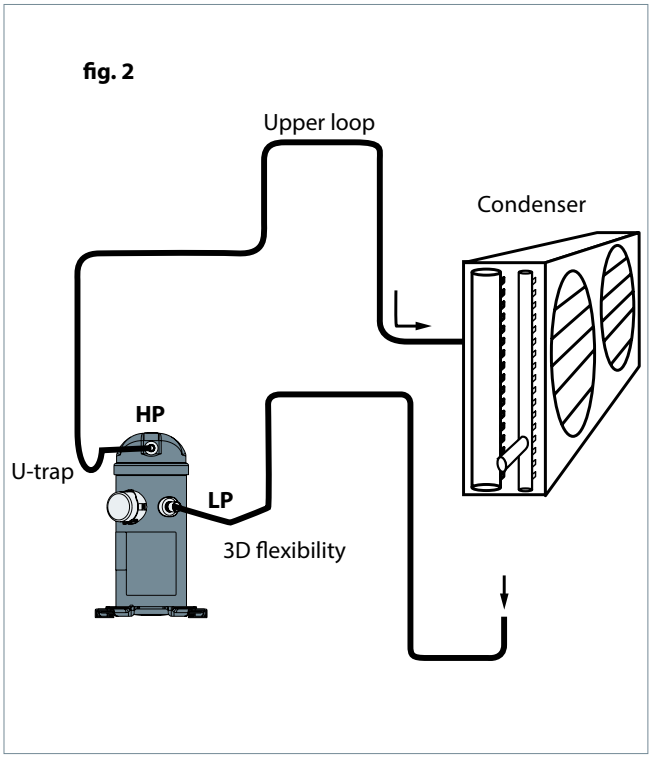

Refrigerant charge limit

MLZ/MLM scroll compressors can tolerate liquid refrigerant up to a certain extend without major problems. However, excessive liquid refrigerant in the compressor is always unfavourable for service life. Besides, the installation cooling capacity may be reduced because of the evaporation taking place in the compressor and/or the suction line instead of the evaporator. System design must be such that the amount of liquid refrigerant in the compressor is limited. In this respect, follow the guidelines given in the section: "essential piping design recommendations" in priority.
Use the tables below to quickly evaluate the required compressor protection in relation with the system charge and the application.
More detailed information can be found in the paragraphs hereafter. Please contact Danfoss for any deviation from these guidelines.

Model	Refrigerant charge limit (kg)
MLZ015-026	3.6
MLZ030-048	5.4
MLZ058-076	7.2

Depending on test results, crankcase heaters, Liquid Line Solenoid Valve, pump down or suction accumulator must be applied see below.

	BELOW charge limit	ABOVE charge limit
Packaged units	✓ No test or additional safeties required	REQ Off cycle migration test REQ Liquid flood back test
System with remote heat exchanger	REC Off cycle migration test	REQ Off cycle migration test REQ Liquid flood back test

REC Recommended REQ Required ✓ No test or additional safeties required

Note: for special conditions such as low ambient temperature, low load operation or brazed plate heat exchangers please refer to corresponding sections

Off-cycle migration

Off-cycle refrigerant migration is likely to occur when the compressor is located at the coldest part of the installation, when the system uses a bleed-type expansion device, or if liquid could migrate from the evaporator into the compressor sump by gravity. If too much liquid refrigerant accumulates in the sump it will saturate the oil and lead to a flooded start: when the compressor starts, the refrigerant evaporates abruptly under the sudden decrease of the bottom shell pressure, causing the oil to foam. In extreme situations, this might result in too much oil leaving the compressor, which must be avoided as it causes irreversible damages due to possible lack of lubrication.
MLZ/MLM scroll compressors can tolerate occasional flooded starts as long as the system has been evaluated.

A suitable test to evaluate the risk of off-cycle migration is the following:

- Stabilize the non running system at 5°C ambient temperature.
- Raise the ambient temperature to 20°C and keep it for 10 minutes.
- Start the compressor and monitor sump temperature, sight glass indication and sound level.

The presence of liquid in the crankcase can be easily detected by checking the sump level through the oil sight glass. Foam in the oil sump indicates a flooded start.
A noisy start, oil loss from the sump and sump cool down are indications for migration.
Depending on the amount of migration graduate measures shall be taken:

- **Crankcase heater**
- **Liquid line solenoid valve**
- **Pump down cycle**

Crankcase heater: when the compressor is idle, the oil temperature in the sump must be maintained at no lower than 10 K above the saturation temperature of the refrigerant on the low-pressure side. This requirement ensures that the liquid refrigerant is not accumulating in the sump. A crankcase heater is only effective if capable of sustaining this level of temperature difference. Tests must be conducted to ensure that the appropriate oil temperature is maintained under all ambient conditions (temperature and wind). Below –5°C ambient temperature and a wind speed of above 5m/sec, it's recommended to thermally insulated the heaters in order to limit the surrounding energy losses.

Since the total system charge may be undefined, a crankcase heater is recommended on all systems with remote heat exchangers. In addition, any system containing a refrigerant charge in excess of the maximum recommended system charge for compressors requires a crankcase heater.

Belt-type crankcase heater accessories are available from Danfoss (see section "Spare parts & Accessories").

The heater must be energized whenever the compressor is off.

⚠ Provide separate electrical supply for the heaters so that they remain energized even when the machine is out of service (eg. Seasonal shutdown).

It is recommended that the heater be turned on for a minimum of 8 hours prior to starting the compressor.

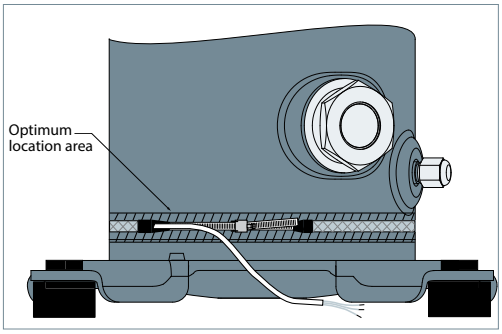

Liquid line solenoid valve (LLSV): This feature is very convenient and can be used on all types of applications.
An LLSV is used to isolate the liquid charge in the high pressure side, thereby preventing against charge transfer or excessive migration to the compressor during off-cycles. The quantity of refrigerant remaining in the low-pressure side of the system can be further reduced by using a pump-down cycle in association with the LLSV.

Pump-down cycle: Once the system has reached its set point and is about to shut off, the LLSV on the liquid line closes. The compressor then pumps the majority of the refrigerant charge into the high pressure side before the system stops on the low pressure pump-down switch. This step reduces the amount of charge on the low side in order to prevent off-cycle migration.

A pump-down cycle represents one of the most effective ways to protect against the off-cycle migration of refrigerant; however it is only convenient to apply on application with thermostatic control.

Rack application with pressostatic control can use timer delay to empty the evaporators before the stop. Time should be carefully set to not interfere with the low safety pressure switch.

For low pressure pump-down switch settings, refer to section "High and low pressure protection". For suggested wiring diagrams, please see section "Electrical data".

Models MLZ/MLM015-048 incorporate an internal low leak check valve that is appropriate for pump-down operations. This valve prevents the back flow of refrigerant from the high pressure to the low pressure side through the compressor so pump down conditions can be achieved and maintained.

Models MLZ/MLM058-076 are not equipped with this low leak check valve. Under certain conditions, the internal valve may not completely seal, and due to the refrigerant back flow the compressor might restart during pump-down applications. Repeated short cycling can result in a compressor breakdown. It is recommended to install an external magnetic check valve (such as Danfoss Part No. 120Z5046) close to the compressor's discharge connector so the discharge volume is minimized.

A magnetic check valve is recommended for this as it offers the best solution regarding minimal required and maximal pressure drop over the wide application envelope of the MLZ/MLM compressors. If a Danfoss NRV check valve is applied it has to be carefully selected for the specific operation conditions of the individual system.

Tests for pump down cycle approval:
- As the pump-down switch setting is inside the application envelope, tests should be carried out to check unexpected cut-out during transient conditions (ie. defrost – cold starting). When unwanted cut-outs occur, the low pressure pump-down switch can be delayed. In this case a low pressure safety switch without any delay timer is mandatory.

- While the thermostat is off, the number of pressure switch resets should be limited to avoid short cycling of the compressor. Use dedicated wiring and an additional relay which allows for one shot pump-down.

The pump-down allows to store all the refrigerant in the high pressure side circuit. On unitary or close-coupled systems, where the system refrigerant charge is expected to be both correct and definable the entire system charge may be stored in the condenser during pump-down if all components have been properly sized.

Other application needs a liquid receiver to store the refrigerant.

Receiver dimensioning requires special attention. The receiver shall be large enough to contain part of the system refrigerant charge but it shall not be dimensioned too large. A large receiver easily leads to refrigerant overcharging during maintenance operation.

Liquid flood back

During normal operation, refrigerant enters the compressor as a superheated vapour. Liquid flood back occurs when a part of the refrigerant entering the compressor is still in liquid state.

A continuous liquid flood back will cause oil dilution and, in extreme situations lead to lack of lubrication and high rate of oil leaving the compressor.

Liquid flood back test - Repetitive liquid flood back testing must be carried out under TXV threshold operating conditions: a high pressure ratio and minimum evaporator load, along with the measurement of suction superheat, oil sump temperature and discharge gas temperature.

During operations, liquid flood back may be detected by measuring either the oil sump temperature or the discharge gas temperature. If at any time during operations, the oil sump temperature drops to within 10K or less above the saturated suction temperature, or should the discharge gas temperature be less than 35K above the saturated discharge temperature, this indicates liquid flood back.

Continuous liquid flood back can occur with a wrong dimensioning, a wrong setting or malfunction of the expansion device or in case of evaporator fan failure or blocked air filters.

A suction accumulator providing additional protection as explained hereunder can be used to solve light continuous liquid flood back.

Suction accumulator: a suction accumulator offers protection against refrigerant flood back at start-up, during operations or defrosting by trapping the liquid refrigerant upstream from the compressor. The suction accumulator also protects against off-cycle migration by providing additional internal free volume to the low side of the system.

A suction accumulator must be carefully dimensioned, taking into account the refrigerant charge as well as the gas velocity in the suction line. Depending on the operating conditions it may happen that the recommended connections of the accumulator are one size smaller than the suction line.

Low ambient application

Low ambient start-up

Under cold ambient conditions (<0°C), upon start-up the pressure in the condenser may be so low that a sufficient pressure differential across the expansion device cannot be developed to properly feed the evaporator.

As a result, the compressor may go into a deep vacuum, which can lead to compressor failure due to internal arcing and instability in the scroll wraps. Under no circumstances should the compressor be allowed to operate under vacuum. The low-pressure control must be set in accordance with the table "High and low pressure protection" in order to prevent this from happening.

Early feeding of the evaporator and management of the discharge pressure could help to attenuate these effects.

Low pressure differentials can also cause the expansion device to «hunt» erratically, which might cause surging conditions within the evaporator, with liquid spillover into the compressor. This effect is most pronounced during low load conditions, which frequently occur during low ambient conditions.

Low ambient operations

It is recommended that the unit be tested and monitored at minimum load and low ambient conditions as well. The following considerations should be taken into account to ensure proper system operating characteristics.

The expansion device should be sized to ensure proper control of the refrigerant flow into the evaporator. An oversized valve may result in erratic control. This consideration is especially important in manifolded units where low load conditions may require the frequent cycling of compressors. This can lead to liquid refrigerant entering the compressor if the expansion valve does not provide stable refrigerant super-heat control under varying loads.

The superheat setting of the expansion device should be sufficient to ensure proper superheat levels during low loading periods. A minimum of 5 K stable superheat is required.

Head pressure control under low ambient conditions: Several possible solutions are available to prevent the risk of compressor to vacuum and low pressure differential between the suction and discharge pressures.

In air-cooled machines, cycling the fans with a head pressure controller will ensure that the fans remain off until the condensing pressure has reached a satisfactory level. Variable speed fans can also be used to control the condensing pressure. In water-cooled units, the same can be performed using a water regulator valve that is also operated by head pressure, thereby ensuring that the water valve does not open until the condensing pressure reaches a satisfactory level. The minimum condensing pressure must be set at the minimum saturated condensing temperature shown in the application envelopes.

Under very low ambient conditions, in which testing has revealed that the above procedures might not ensure satisfactory condensing and suction pressures, the use of a head pressure control valve is recommended. Note: This solution requires extra refrigerant charge, which can introduce other problems. A non-return valve in the discharge line is recommended and special care should be taken when designing the discharge line.

For further information, please contact Danfoss.

Scroll and reciprocating

Unlike the reciprocating compressor, a scroll doesn't have dead volume. Neither does it have a suction valve causing pressure drop. As a result a scroll compressor has a high volumetric efficiency even at low suction pressure. In systems such as ice makers and milk cooling tanks this high capacity at low temperature shortens the cooling time.

When moving from a reciprocating compressor to a scroll compressor, the selection shall always be made based on cooling capacity at the application rating point. Never make a selection based on equivalent displacement.

Application Guidelines	Specific application recommendations	
Low load operations	The compressor should be run for a minimum period to ensure that the oil has sufficient time to properly return to the compressor sump and	that the motor receives enough cooling under conditions of lowest refrigerant mass flow.
Brazed plate heat exchangers	A brazed plate heat exchanger needs very little internal volume to satisfy the heat transfer requirements. Consequently, the heat exchanger offers very little internal volume for the compressor to draw vapour from the suction side. The compressor can then quickly enter into a vacuum condition. It is therefore important that the expansion device be sized correctly and that a sufficient pressure differential across the expansion device be available to ensure adequate refrigerant feed into the evaporator. This aspect is of special concern when operating the unit under low ambient and load conditions. For further information on these conditions, please refer to the previous sections.	Due to the small volume of the brazed plate heat exchanger, no pump-down cycle is normally required. The suction line running from the heat exchanger to the compressor must be trapped to avoid refrigerant migration to the compressor. When using a brazed plate condenser heat exchanger, a sufficient free volume for the discharge gas to accumulate is required in order to avoid excess pressure build-up. At least 1 meter of discharge line is necessary to generate this volume. To help reduce the discharge gas volume immediately after start-up, the supply of cooling water to the heat exchanger may be opened before the compressor starts, to remove superheat and condense the incoming discharge gas more quickly.
Water utilising systems	Apart from residual moisture in the system after commissioning, water could also enter the refrigeration circuit during operation. Water in the system shall always be avoided. Not only because it can shortly lead to electrical failure, sludge in sump and corrosion but in particular because it can cause serious safety risks. Common causes for water leaks are corrosion and freezing.	Corrosion: Materials in the system shall be compliant with water and protected against corrosion. Freezing: When water freezes into ice its volume expands which can damage heat exchanger walls and cause leaks. During off periods water inside heat exchangers could start freezing when ambient temperature is lower than 0°C. During on periods ice banking could occur when the circuit is running continuously at too low load. Both situations should be avoided by connecting a pressure and thermostat switch in the safety line.

Starting sound level

During start-up transients it is natural for the compressor sound level to be slightly higher than during normal running. MLZ/MLM scroll compressors exhibit very little increased start-up transient sound. If a 3-phase model is miswired, the compressor will run in reverse. Reverse compressor rotation is characterized by an objectionable sound. To correct reverse rotation, disconnect power and switch any two of the three power leads at the unit contactor. Never switch leads at the compressor terminals.

Running sound level

MLZ/MLM are designed with features to reduce the sound level when a compressor is running. Sound levels are at rated (EN12900 medium temperature) conditions.

Model	50 Hz		60 Hz	
	Sound power (dBA) Without jacket	Sound power (dBA) With jacket	Sound power (dBA) Without jacket	Sound power (dBA) With jacket
MLZ/MLM015	67	57	71	60
MLZ/MLM019	67	57	71	60
MLZ/MLM021	67	57	71	60
MLZ/MLM026	67	59	71	62
MLZ/MLM030	69	62	73	65
MLZ/MLM038	69	63	74	66
MLZ/MLM042	71	63	74	66
MLZ/MLM045	71	63	74	66
MLZ/MLM048	72	64	74	67
MLZ/MLM058	74	66	78	70
MLZ/MLM066	74	66	78	70
MLZ/MLM 076	74	66	78	70

Maximum sound is +5dBA

Stopping sound level

MLZ/MLM have a unique discharge valve design that minimizes stopping noise. This results in very low shutdown sound.

Sound generation in a refrigeration system

Typical sound and vibration in refrigeration systems encountered by design and service engineers may be broken down into the following three source categories.
Sound radiation: This generally takes an airborne path.
Mechanical vibrations: These generally extend along the parts of the unit and structure.
Gas pulsation: This tends to travel through the cooling medium, i.e. the refrigerant.

The following sections will focus on the causes and methods of mitigation for each of the above sources.

Compressor sound radiation

For sound radiating from the compressor, the emission path is airborne and the sound waves are travelling directly from the machine in all directions.

The MLZ/MLM scroll compressors are designed to be quiet and the frequency of the sound generated is pushed into the higher ranges, which not only are easier to reduce but also do not generate the penetrating power of lower-frequency sound.

Use of sound-insulation materials on the inside of unit panels is an effective means of substantially reducing the sound being transmitted to the outside. Ensure that no components capable of transmitting sound/vibration within the unit come into direct contact with any non insulated parts on the walls of the unit.
Because of the unique design of a full-suction gas & oil cooled motor, compressor body insulation across its entire operating range is possible.

Mechanical vibrations

Vibration isolation constitutes the primary method for controlling structural vibration. MLZ/MLM scroll compressors are designed to produce minimal vibration during operations. The use of rubber isolators on the compressor base plate or on the frame of a manifolded unit is very effective in reducing vibration being transmitted from the compressor(s) to the unit. Rubber grommets are supplied with all MLZ/MLM compressors. Once the supplied rubber grommets have been properly mounted, vibration transmitted from the compressor base plate to the unit are held to a strict minimum.

In addition, it is extremely important that the frame supporting the mounted compressor be of sufficient mass and stiffness to help dampen any residual vibration potentially transmitted to the frame. The tubing should be designed so as to both reduce the transmission of vibrations to other structures and withstand vibration without incurring any damage. Tubing should also be designed for three-dimensional flexibility. For more information on piping design, please see the section entitled "Essential piping design considerations".

Gas pulsation

The MLZ/MLM scroll compressors have been designed and tested to ensure that gas pulsation has been minimized for the most commonly encountered refrigeration pressure ratio. On installations where the pressure ratio lies beyond the typical range, testing should be conducted under all expected conditions and operating configurations to ensure that minimum gas pulsation is present. If an unacceptable level is identified, a discharge muffler with the appropriate resonant volume and mass should be installed. This information can be obtained from the component manufacturer.

Application Guidelines	Installation	
	Each MLZ/MLM compressor is shipped with printed Instructions for installation. These Instructions can also be downloaded from our web site	www.danfoss.com or directly from: http://instructions.cc.danfoss.com
System cleanliness	The refrigeration system, regardless of the type of compressor used, will only provide high efficiency and good reliability, along with a long operating life, if the system contains solely the refrigerant and oil it was designed for. Any other substances within the system will not improve performance and, in most cases, will be highly detrimental to system operations. The presence of non-condensable substances and system contaminants, such as metal shavings, solder and flux, have a negative impact on compressor service life. Many of these contaminants are small enough to pass through a	mesh screen and can cause considerable damage within a bearing assembly. The use of highly hygroscopic PVE oil in MLZ compressors requires that the oil be exposed to the atmosphere just as little as possible. During the manufacturing process, circuit contamination may be caused by: • Brazing and welding oxides, • Filings and particles from the removal of burrs in pipe-work, • Brazing flux, • Moisture and air.
Compressor handling and storage	Compressors are provided with a lifting lug. This lug should always be used to lift the compressor. Once the compressor is installed, the lifting lug should never be used to lift the complete installation. The compressor must be handled	with caution in the vertical position, with a maximum inclination of 15° from vertical. Store the compressor between -35°C and 55°C, not exposed to rain or corrosive atmosphere.
Compressor mounting	Maximum inclination from the vertical plane, while operating must not exceed 7 degrees. All compressors are delivered with 4 rubber grommets and metal sleeves. Compressors	must always be mounted with these grommets. Recommended torque for mounting bolts: 11 Nm (±1 Nm).
Compressor holding charge	Each compressor is shipped with a nominal dry nitrogen holding charge between 0.4 bar and 0.7 bar, and is sealed with elastomer plugs. The plugs should be removed with care to avoid oil loss when the holding charge is released. Remove the suction plug first and the discharge plug	afterwards. The plugs shall be removed only just before connecting the compressor to the installation in order to avoid moisture entering the compressor. When the plugs are removed, it is essential to keep the compressor in an upright position to avoid oil spillage.
Tube brazing procedure	Do not bend the compressor discharge or suction lines or force system piping into the compressor connections, because this will increase	stresses that are a potential cause of failure. Recommended brazing procedures and material, are described on following page.
Brazing material	For copper suction and discharge fittings, use copper-phosphorus brazing material. Sil-Fos® and other silver brazing materials are also acceptable.	If flux is required for the brazing operation, use coated rod or flux core wire. To avoid system contamination, do not brush flux on.

Compressor connection

When brazing the compressor fittings, do not overheat the compressor shell, which could severely damage certain internal components due to excessive heating. Use of a heat shield and/or a heat-absorbent compound is highly recommended. For brazing the suction and discharge connections, the following procedure is advised:

- Make sure that no electrical wiring is connected to the compressor.
- Protect the terminal box and compressor painted surfaces from torch heat damage (see diagram).
- Use only clean refrigeration-grade copper tubing and clean all connections.
- Purge nitrogen through the compressor in order to prevent against oxidation and flammable conditions. The compressor should not be exposed to the open air for extended periods.
- Use of a double-tipped torch is recommended.
- Apply heat evenly to area A until the brazing temperature is reached. Move the torch to area B and apply heat evenly until the brazing temperature has been reached there as well, and then begin adding the brazing material. Move the torch evenly around the joint, in applying only enough brazing material to flow the full circumference of the joint.
- Move the torch to area C only long enough to draw the brazing material into the joint, but not into the compressor.
- Remove all remaining flux once the joint has been soldered with a wire brush or a wet cloth. Remaining flux would cause corrosion of the tubing.

Ensure that no flux is allowed to enter into the tubing or compressor. Flux is acidic and can cause substantial damage to the internal parts of the system and compressor.

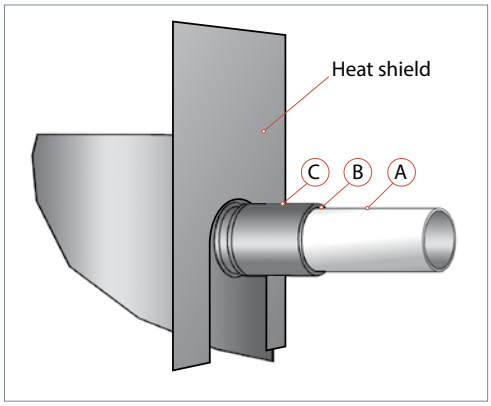

The PVE oil used in MLZ compressors is highly hygroscopic and will rapidly absorb moisture from the air. The compressor must therefore not be left open to the atmosphere for a long period of time. The compressor fitting plugs shall be removed just before brazing the compressor.

⚠ **Before eventual unbrazing the compressor or any system component, the refrigerant charge must be removed from both the high and low pressure sides. Failure to do so may result in serious personal injury. Pressure gauges must be used to ensure all pressures are at atmospheric level.**

For more detailed information on the appropriate materials required for brazing or soldering, please contact the product manufacturer or distributor. For specific applications not covered herein, please contact Danfoss for further information.

		Brazed connection ODF tube	Rotolock connection sizes
MLZ/MLM015-026	Suction	3/4"	1"1/4
	Discharge	1/2"	1"
MLZ/MLM030-045	Suction	7/8"	1"1/4
	Discharge	1/2"	1"
MLZ/MLM048	Suction	7/8"	1"1/4
	Discharge	3/4"	1"1/4
MLZ/MLM058-076	Suction	1"1/8	1"3/4
	Discharge	7/8"	1"1/4

Vacuum evacuation and moisture removal

Moisture obstructs the proper functioning of the compressor and the refrigeration system.

Air and moisture reduce service life and increase condensing pressure, and cause excessively high discharge temperatures, which can destroy the lubricating properties of the oil. Air and moisture also increase the risk of acid formation, giving rise to copper platting. All these phenomena can cause mechanical and electrical compressor failure.

For these reasons it's important to perform a vacuum dehydration on the system to remove all residual moisture from the pipe-work after assembly;

MLZ and MLM compressors are delivered with < 100 ppm moisture level. The required moisture level in the circuit after vacuum dehydration must be < 100 ppm for systems with an MLZ and < 300 ppm for systems with an MLM compressor.

- Never use the compressor to evacuate the system.
- Connect a vacuum pump to both the LP & HP sides.
- Evacuate the system to a pressure of 500 µm Hg (0.67 mbar) absolute.
- Do not use a megohm meter nor apply power to the compressor while it's under vacuum as this may cause internal damage.

Liquid line filter driers

A properly sized & type of drier is required. Important selection criteria include the driers water content capacity, the system refrigeration capacity, and the system refrigerant charge. The drier must be able to reach and maintain a moisture level of 50 ppm end point dryness (EPD). Danfoss recommends DCL (solid core) driers for the MLM compressor (R22 with Alkylbenzene) and DML (100% molecular sieve) driers for MLZ compressors (R407A,R407F,R404A, R507, R134a, R22) with PVE oil.

For servicing of existing installations where acid formation may be present, the Danfoss DCL solid core filter drier containing activated alumina is recommended.

After burn out, remove & replace the liquid line filter drier and install a Danfoss type DAS burnout drier of the appropriate capacity. Refer to the DAS drier instructions and technical information for correct use of the burnout drier on the liquid line.

Refrigerant charging

It is recommended that system charging be done using the weighed charge method, adding refrigerant to the high side of the system. Charging the high and low sides of a system with gas simultaneously at a controlled rate is also an acceptable method. Do not exceed the recommended unit charge, and never charge liquid to the low side.

Vacuum or charge from one side can seal the scrolls and result in a non-starting compressor. When servicing, always ensure that LP/HP pressures are balanced before starting the compressor.

Be sure to follow all government regulations regarding refrigerant reclamation and storage.

Insulation resistance and dielectric strength

Insulation resistance must be higher than 1 megohm when measured with a 500 volt direct current megohm tester.

Each compressor motor is tested at the factory with a high potential voltage (hi-pot) that exceeds the UL requirement both in potential and in duration. Leakage current is less than 0.5 mA.

MLZ/MLM scroll compressors are configured with the pump assembly at the top of the shell, and the motor below. As a result, the motor can be partially immersed in refrigerant and oil. The presence of refrigerant around the motor windings will result in lower resistance values to ground and higher leakage current readings. Such readings do not indicate a faulty compressor, and should not be cause for concern.

In testing insulation resistance, Danfoss recommends that the system be first operated briefly to distribute refrigerant throughout the system. Following this brief operation, retest the compressor for insulation resistance or current leakage.

Never reset a breaker or replace a fuse without first checking for a ground fault (a short circuit to ground). Be alert for sounds of arcing inside the compressor.

Packaging

Single pack

Compressors are packed individually in a cardboard box. They can be ordered in any quantity. Minimum ordering quantity = 1. As far as possible, Danfoss will ship the boxes on full pallets of 6 or 9 compressors according below table.

- Each box also contains following accessories:
- 4 grommets
- 4 assemblies of self tapping US thread bolts, washers and sleeves
- 4 additional sleeves
- 1 screw for earth connection
- Run capacitors are available as accessories for motor code 5 (220-240V/1/50Hz)



Industrial pack

Compressors are not packed individually but are shipped all together on one pallet. They can be ordered in quantities of full pallets only, multiples of 12 or 16 compressors, according below table.

Each industrial pack pallet contains following accessories:

- 4 grommets per compressor
- 4 sleeves per compressor



Packaging details

		Danfoss pallets Optimized for overseas container loading & European storage racks		US pallets Optimized for overseas container loading	
	Code number	121U….		120U….	
	Pack type	Industrial pack	Single pack	Industrial pack	Single pack
	Compressors per pallet	12	6 *	16	16
	Static stacking of pallets **	4	4	4	4
Shipped accessories	Run capacitor (for single phase models)	Not included	Not included	Not included	Not included
	Screw for earth connection	Included	Included	Not included	Included
	4 grommets per compressor	Included	Included	Included	Included
	4 assemblies of self tapping US thread bolt + washer + sleeve per compressor	Not included	Included	Not included	Included
	4 extra sleeves per compressor	Included	Included	Included	Included

* Quantity for full pallets. Single packs can be ordered per 1.
** Stacking only allowed for full pallets with identical products per pallet

Single pack

Brazed version




	Compressors	Model variation	Connections	Features	Voltage code 1	Voltage code 2	Voltage code 4	Voltage code 5	Voltage code 7	Voltage code 9
Danfoss pallet	MLZ015	T	P	9	-	120U8036	121U8002	121U8024	-	-
	MLZ019	T	P	9	121U8060	121U8038	121U8004	121U8026	-	-
	MLZ021	T	P	9	121U8062	121U8040	121U8006	121U8028	-	-
	MLZ026	T	P	9	121U8064	121U8042	121U8008	121U8030	-	-
	MLZ030	T	C	9	121U8066	121U8044	121U8010	121U8032	-	-
	MLZ038	T	C	9	121U8068	121U8046	121U8012	121U8034	-	-
	MLZ042	T	C	9	-	-	-	121U8419	-	-
	MLZ045	T	C	9	-	121U8048	121U8014	-	-	-
	MLZ048	T	C	9	-	121U8050	121U8016	-	-	-
	MLZ058	T	C	9	-	121U8052	121U8018	-	-	-
	MLZ066	T	C	9	-	121U8054	121U8020	-	-	-
	MLZ076	T	C	9	-	121U8056	121U8022	-	-	-
US pallet	MLZ015	T	P	9	120U8058	120U8036	120U8002	120U8024	-	120U8413
	MLZ019	T	P	9	120U8060	120U8038	120U8004	120U8026	-	120U8266
	MLZ021	T	P	9	120U8062	120U8040	120U8006	120U8028	-	120U8272
	MLZ026	T	P	9	120U8064	120U8042	120U8008	120U8030	-	120U8278
	MLZ030	T	C	9	120U8066	120U8044	120U8010	120U8032	-	120U8284
	MLZ038	T	C	9	120U8068	120U8046	120U8012	120U8034	-	120U8296
	MLZ042	T	C	9	120U8399	-	-	-	-	-
	MLZ045	T	C	9	-	120U8048	120U8014	-	120U8332	120U8302
	MLZ048	T	C	9	-	120U8050	120U8016	-	120U8338	120U8308
	MLZ058	T	C	9	-	120U8052	120U8018	-	120U8344	120U8314
	MLZ066	T	C	9	-	120U8054	120U8020	-	120U8350	-
	MLZ076	T	C	9	-	120U8056	120U8022	-	120U8356	-

Rotolock version




Compressors	Model variation	Connections	Features	Voltage code 1	Voltage code 2	Voltage code 4	Voltage code 5	Voltage code 7	Voltage code 9
MLZ015	T	T	9	121U8513	121U8553	121U8529	121U8521	121U8537	121U8545
MLZ019	T	T	9	121U8515	121U8555	121U8531	121U8523	121U8539	121U8547
MLZ021	T	T	9	121U8517	121U8557	121U8533	121U8525	121U8541	121U8549
MLZ026	T	T	9	121U8519	121U8559	121U8535	121U8527	121U8543	121U8551
MLZ030	T	Q	9	121U8561	121U8597	121U8573	121U8567	121U8581	121U8589
MLZ038	T	Q	9	121U8563	121U8599	121U8575	121U8569	121U8583	121U8591
MLZ042	T	Q	9	121U8565	-	-	121U8571	-	-
MLZ045	T	Q	9	-	121U8601	121U8577	-	121U8585	121U8593
MLZ048	T	Q	9	-	121U8603	121U8579	-	121U8587	121U8595
MLZ058	T	Q	9	-	121U8627	121U8609	-	121U8615	121U8621
MLZ066	T	Q	9	-	121U8623	121U8605	-	121U8611	121U8617
MLZ076	T	Q	9	-	121U8625	121U8607	-	121U8613	121U8619

Industrial pack

Brazed version

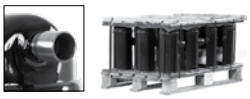

	Compressors	Model variation	Connections	Features	Voltage code 1	Voltage code 2	Voltage code 4	Voltage code 5	Voltage code 7	Voltage code 9
Danfoss pallet	MLZ015	T	P	9	-	120U8035	121U8001	121U8023	-	-
	MLZ019	T	P	9	121U8059	121U8037	121U8003	121U8025	-	-
	MLZ021	T	P	9	121U8061	121U8039	121U8005	121U8027	-	-
	MLZ026	T	P	9	121U8063	121U8041	121U8007	121U8029	-	-
	MLZ030	T	C	9	121U8065	121U8043	121U8009	121U8031	-	-
	MLZ038	T	C	9	121U8067	121U8045	121U8011	121U8033	-	-
	MLZ042	T	C	9	-	-	-	121U8418	-	-
	MLZ045	T	C	9	-	121U8047	121U8013	-	-	-
	MLZ048	T	C	9	-	121U8049	121U8015	-	-	-
	MLZ058	T	C	9	-	121U8051	121U8017	-	-	-
	MLZ066	T	C	9	-	121U8053	121U8019	-	-	-
	MLZ076	T	C	9	-	121U8055	121U8021	-	-	-
US pallet	MLZ015	T	P	9	120U8057	120U8035	120U8001	120U8023	-	120U8412
	MLZ019	T	P	9	120U8059	120U8037	120U8003	120U8025	-	120U8265
	MLZ021	T	P	9	120U8061	120U8039	120U8005	120U8027	-	120U8271
	MLZ026	T	P	9	120U8063	120U8041	120U8007	120U8029	-	120U8277
	MLZ030	T	C	9	120U8065	120U8043	120U8009	120U8031	-	120U8283
	MLZ038	T	C	9	120U8067	120U8045	120U8011	120U8033	-	120U8295
	MLZ042	T	C	9	120U8398	-	-	-	-	-
	MLZ045	T	C	9	-	120U8047	120U8013	-	120U8331	120U8301
	MLZ048	T	C	9	-	120U8049	120U8015	-	120U8337	120U8307
	MLZ058	T	C	9	-	120U8051	120U8017	-	120U8343	120U8313
	MLZ066	T	C	9	-	120U8053	120U8019	-	120U8349	-
	MLZ076	T	C	9	-	120U8055	120U8021	-	120U8355	-

Rotolock version



Compressors	Model variation	Connections	Features	Voltage code 1	Voltage code 2	Voltage code 4	Voltage code 5	Voltage code 7	Voltage code 9
MLZ015	T	T	9	121U8512	121U8552	121U8528	121U8520	121U8536	121U8544
MLZ019	T	T	9	121U8514	121U8554	121U8530	121U8522	121U8538	121U8546
MLZ021	T	T	9	121U8516	121U8556	121U8532	121U8524	121U8540	121U8548
MLZ026	T	T	9	121U8518	121U8558	121U8534	121U8526	121U8542	121U8550
MLZ030	T	Q	9	121U8560	121U8596	121U8572	121U8566	121U8580	121U8588
MLZ038	T	Q	9	121U8562	121U8598	121U8574	121U8568	121U8582	121U8590
MLZ042	T	Q	9	121U8564	-	-	121U8570	-	-
MLZ045	T	Q	9	-	121U8600	121U8576	-	121U8584	121U8592
MLZ048	T	Q	9	-	121U8602	121U8578	-	121U8586	121U8594
MLZ058	T	Q	9	-	121U8626	121U8608	-	121U8614	121U8620
MLZ066	T	Q	9	-	121U8622	121U8604	-	121U8610	121U8616
MLZ076	T	Q	9	-	121U8624	121U8606	-	121U8612	121U8618

Run capacitors for PSC wiring



Type	Code n°	Description	Application	Packaging	Pack size
80 µF	120Z0052	PSC wiring Run Capacitor 80 µF,	60HZ,Motor Code 1 : MLZ/MLM042	Multipack	10
70 µF	120Z0051	PSC wiring Run Capacitor 70 µF,	"50Hz,Motor Code 5: MLZ/MLM019-021-26 60HZ,Motor Code 1 : MLZ/MLM030"	Multipack	10
60 µF	120Z0050	PSC wiring Run Capacitor 60 µF,	60HZ,Motor Code 1 : MLZ/MLM026	Multipack	10
55 µF	8173234	PSC wiring Run Capacitor 55 µF,	"50Hz,Motor Code 5: MLZ/MLM038-042 60HZ,Motor Code 1: MLZ/MLM038"	Multipack	10
50 µF	8173233	PSC wiring Run Capacitor 50 µF,	50Hz,Motor Code 5: MLZ/MLM030	Multipack	10
45 µF	8173232	PSC wiring Run Capacitor 45 µF,	60HZ,Motor Code 1 : MLZ/MLM015-019-021	Multipack	10
40 µF	8173231	PSC wiring Run Capacitor 40 µF,	50Hz,Motor Code 5: MLZ/MLM015	Multipack	10

Start capacitors for CSR wiring



Type	Code n°	Description	Application	Packaging	Pack size
145-175 µF	120Z0399	CSR wiring Start Capacitor 145-175 µF,	"50Hz,Motor Code 5: MLZ/MLM015-019-021-026 60HZ,Motor Code 1 : MLZ/MLM015-019-021"	Multipack	10
161-193 µF	120Z0400	CSR wiring Start Capacitor 161-193 µF,	"50Hz,Motor Code 5: MLZ/MLM030 60HZ,Motor Code 1 : MLZ/MLM030"	Multipack	10
88-108 µF	8173001	CSR wiring Start Capacitor 88-108 µF,	"50Hz,Motor Code 5: MLZ/MLM038-042 60HZ,Motor Code 1 : MLZ/MLM026 ,MLZ/MLM038"	Multipack	10

Starting relays for CSR wiring



Type	Code n°	Description	Application	Packaging	Pack size
RVA9CKL	120Z0393	CSR wiring Starting Relay, motor voltage code 5 - 220-240V / 1 / 50Hz	MLZ/MLM015-019-021-026	Multipack	10
RVA3EKL	120Z0394	CSR wiring Starting Relay, motor voltage code 5 - 220-240V / 1 / 50Hz	MLZ/MLM030	Multipack	10
RVA4GKL	120Z0395	CSR wiring Starting Relay, motor voltage code 5 - 220-240V / 1 / 50Hz	MLZ/MLM038-042	Multipack	10
RVA2ACKL	120Z0396	CSR wiring Starting Relay, motor voltage code 1 -208-230V / 1 / 60Hz	MLZ/MLM015-019-021	Multipack	10
RVA2ABKL	120Z0397	CSR wiring Starting Relay, motor voltage code 1 -208-230V / 1 / 60Hz	MLZ/MLM026-030,MLZ/MLM042	Multipack	10
RVAA4IKL	120Z0398	CSR wiring Starting Relay, motor voltage code 1 -208-230V / 1 / 60Hz	MLZ/MLM038	Multipack	10

Solder sleeve adapter sets



Code n°	Description	Application	Packaging	Pack size
120Z0126	Rotolock adaptor set (1-1/4" ~ 3/4") , (1" ~ 1/2")	MLZ/MLM 015-019-021-026	Multipack	6
120Z0127	Rotolock adaptor set (1-1/4" ~ 7/8") , (1" ~ 1/2")	MLZ/MLM 030-038-042-045	Multipack	6
120Z0128	Rotolock adaptor set (1-1/4" ~ 7/8") , (1-1/4" ~ 3/4")	MLZ/MLM 048	Multipack	6
120Z0129	Rotolock adaptor set (1-3/4" ~ 1-1/8") , (1-1/4" ~ 7/8")	MLZ/MLM 058-066-076	Multipack	6

Rotolock nuts and sleeves kit



Code n°	Description	Application	Packaging	Pack size
120Z5074	Rotolock nuts 1"1/4 and 1" with sleeves and gaskets	MLZ/MLM015-045	Multipack	6
120Z5076	2 rotolock nuts 1"1/4 with sleeves and gaskets	MLZ/MLM048	Multipack	6
120Z5075	Rotolock nuts 1"1/4 and 1"3/4 with sleeves and gaskets	MLZ/MLM058-066-076	Multipack	6

Rotolock adapters



Code n°	Description	Application	Packaging	Pack size
120Z0366	Rotolock adaptor (1-1/4" ~ 3/4")	MLZ/MLM 015-019-021-026 suction	Multipack	10
120Z0367	Rotolock adaptor (1-1/4" ~ 7/8")	MLZ/MLM 030-038-042-045-048 suction	Multipack	10
120Z0364	Rotolock adaptor (1-3/4" ~ 1-1/8")	MLZ/MLM 058-066-076 suction	Multipack	10
120Z0365	Rotolock adaptor (1" ~ 1/2")	MLZ/MLM 015-019-021-026-030-038-042-045 discharge	Multipack	10
120Z0366	Rotolock adaptor (1-1/4" ~ 3/4")	MLZ/MLM 048 discharge	Multipack	10
120Z0367	Rotolock adaptor (1-1/4" ~ 7/8")	MLZ/MLM 058-066-076 discharge	Multipack	10

Rotolock service valves and valve sets (without gasket)



Code n°	Description	Application	Packaging	Pack size
7968004	Rotolock valve, V06, (1" Rotolock, 1/2" ODF)	Discharge MLM/Z015-026-045	Industry pack	50
8168031	Rotolock valve, V06, (1" Rotolock, 1/2" ODF)		Multipack	6
7968006	Rotolock valve, V04, (1"1/4 Rotolock, 3/4" ODF)	Suction MLM/Z015-026 Discharge MLM/Z048	Industry pack	42
8168029	Rotolock valve, V04, (1"1/4 Rotolock, 3/4" ODF)		Multipack	6
7968007	Rotolock valve, V05, (1"1/4 Rotolock, 7/8" ODF)	Suction MLM/Z030-048 Discharge MLM/Z058-076	Industry pack	36
8168030	Rotolock valve, V05, (1"1/4 Rotolock, 7/8" ODF)		Multipack	6
7968009	Rotolock valve, V02, (1"3/4 Rotolock, 1"1/8 ODF)	Suction MLM/Z058-076	Industry pack	24
8168028	Rotolock valve, V02, (1"3/4 Rotolock, 1"1/8 ODF)		Multipack	6
7703008	Valve set V02 (1"3/4rotolock, 1"1/8 ODF), V05 (Rotolock 1"1/4, 7/8" ODF)	MLZ/MLM058-066-076	Multipack	6

Mounting kits



Code n°	Description	Application	Packaging	Pack size
120Z5005	Mounting kit for 1 scroll compressor including 4 grommets, 4 sleeves, 4 bolts, 4 washers	MLZ/MLM	Single pack	1
120Z5067	Mounting kit for 1 scroll compressor including 4 grommets, 4 sleeves, 4 bolts, 4 washers, rotolock connection kit for suction, discharge and economizer fitting for 1 scroll compressor including 3 Teflon seals, 2 nuts, 3 sleeves	MLZ/MLM015-045 LLZ013-015-018	Single pack	1
120Z5069	Mounting kit for 1 scroll compressor including 4 grommets, 4 sleeves, 4 bolts, 4 washers, rotolock connection kit for suction, discharge fitting for 1 scroll compressor including 3 Teflon seals, 2 nuts, 3 sleeves	MLZ/MLM048	Single pack	1
120Z5068	Mounting kit for 1 scroll compressor including 4 grommets, 4 sleeves, 4 bolts, 4 washers, rotolock connection kit for suction, discharge and economizer fitting for 1 scroll compressor including 3 Teflon seals, 2 nuts, 3 sleeves Teflon seals, sleeves, nuts 1"1/4 and 1"3/4	MLZ/MLM058-076 LLZ024-033	Single pack	1
120Z0407	Rigid grommets and washers for tandem / rack assembly. Set for 8 compressors	MLZ/MLM	Single pack	1

Crankcase heater



Code No	Description	Application	Packaging	Pack Size
120Z5040	Belt type crankcase heater, 65 W, 230 V, CE mark, UL (Wire length: 1270 mm)	MLZ/MLM 015-019-021-026	Multipack	4
120Z5041	Belt type crankcase heater, 55/70W, 400/460 V, CE mark, UL (Wire length: 1270 mm)	MLZ/MLM 015-019-021-026	Multipack	4
120Z5042	Belt type crankcase heater, 70 W, 575 V, CE mark, UL (Wire length: 1270 mm)	MLZ/MLM 015-019-021-026	Multipack	4
120Z0055	Belt type crankcase heater,40W,230V,CE mark, UL(wire length:1000mm)	MLZ/MLM015-019--021-26	Multipack	6
120Z0056	Belt type crankcase heater,40W,400V,CE mark, UL(wire length:1000mm)	MLZ/MLM015-019--021-26	Multipack	6
120Z0059	Belt type crankcase heater, 65 W, 230V, CE mark, UL (Wire length: 1000 mm)	MLZ/MLM 030-038-042-045-048-058-066-076	Multipack	6
120Z0060	Belt type crankcase heater, 65 W, 400 V, CE mark, UL (Wire length: 1000 mm)	MLZ/MLM 030-038-045-048-058-066-076	Multipack	6
120Z5012	Belt type crankcase heater, 70W, 460V, CE mark, UL	MLZ/MLM030-076	Multipack	4
120Z5013	Belt type crankcase heater, 70 W, 575V, CE mark, UL	MLZ/MLM030-076	Multipack	4

Discharge thermostat kit



Code No	Description	Application	Packaging	Pack Size
7750009	Discharge thermostat kit	All models	Multipack	10
7973008	Discharge thermostat kit	All models	Industry pack	50

Magnetic discharge non return valve



Code No	Description	Application	Packaging	Pack Size
120Z5046	Magnetic discharge non return valve	MLZ/MLM058-066-076	Multipack	6

Lubricant



Code No	Description	Application	Packaging	Pack Size
120Z5034	PVE lubricant, 1 litre can 320HV (FVC68D)	MLZ	Multipack	12

IP54 upgrade kit



Code No	Description	Application	Packaging	Pack Size
118U0056	IP54 upgrade kit for round terminal box	MLZ/MLM015 - 019 - 021 - 026	Multipack	6
118U0057	IP54 upgrade kit for square terminal box	MLZ/MLM030-038-042-045-048-058-066-076	Multipack	6

Acoustic hood



Code No	Description	Application	Packaging	Pack Size
120Z5083	Acoustic hood	MLZ/MLM015 - 019 - 021 - 026	Single pack	1
120Z5084	Acoustic hood	MLZ/MLM030 - 038 - 042 - 045 - 048	Single pack	1
120Z5085	Acoustic hood	MLZ/MLM058 - 066 - 076	Single pack	1

Terminal box



Code No	Description	Application	Packaging	Pack Size
120Z5015	Round terminal box (P & T version)	MLZ/MLM015 - 019 - 021 - 026	Multipack	10
120Z5018	Square terminal box (C & Q version)	MLZ/MLM030-038-042-045-058-066-076	Multipack	10

Manifolding service kit



Code No	Description	Application	Packaging	Pack Size
120Z5073	Oil equalisation kit including: 2 oil sight glass adaptors, rotolock nuts, sleeves and gaskets, feet spacers and washers for 2 compressors	All models	Multipack	6

ENGINEERING
TOMORROW

Danfoss Commercial Compressors

is a worldwide manufacturer of compressors and condensing units for refrigeration and HVAC applications. With a wide range of high quality and innovative products we help your company to find the best possible energy efficient solution that respects the environment and reduces total life cycle costs.

We have 40 years of experience within the development of hermetic compressors which has brought us amongst the global leaders in our business, and positioned us as distinct variable speed technology specialists. Today we operate from engineering and manufacturing facilities spread across three continents.



Danfoss Turbocor Compressors



Danfoss Inverter Scrolls



Danfoss Scrolls



Danfoss Optyma Condensing Units



Danfoss Maneurop Reciprocating Compressors



Danfoss Light Commercial Refrigeration Compressors

Our products can be found in a variety of applications such as rooftops, chillers, residential air conditioners, heatpumps, coldrooms, supermarkets, milk tank cooling and industrial cooling processes.

http://cc.danfoss.com

Danfoss Commercial Compressors, BP 331, 01603 Trévoux Cedex, France | +334 74 00 28 29

member of:
ASERCOM
www.asercom.org

Danfoss can accept no responsibility for possible errors in catalogues, brochures and other printed material. Danfoss reserves the right to alter its products without notice. This also applies to products already on order provided that such alterations can be made without subsequential changes being necessary in specifications already agreed.
All trademarks in this material are property of the respective companies. Danfoss and the Danfoss logotype are trademarks of Danfoss A/S. All rights reserved.