ENGINEERING
TOMORROW

TP9000

Programmable Room Thermostat with **Hot Water Time Control**

- Built-in hot water time control
- Remote room temperature sensor
- Chrono-proportional control or on/off control
- Frost protection setting
- Easy to use overrides
- Up to 6 time/temperature changes per day
- 7 day, 5/2 or 24 hour operation
- Wallplate construction





www.heating.danfoss.co.uk

ENGINEERING TOMORROW

TP9000
Programmable Room Thermostat
with Domestic Hot Water Time Control

The TP9000 is a programmable room thermostat with Hot Water timing and a remote temperature sensor. The TP9000 allows the user to select up to 6 different Heating temperature levels per day and the times when the changes occur as well as offering flexible Hot Water programming.

The TP9000 comes with a factory preset clock with automatic summer/winter time changes meaning manually adjusting the time is a thing of the past. The TP9000 can be set at installation to operate in either full 7 day, 5 day/2 day mode, which allows different programmes to be set for the weekend, or in 24 hour mode, in which case the programmed events are repeated every 24 hours.

Accessed via the APM (Advanced Programming Menu), setting made by the installer or the end user are stored for the life of the product in a non-volatile memory chip which does not require power.

Inside the APM you will find many customisable options, one of which is the operating temperature range, which is factory preset to 5-30°C, but can also be manually set to any min/max limit required (5-40°C) at time of installation to make the TP9000 a safe solution for use in sheltered accommodation where hypothermia may be of concern.

For installation convenience, as well as fitting onto the existing TP9 backplate, the TP9000 comes complete with a remote sensor which can be mounted up to 50 metres away from the programming unit.

In addition to the programmable room thermostat function, TP9000 also incorporates a Domestic Hot Water time control channel which allows a choice of 1, 2 or 3 Domestic Hot Water events to be programmed each day over a 7 day, 5-2 day or 24 hour period.

In addition to all of the above features the TP9000 has the ability to be set in Holiday Mode. Using the Holiday Mode, the Hot Water is switched off and the Central Heating is placed in frost protection mode. Upon reaching the set holiday return date, normal operation is resumed.

A 'Boost' function is available for the Hot Water and a +hrs function for the Heating channels. This extends the current temperature period by 1, 2 or 3 hours (Central Heating) and can be used to give an extra 1, 2 or 3 hours of Hot Water as required.

The convenience and simplicity of the TP9000 is further enhanced by the inclusion of an Information Button on the front of the unit. This allows for quick viewing of items like next timed event, service due date (if activated), and outdoor temperature (if outdoor sensor is fitted).

Optional service interval functionality is included in the TP9000, providing a customisable service period (between 28-366 days)



TP9000

The TP9000 incorporates many convenient user overrides, some of which are:

- Obtain an extra 1, 2 or 3 hour's Hot Water or Central Heating.
- Temporarily override room temperatures up or down.
- Optional Service Interval timer function to remind of boiler servicing requirement.
- Select Heating and Water off, with frost protection for periods away from home.
- Information button for quick viewing of next event, service due date or outdoor temperature.
- Holiday Mode
- APM Advanced Programming Menu.

	TP9000
Code Number	087N789200
Factory set clock	●
Factory pre-set programmes	●
Room time and temperature changes	up to 6 per day
Room temperature control range (°C)	5-30°C
Remote room temperature sensor	●
Selectable 7 day, 5/2 day or 24 hour operating mode	●
Fully independent Hot Water and Central Heating times	●
DHW time control events	up to 3 on/off events per day
Frost protection override option	●
+1, +2, +3 hour DHW and/or CH override	●
Room temperature overrides	●
Holiday Mode	●
Optional Service Interval Timer operation	●
Voltage rating	230 Vac, 50Hz
Switch action	2 x SPDT (linked internally)
Switch current rating	3 (1) A
Maximum ambient temperature	45°C
Memory back-up	Retained for life of product
Dimensions - Controller (mm)	135 wide x 88 high x 32 deep
Dimensions - TS2 Remote Sensor (mm)	61 wide x 45 high x 22 deep

Wiring Details

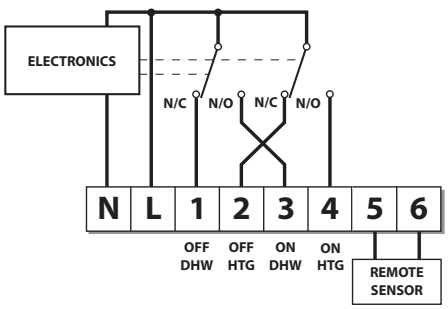

Danfoss Ltd
Ampthill Road, Bedford, MK42 9ER, T: 01234 364621, E: ukheating@danfoss.com, W: www.heating.danfoss.co.uk

VB.BY.B2.12_Sep2014

Part No: 734v02 09/14