MAKING MODERN LIVING POSSIBLE

Condensed Catalog

Featuring R410A Products
Third Edition

REFRIGERATION &
AIR CONDITIONING

Reliability from the leader in refrigeration

TR 6 Thermostatic Expansion Valves

The valves can be delivered with special connections and fittings both at the inlet and outlet and at the equalizer connection.

- Compact size - hermetic design.
- Developed and designed for R22 and R410A
- Rated capacities ranging up to:
  - R22: 6 TR
  - R410A: 5 TR

See page 28 for more information.

Optyma™ Condensing Units

- Condesner designed for dependable performance in the toughest of high ambient conditions
- Complete line from 1/6 to 13 1/2
- Units available for R134a, R22, R404A, and R12 replacement refrigerants
- Easy access service valves on all units
- Universal High/Medium/Low range in R404A fractional units
- Compact design

See page 125 for more information.

Performer® Universal Replacement Scroll

Redefining aftermarket replacement

- OEM Drop-in replacement for easy field installation
- Easy to use mounting template for field replacements
- Reliable, efficient, and competitively priced
- Upper mounting bracket for tandem units

See page 119 for more information.

Thermostatic Expansion Valves
T(E)2 Series 2
TUA(E) Series 4
TCAE/TCBE/TCCE Series 6
TUB(E) Series 8
Minimizer Service Kits 11
Maximizer Service Kits 15
TDE Series 17
TRE Series 22
NEW TR 6 Series 28
TE5-TE55 Series 31

Solenoid Valves
EVR Series 39
General Purpose Click-on Coil
GP Series 41

Pressure Regulators
Evaporator Pressure Regulators
KVP Series 46
Electronic Pressure Regulators
KVQ 48
Condenser Pressure Regulators
KVR/NRD Series 51
Hot Gas-bypass Capacity Regulators
TUH/TCHE Series 53
KVC 56
CPCE/LG Series 57
Crankcase Pressure Regulators
KVL Series 59
Receiver Pressure Regulators
KVD Series 61

Pressure Controls
KPU Series 63
MP Lube Oil Protection Series 69
KPU Thermostat 71

Temperature Controls
NEW Universal Thermostat, Type UT 75
Service Thermostats 76

Danfoss Saginomiya
Cartridge Controls
ACB Series 77
Thermostats
TB Series 78
Condenser Fan Speed Control
RGE Series 79
4 Way Reversing Valves
STF and VHV Series 80

System Protection
Liquid Line Filter Driers
DCL and DML Series 82
Burnout Driers
DAS Series 86

Bi-flow Filter Driers
DMB/DCB Series 88
Interchangeable Core Filter Driers
DCR Shells 91
Sight Glasses
SG Series 93
Check Valves
NRV Series 96
Oil Separators
OUB Series 98

Water Valves
WVFX Series 100

Shut-off Valves
BM Series 101
GBC Valves 104

Fractional HP Compressors
R134a 115 Volt/60 HZ AC 107
R134a 220 Volt/50 HZ AC 109
R134a Battery Driven 12/24 Volt DC 110
R404A Applications 111

Fractional HP Condensing Units
115 Volt/60 HZ AC 113

Commercial Compressors
Type MT/MTZ 115
Type LT/LTZ 118
Scroll Compressors 119

Hermetic Commercial Condensing Units
NEW Optyma™ Condensing Units 125
Water Cooled Type CMW/CMEW & CLW/CLEW 134

Appendices
Cross Reference Thermostatic Expansion Valves A1
Cross Reference Solenoid Valves A35
Cross Reference Filter Driers A38
Cross Reference Sight Glasses A42
Cross Reference Pressure Regulators A43
Cross Reference Pressure Controls A45
Cross Reference Thermostats A49
Cross Reference Check Valves A50
Cross Reference Differential Pressure/Lube Oil Protection Controls A51
Cross Reference Optyma™ Condensing Units A52

OEM Cross Reference B1

 © Danfoss Inc. 01-07 (USCO)

PRESSURE-TEMPERATURE CHART

Red figures = vacuum in inches of mercury
Black figures = pressure in psig

°F	R12 Vapor	R22 Vapor	R134a Vapor	R404A Vapor	R407C Liquid	R407C Vapor	R408A Vapor	R409A Liquid	R409A Vapor	R410A Vapor	R502 Vapor
-50	15.4″	6.2″	18.7″	0.6	2.9″	11.4″	1.6″	12.4″	17.2″	3.5	0.2″
-45	13.3″	2.7″	16.9″	2.7	0.4	8.5″	1.1	9.7″	15.2″	8.5	1.9
-40	11″	0.5	14.8″	5	2.5	5.2″	3.3	6.8″	13.1″	12	4.1
-35	8.4″	2.6	12.5″	7.6	4.8	1.5″	5.6	3.5″	10.7″	15	6.5
-30	5.5″	4.9	9.8″	10	7.3	1.3	8.2	0	8.1″	19	9.2
-25	2.3″	7.4	6.9″	13	10	3.6	11	2	5.1″	23	12
-20	0.6	10	3.7″	17	13	6.1	14	4.1	1.9″	27	15
-15	2.4	13	0.1″	21	17	8.8	18	6.5	0.8	32	19
-10	4.5	17	1.9	25	20	12	21	9	2.8	37	23
- 5	6.7	20	4.1	29	24	15	25	12	4.9	43	27
0	9.1	24	6.5	34	28	19	30	15	7.2	49	31
+ 5	12	28	9.1	39	33	23	34	18	9.7	55	36
10	15	33	12	44	38	27	39	22	13	62	41
15	18	38	15	50	44	32	45	26	15	70	47
20	21	43	18	56	49	37	51	30	19	78	53
25	25	49	22	63	56	43	57	34	22	87	59
30	28	55	26	70	63	49	64	39	26	97	66
35	33	62	30	78	70	55	71	44	30	107	73
40	37	69	35	86	78	62	79	49	35	118	81
45	42	76	40	95	86	70	87	55	39	130	89
50	47	84	45	105	95	78	96	61	44	142	97
55	52	93	51	115	105	86	105	68	50	155	107
60	58	102	57	125	115	95	115	75	56	170	116
65	64	111	64	137	125	105	126	82	62	185	127
70	70	121	71	149	137	115	137	90	69	201	138
75	77	132	79	161	149	126	149	98	76	217	149
80	84	144	87	175	162	138	161	106	83	235	161
85	92	156	95	189	176	150	174	116	92	254	174
90	100	168	104	204	190	163	188	125	100	274	187
95	108	182	114	219	206	177	203	135	109	295	201
100	117	196	124	236	222	192	219	146	119	317	216
105	127	211	135	253	239	208	235	157	130	341	232
110	136	226	146	272	256	224	252	169	141	365	248
115	147	243	158	291	275	242	270	181	152	391	265
120	158	260	171	311	295	261	289	194	165	418	283
125	169	278	185	332	315	280	309	208	178	446	301
130	181	297	199	355	337	301	330	222	192	476	321
135	194	317	214	378	359	323	352	237	206	507	341
140	207	337	229	402	383	346	374	253	222	539	363
145	220	359	246	428	407	371	398	269	238	573	385
150	235	382	263	454	432	397	432	286	256	608	408

Formula for Superheat

Suction line temp - evaporator temp = superheat

Suction line temp measured 6-12″ from suction part of evaporator	60°F
Evaporator temp converted from suction pressure	40°F
	—
Superheat	20°F

Introduction

T 2 and TE 2 Range $^1/_6$ to $4^1/_2$ tons (R22)

Thermostatic expansion valves regulate the injection of refrigerant liquid into evaporators.

Injection is controlled by the refrigerant superheat.

Therefore the valves are especially suitable for liquid injection in “dry” evaporators where the superheat at the evaporator outlet is proportional to the evaporator load.

Features

Large temperature range
Equally applicable to freezing, refrigeration, and air conditioning applications.

Interchangeable orifice assembly
- easier stocking
- easy capacity matching
- better service

Can be supplied with MOP (Max. Operating Pressure)
- Protects the compressor motor against excessive evaporating pressure during normal operation.

Patented double contact bulb
- Fast and easy to install.
- Good temperature transfer from pipe to bulb.

Valves for special temperature ranges can be supplied.

5 ft. long capillary tube

Ordering, components with flare × flare connection

Thermostatic element with sensor band, without orifice, filter cone, nuts

Refrigerant	Valve type	Pressure equalization	Capillary tube	Connection	Code no.					
				Inlet × outlet [1]	Range N –40 to +50°F		Range NM –40 to –25°F	Range NL –40 to –5°F	Range B –75 to –15°F	
			ft	in. × in.	Without MOP	MOP t_e = 60°F	MOP t_e = 32°F	MOP t_e = 15°F	Without MOP	MOP t_e = –4°F
R22	TX 2	Int.	5	$^3/_8 \times {}^1/_2$	068Z3206	068Z3208	068Z3224	068Z3226	068Z3207	068Z3228
	TEX 2	Ext.	5	$^3/_8 \times {}^1/_2$	068Z3209	068Z3211	068Z3225	068Z3227	068Z3210	068Z3229
R407C	TZ 2	Int.	5	$^3/_8 \times {}^1/_2$	068Z3496	068Z3516				
	TEZ 2	Ext.	5	$^3/_8 \times {}^1/_2$	068Z3501	068Z3517				
R134a	TN 2	Int.	5	$^3/_8 \times {}^1/_2$	068Z3346	068Z3347	068Z3393	068Z3369		
	TEN 2	Ext.	5	$^3/_8 \times {}^1/_2$	068Z3348	068Z3349	068Z3392	068Z3370		
R404A/ R507	TS 2	Int.	5	$^3/_8 \times {}^1/_2$	068Z3400	068Z3402	068Z3406	068Z3408	068Z3401	068Z3410
	TES 2	Ext.	5	$^3/_8 \times {}^1/_2$	068Z3403	068Z3405	068Z3407	068Z3409	068Z3404	068Z3411

1) Externally equalized connections are $^1/_4$ in. flare.

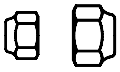

Flare connections

Connection for copper tubing with outside diameter	Reducer for copper tubing with outside diameter	Code no.
in.	in.	
$^1/_4$		011L1101
	$^1/_4$	011L1107

Example
A TE 2 thermostatic expansion valve consists of two elements + flare nuts if required:
– 1 thermostatic element
– 1 orifice assembly and flare nuts

When ordering one thermostatic expansion valve, TEX 2 with orifice 01, two code numbers are required:
– 1 thermostatic element **068Z3209**
– 1 orifice assembly 01 **068-2010**

© Danfoss Inc. 01-07 (USCO)

Orifice assembly with filter

The rated capacity is based on:
Evaporating temperature t_e = 40°F
for range N and t_e = –20°F for range B
Condensing temperature t_c = 90°F
Refrigerant temperature ahead of valve t_l = 80°F

Range N: –40 to +50°F

Orifice no.	Rated capacity in tons (TR)				Code no.
	R22	R407C	R134a	R404A R507	
0X	0.15	0.16	0.11	0.11	**068-2002**
00	0.3	0.3	0.25	0.21	**068-2003**
01	0.7	0.8	0.5	0.45	**068-2010**
02	1.0	1.1	0.8	0.6	**068-2015**
03	1.5	1.6	1.3	1.2	**068-2006**
04	2.3	2.5	1.9	1.7	**068-2007**
05	3.0	3.2	2.5	2.2	**068-2008**
06	4.5	4.9	3.0	2.6	**068-2009**

Range B: –75 to –15°F

Orifice no.	Rated capacity in tons (TR)		Code no.
	R22	R404A R507	
0X	0.15	0.11	**068-2002**
00	0.2	0.21	**068-2003**
01	0.3	0.45	**068-2010**
02	0.6	0.6	**068-2015**
03	0.8	1.0	**068-2006**
04	1.2	1.4	**068-2007**
05	1.5	1.7	**068-2008**
06	2.0	1.9	**068-2009**

Introduction

TUA-TUAE Range $^1/_6$ to $4^1/_2$ TR(R22)

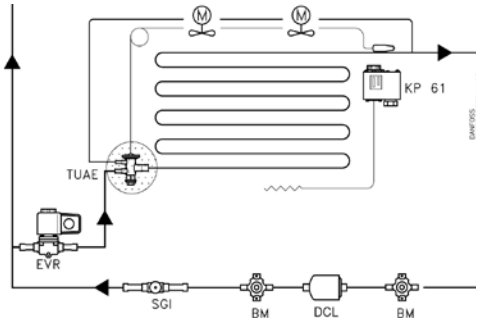

Type TUA/TUAE is available with interchangeable orifice assembly and removable strainer in a straightway design.

The valves are offered in rated capacities up to 4.5 TR(R22) and can be used in a wide range of applications.

The TUA/TUAE is made of stainless steel and therefore is especially well-suited to refrigeration systems where aggressive environments exist. The TUA/TUAE has been developed and designed especially for soldering into hermetic refrigeration systems.

For further information, please contact Danfoss.

Features

Interchangeable orifice assembly
For easier stocking, capacity matching, and service.

Bi-metal connections
Fast and easy soldering without the need for a wet cloth.

Refrigerants
R22, R134a, R404A, R407C, R507 (for other refrigerants, contact Danfoss)

Ship weight .5 lbs.

Compact design
Small dimensions and light weight for compact installation.

Stainless steel
- High body strength
- High corrosion resistance
- Highly vibration-resistant, flexible capillary tube

Precision Port design
Four major features contributing to superior repeatable performance over an extended valve life:
- Laser-welded power element insures diaphragm's structural integrity and lengthens life.
- Precision-machined cone and bushing avoid the need for a packing gland.
- Free-floating push-rod is self-aligning and eliminates binding.
- Precision-machined cone and orifice accurately meters refrigerant under all operating conditions.

Stainless steel capillary tube
- Tolerates more bending for easier installation and longer life.
- Greater resistance to vibration during operation.

Stainless steel double-contact bulb
- Self-aligning for fast and easy installation; secures with a single strap or quick clip.
- More contact surface for better heat transfer.

Patented superheat adjustment device:
Adjust with $^5/_{32}$ in. Allen wrench.

Removable strainer
- 100 mesh removable strainer for easy servicing.
- Suitable for use with new POE oils.

Laser engraving
- Durable positive valve identification; no labels to peel off over time.

Optional quick clip bulb fastener
- For fast and easy installation.

Maximum bulb temperature: 212°F

Maximum valve body temperature: 250°F

Short-lived peak: 300°F

Maximum working pressure
MWP = 500 psig
MWP R410A = 615 psig

Maximum test pressure
p' = 540 psig
R410A p' = 680 psig

Bi-flow operation
- With flow in opposite direction, the rated capacity is reduced by up to 15%.
- Note: Only TUAE models (except orifice 9) can be used for bi-flow operation.

Metric conversion
1 ton = 3.5 kW

© Danfoss Inc. 01-07 (USCO)

Ordering

Thermostatic element and valve body with bulb strap (without orifice and filter) R22, R134a, R404A, R407C, R507							
Refrigerant	Valve type	Pressure equalization	Capillary tube in.	Connections ODF x ODF in.	Code no.		
					Range N –40 to 50°F		Range B –75 to –15°F
					w/o MOP	MOP 60 °F	MOP –4°F
R22	TUA TUA	Int. Int.	59 59	1/4 x 1/2 3/8 x 1/2	**068U2234** **068U2235**	**068U2242** **068U2243**	
	TUAE TUAE	Ext. 1/4 in. Ext. 1/4 in.	59 59	1/4 x 1/2 3/8 x 1/2	**068U2236** **068U2237**	**068U2244** **068U2245**	
R134a	TUA TUA	Int. Int.	59 59	1/4 x 1/2 3/8 x 1/2	**068U2204** **068U2205**	**068U2212** **068U2213**	
	TUA TUA	Ext. 1/4 in. Ext. 1/4 in.	59 59	1/4 x 1/2 3/8 x 1/2	**068U2206** **068U2207**	**068U2214** **068U2215**	
R404A / R507	TUA TUA	Int. Int.	59 59	1/4 x 1/2 3/8 x 1/2	**068U2284** **068U2285**	**068U2292** **068U2293**	**068U2316** **068U2317**
	TUAE TUAE	Ext. 1/4 in. Ext. 1/4 in.	59 59	1/4 x 1/2 3/8 x 1/2	**068U2286** **068U2287**	**068U2294** **068U2295**	**068U2318** **068U2319**
R407C	TUA TUA	Int. Int.	59 59	1/4 x 1/2 3/8 x 1/2	**068U2324** **068U2325**	**068U2332** **068U2333**	
	TUAE TUAE	Ext. 1/4 in. Ext. 1/4 in.	59 59	1/4 x 1/2 3/8 x 1/2	**068U2326** **068U2327**	**068U2334** **068U2335**	

For range NM please contact Danfoss.

Orifice assembly with filter and gasket–Rated capacity in tons (TR) [1]										
Orifice no.	Range N: –40 to 50°F					Range B: –75 to –15°F				Code no.
	R22	R134a	R404A	R407C	R507	R22	R404A	R407C	R507	
0	0.17	0.13	0.13	0.18	0.13	0.15	0.10	0.13	0.11	**068U1030**
1	0.25	0.19	0.19	0.26	0.19	0.19	0.14	0.16	0.15	**068U1031**
2	0.36	0.28	0.28	0.38	0.27	0.24	0.18	0.20	0.20	**068U1032**
3	0.50	0.39	0.39	0.53	0.38	0.34	0.25	0.28	0.28	**068U1033**
4	0.75	0.59	0.60	0.80	0.57	0.50	0.37	0.41	0.41	**068U1034**
5	1.00	0.78	0.79	1.1	0.76	0.66	0.50	0.55	0.55	**068U1035**
6	1.5	1.2	1.2	1.6	1.1	1.0	0.75	0.82	0.82	**068U1036**
7	2.0	1.6	1.6	2.1	1.5	1.3	1.0	1.1	1.1	**068U1037**
8	3.0	2.3	2.4	3.2	2.3	2.0	1.5	1.6	1.7	**068U1038**
9	4.5	3.5	3.5	4.8	3.4	2.9	2.2	2.4	2.4	**068U1039**

1) According to ARI 750-01

Rated capacities for range N are based on:
Liquid temperature ahead of expansion valve t_l = 100°F
Evaporating temperature t_e = 40°F
Pressure drop across valve Δ p = 60 psi for R134a
Pressure drop across valve Δ p = 100 psi for R22, R404A, R407C and R507

Rated capacities for range B are based on:
Liquid temperature ahead of expansion valve t_l = 100°F
Evaporating temperature t_e = –40°F
Pressure drop across valve Δ p = 100 psi for R134a
Pressure drop across valve Δ p = 150 psi for R22, R404A, R407C and R507

Spare parts

Filter (24 pcs): **068U0016**
Gasket (24 pcs): **068U0015**

Note: To secure tightness, the orifice gasket *must* be changed each time the orifice is disassembled.

Metric conversions
1 psi = 0.07 bar
$^5/_9$ (t_1°F – 32) = t_2°C
1 ton = 3.5 kW
1 in. = 25.4 mm

Introduction

TCAE & TCBE Range 5-7 1/2 TR(R22) Straightway versions only

The TC thermostatic expansion valve has been developed and designed for soldering into hermetic refrigeration systems. It is manufactured in stainless steel and is therefore very suitable for installation in refrigeration systems for the food industry.

TC can be used in many different forms of refrigeration system.

TC is also available in a range of variants that give countless valve combination possibilities. Contact Danfoss for further information.

TCAE with interchangeable orifice assembly and adjustable superheat

TCBE with fixed orifice assembly and adjustable superheat

Features

Bimetal connections
- straightforward and fast soldering (no wet cloth or cooling pliers required)

Refrigerants
R22, R134a, R404A, R507, R407C, R410A and future refrigerants

Compact design
small dimensions and low weight

Stainless steel, hermetically tight solder version
- high connection strength
- high corrosion resistance
- capillary tube joints of high strength and vibration resistance

Laser-welded, stainless steel thermostatic diaphragm element
- optimum function
- long diaphragm life
- high pressure resistance

Stainless steel double contact bulb
- straightforward and fast installation
- good heat transfer from bulb to pipe

Adjustable superheat type (TCAE/TCBE)
- accurate setting
- adjustable in operation

Fixed superheat type (TCCE)

Filter with high dirt retention capacity

Available with self-cleaning bleed

Available with MOP (Max. Operating Pressure)

Max. bulb temperature	212°F
Max. valve body temperature	250°F
Short-lived peak	300°F
Max. working pressure (excl. R410A)	PB = 500 psig
Max. working pressure, R410A	PB = 615 psig
Max. test pressure (excl. R410A)	p' = 540 psig
Max. test pressure, R410A	p' = 680 psig

Bi-flow operation
- With flow in the opposite direction, the rated capacity is reduced by up to 15%.
- TC with orifice no. 3, cannot be used for bi-flow operation.

© Danfoss Inc. 01-07 (USCO)

Ordering-TCAE, straightway

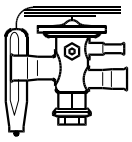

Thermostatic element without orifice and with bulb strap R22, R134a, R404A, R507, R407C, R410A								
Refrigerant	Type	Pressure equalization	Connection Inlet x outlet	Code no.				
				Range N –40/+50°F		Range NM –40/–25°F	Range B –75/–15°F	
			in.	without MOP	MOP+60°F	MOP +32°F	without MOP	MOP–4°F
R22	TCAE	ext. 1/4 in.	3/8 x 5/8	068U4280	068U4282	068U4288		
			½ x 5/8	068U4281	068U4283	068U4289		
R134a			3/8 x 5/8	068U4292	068U4294	068U4300		
			½ x 5/8	068U4293	068U4295	068U4301		
R404A R507			3/8 x 5/8	068U4304	068U4306	068U4312	068U4316	068U4318
			½ x 5/8	068U4305	068U4307	068U4313	068U4317	068U4319
R407C			3/8 x 5/8	068U4324	068U4326	068U4332		
			½ x 5/8	068U4325	068U4327	068U4333		
R410A			3/8 x 5/8	068U4336	068U4338	068U4344		
			½ x 5/8	068U4337	068U4339	068U4345		

Capillary tube length 59 in.

Ordering-TCAE, orifice assembly

With filter and gasket		
Orifice [1]	Bleed%	Code no.
1	0	068U4100
1	15	068U4097
2	0	068U4101
2	15	068U4098
3	0	068U4102
3	15	068U4099

1) TC with orifice no. 3, cannot be used for bi-flow operation.

Spare parts

Filter (24 pcs): **068U0016**
Gaskets (24 pcs): **068U0015**

Note: To secure tightness, the orifice gasket must be changed each time the orifice is disassembled.

Ordering-TCBE, straightway

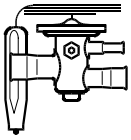

Thermostatic expansion valve with bulb strap R22, R134a, R404A, R507, R407C, R410A							
Refrigerant	Type	Rated capacity [2]	Orifice no. [1]	Pressure equalization	Connection Inlet x outlet	Code no.	
						Range N –40°F	
		TR			in. x in.	without MOP	MOP +60°F
R22	TCBE	5	1	ext. 1/4 in.	3/8 x 5/8	068U4200	068U4204
		5	1		½ x 5/8	068U4201	068U4205
		6	2		½ x 5/8	068U4202	068U4206
		7.5	3		½ x 5/8	068U4203	068U4207
R134a		3.5	1		3/8 x 5/8	068U4216	068U4220
		3.5	1		½ x 5/8	068U4217	068U4221
		4.1	2		½ x 5/8	068U4218	068U4222
		5.2	3		½ x 5/8	068U4219	068U4223
R404A R507		3.8	1		3/8 x 5/8	068U4232	068U4236
		3.8	1		½ x 5/8	068U4233	068U4237
		4.5	2		½ x 5/8	068U4234	068U4238
		5.7	3		½ x 5/8	068U4235	068U4239
R407C		5.4	1		3/8 x 5/8	068U4248	068U4252
		5.4	1		½ x 5/8	068U4249	068U4253
		6.5	2		½ x 5/8	068U4250	068U4254
		8.1	3		½ x 5/8	068U4251	068U4255
R410A		6.5	1		3/8 x 5/8	068U4264	068U4268
		6.5	1		½ x 5/8	068U4265	068U4269
		7.8	2		½ x 5/8	068U4266	068U4270
		9.8	3		½ x 5/8	068U4267	068U4271

Capillary tube length 36 in.
1)TC with orifice no. 3, cannot be used for biflow operation. 2) The rated capacity is based on ARI 750-01.

Introduction

Type TUB 1/4 to 4 1/2 (R22)

The TU series of thermostatic expansion valves is specifically developed for installing into hermetic refrigeration systems.

TU valves are offered in rated capacities up to 4.5 TR(R22) and can be used in a wide range of applications.

The TU is made of stainless steel and therefore is well-suited to refrigeration systems for aggressive environments and for the food industry.

TUB, TUBE
- Internal (TUB) or external (TUBE) equalization
- Fixed orifice and strainer
- Adjustable superheat
- Angleway body

Detail

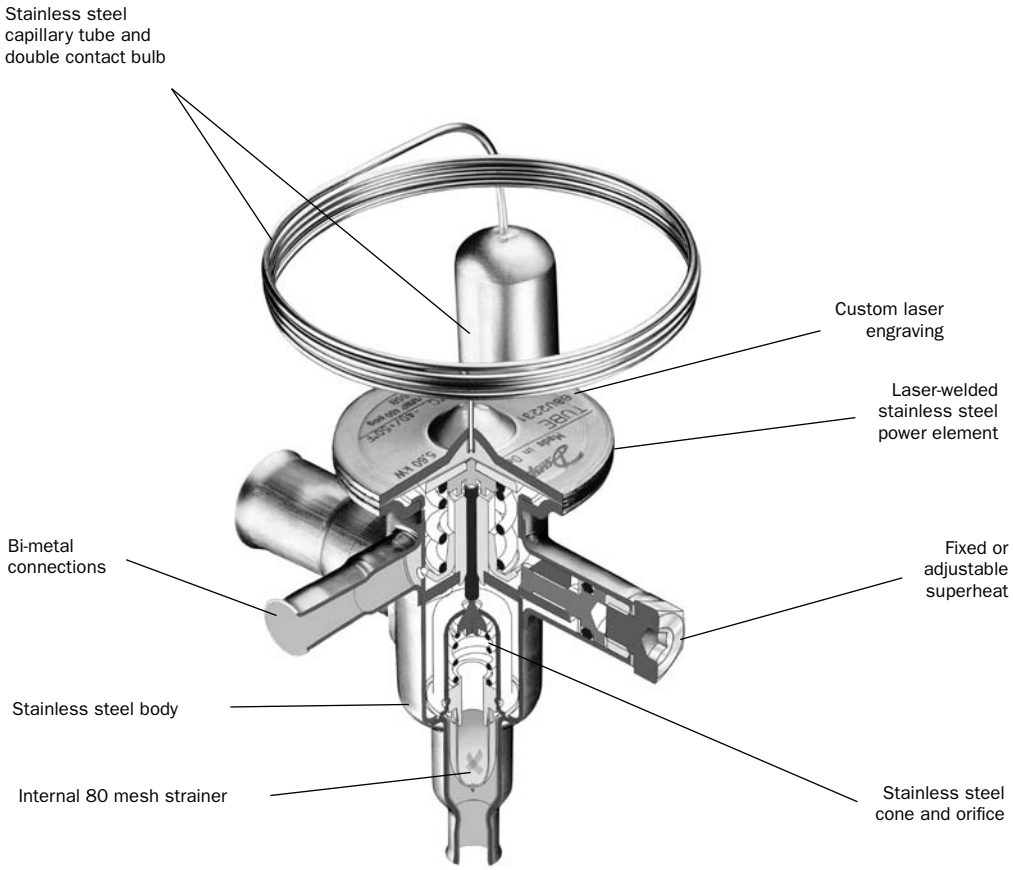

© Danfoss Inc. 01-07 (USCO)

Features

Stainless steel
- High body strength
- High corrosion resistance
- Highly vibration-resistant, flexible capillary tube

40% reserve capacity over nominal rating
- Reduces pulldown time after defrost compared to conventional TXV's.

Bi-metal connections
- Fast and easy soldering without the need for a wet cloth.

Precision Port design
Four major features contributing to superior repeatable performance over an extended valve life:
- Laser-welded power element insures diaphragm's structural integrity and lengthens life.
- Precision-machined push-rod and bushing avoid the need for a packing gland.
- Free-floating push-rod is self-aligning and eliminates binding.
- Precision-machined cone and orifice accurately meter refrigerant under all operating conditions.

Stainless steel capillary tube
- Tolerates more bending for easier installation and longer life.
- Greater resistance to vibration during operation.

Stainless steel double-contact bulb
- Self-aligning for fast and easy installation; secures with a single strap or Quick Clip.
- More contact surface for better heat transfer.

Built-in Strainer

Angleway valve body:
- Unique 80 mesh strainer design capable of retaining more than twice the amount of dirt compared to that of a conventional design without restricting flow.

Compact design
- Small footprint and light weight for compact installation.

Laser engraving:
- Durable positive valve identification; no labels to peel off over time.

Patented superheat adjustment device:
- *Adjust with $^5/_{32}$ in. Allen wrench.*

Versions with optional self-cleaning bleed port available

Bi-flow operation

Optional Quick Clip bulb fastener
- For fast and easy installation.

Cap tube length 2.6' (5' optional)

Danfoss also offers a wide range of options that makes possible countless valve combinations.

Maximum bulb temperature: 212°F

Maximum valve body temperature: 250°F

Short-lived peak: 300°F

Maximum working pressure (excl. R410A):
- MWP = 500 psig

Maximum working pressure, R410A:
- MWP = 615 psig

Maximum test pressure (excl. R410A):
- p' = 540 psig

Maximum test pressure, R410A:
- p' = 680 psig

Capillary tube length:
- 2.6 or 5 ft.

Standard static superheat setting, Range N (R22, R134a, R404A, R407C, R410A) = 9°F

Range N (R507) = 11°F

Standard refrigerants:
- R22, R134a, R404A, R407C, R410A and R507

TU valves are continually evaluated for use with newer refrigerants. For more information, please contact Danfoss.

Metric conversions
1 psi = 0.07 bar
$^5/_9$ (t_1°F – 32) = t_2°C
1 ton = 3.5 kW
1 in. = 25.4 mm
1 ft = 0.3 m
1 lb = 0.454 kg
1 oz = 28.35
US gal/min = 0.86 m³/h

Thermostatic charge options

In addition to the standard range, TU is also available with the following range options:

Range N:	–40 to +50°F	MOP +60°F
Range NM:	–40 to +25°F	MOP +32°F
Range B [1)]	–75 to –15°F	
Range B [1)]	–75 to –15°F	MOP –4°F

1) TU valves for range B are not supplied for R134a.

Ordering

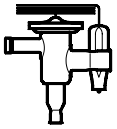

Angleway valve body with 2.6 ft. cap. tube and bulb strap[1]
Range N: –40 to +50°F (without MOP)

Valve type	Connection Solder ODF inlet × outlet in.	Press. equal.	Orifice no.[2]	R22 Range N –40 to +50°F Rated capacity TR[3]	R22 Range N –40 to +50°F Code no.	R134a Range N –40 to +50°F Rated capacity TR[3]	R134a Range N –40 to +50°F Code no.	R404A/R507 Range N –40 to +50°F Rated capacity TR[3]	R404A/R507 Range N –40 to +50°F Code no.	R407C Range N –40 to +50°F Rated capacity TR[3]	R407C Range N –40 to +50°F Code no.	R410A Range N –40 to +50°F Rated capacity TR[3]	R410A Range N –40 to +50°F Code no.
TUB	$^1/_4 \times {}^1/_2$	Int.	1	0.25	**068U2057**	0.19	**068U2027**	0.19	**068U2094**			0.40	**068U1958**
			2	0.36	**068U2058**	0.28	**068U2028**	0.28	**068U2095**			0.60	**068U1959**
			3	0.50	**068U2059**	0.39	**068U2029**	0.39	**068U2096**			0.80	**068U1960**
			4	0.75	**068U2060**	0.59	**068U2030**	0.60	**068U2097**			1.30	**068U1961**
			5	1.00	**068U2061**	0.78	**068U2031**	0.79	**068U2098**			1.70	**068U1962**
			6	1.50	**068U2062**	1.20	**068U2032**	1.20	**068U2099**			2.50	**068U1963**
	$^3/_8 \times {}^1/_2$		1	0.25	**068U2157**								
			2	0.36	**068U2179**								
			3	0.50	**068U2180**								
			4	0.75	**068U2183**								
			5	1.00	**068U2181**								
			6	1.50	**068U2182**								
			7	2.00	**068U2063**								
			8	3.00	**068U2064**								
TUBE	$^1/_4 \times {}^1/_2$	Ext. $^1/_4$ in. solder ODF	1					0.19	**068U2103**				
			2					0.28	**068U2104**				
			3			0.39	**068U2020**	0.39	**068U2105**				
			4	0.75	**068U2070**	0.59	**068U2021**	0.60	**068U2106**				
			5	1.00	**068U2071**	0.78	**068U2022**	0.79	**068U2107**	1.10	**068U1935**		
			6	1.50	**068U2072**	1.20	**068U2023**	1.20	**068U2108**	1.60	**068U1936**		
	$^3/_8 \times {}^1/_2$		1	0.25	**068U2159**								
			2	0.36	**068U2160**								
			3	0.50	**068U2161**								
			4	0.75	**068U2162**								
			5	1.00	**068U2163**								
			6	1.50	**068U2164**								
			7	2.00	**068U2073**	1.60	**068U2024**	1.60	**068U2109**	2.10	**068U1937**	3.40	**068U1973**
			8	3.00	**068U2074**	2.30	**068U2025**	2.40	**068U2110**	3.20	**068U1938**	5.00	**068U1974**
			9	4.50	**068U2075**	3.50	**068U2026**	3.50	**068U2111**	4.80	**068U1939**	7.50	**068U1975**

Metric conversions
1 psi = 0.07 bar
$^5/_9$ (t_1°F – 32) = t_2°C
1 ton = 3.5 kW
1 in. = 25.4 mm

1) The TUB series is also available with 5 ft. cap. tube.
Please contact Danfoss for further information.
2) All TUB and TUBE valves with orifice #9 cannot be used for bi-flow operation.
3) According to ARI 750-01
Rated capacities for range N are based on:
Liquid temperature ahead of expansion valve t_l = 100°F
Evaporating temperature t_e = 40°F
Pressure drop across valve Δ p = 60 psi for R134a
Pressure drop across valve Δ p = 100 psi for R22, R404A, R407C and R507
Pressure drop across valve Δ p = 160 psi for R410A

© Danfoss Inc. 01-07 (USCO)

Features

Choose from five Danfoss Minimizer Service Kits. Each has six expansion valve bodies and a selection of orifices to cover a wide range of capacities for three refrigerants.

Valve Series	Connection Type	**Service Kit Code no.**	Valve Refrigerants
T2	Flare x Flare	**000MMK-A** **000MMK-I**	R12, R22, R502 R22, R134a, R404A/R507
TUA	Sweat x Sweat	**000MMK-U**	R22, R134a, R404A/R507

Capacity selection charts and a pressure–temperature slide rule are included in each kit. Create your own custom kits by ordering the case and your selection of valves separately.

Service Kit	**Code no.**
T2	**00MMKBOX01**
TUA	**00MMKBOX02**

Each case contains a valve capacity table.
This case does not come with valves and orifices.

T2 and TE2

Selection Chart for Thermostatic Expansion Valves

Choose valve by refrigerant and style, then read down to the required capacity in tons and select orifice.

			R12	R502	R22	R134a	R404A
Flare Style Valves (Internally Equalized)		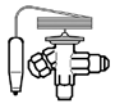	TF2 **068Z3202**	TY2 **068Z3212**	TX2 **068Z3206**	TN2 **068Z3346**	TS2 **068Z3400**
Flare Style Valves (Externally Equalized)			TEF2 **068Z3204**	TEY2 **068Z3215**	TEX2 **068Z3209**	TEN2 **068Z3348**	TES2 **068Z3403**
Sweat Style Valves (Internally Equalized)		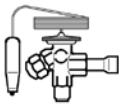	TF2 **068Z3280**	TY2 **068Z3282**	TX2 **068Z3281**	TN2 **068Z3383**	TS2 **068Z3414**
Sweat Style Valves (Externally Equalized)			TEF2 **068Z3283**	TEY2 **068Z3285**	TEX2 **068Z3284**	TEN2 **068Z3385**	TES2 **068Z3415**
Orifice no.	**Code no. (flare)**	**Code no. (sweat)**	Nominal Capacity*				
0X	**068-2002**	**068-2089**			$^1/_5$	$^1/_{10}$	$^1/_{10}$
00	**068-2003**	**068-2090**	$^1/_5$	$^1/_5$	$^1/_3$	$^1/_4$	$^1/_5$
01	**068-2010**	**068-2091**	$^1/_3$	$^1/_3$	$^7/_{10}$	$^1/_2$	$^1/_3$
02	**068-2015**	**068-2092**	$^1/_2$	$^1/_2$	1	$^3/_4$	$^1/_2$
03	**068-2006**	**068-2093**	1	1	1 $^1/_2$	1 $^1/_4$	1
04	**068-2007**	**068-2094**	1 $^1/_2$	1 $^1/_2$	2 $^1/_3$	1 $^3/_4$	1 $^1/_2$
05	**068-2008**	**068-2095**	2	2	3	2 $^1/_4$	2
06	**068-2009**	**068-2096**	3	3	4 $^1/_2$	3	3

Solder adapters for Sweat Style valves:
068-2062 for $^1/_4$" OD pipe
068-2060 for $^3/_8$" OD pipe

*Valve capacity is rated at 40°F evaporating temperature, 90°F condensing temperature, and 80°F refrigerant temperature ahead of valve.

© Danfoss Inc. 01-07 (USCO)

Danfoss Minimizer-Sweat

Select Valve Body and Orifice Size This Kit contains TU type expansion valves which have Sweat (ODF) connections

		R22	R134a	R404A/R507
Internally Equalized Valve Bodies		TUA **068U2235**	TUA **068U2205**	TUA **068U2285**
Externally Equalized Valve Bodies		TUAE **068U2237**	TUAE **068U2207**	TUAE **068U2287**
Orifice size	**Code no.**	Nominal Capacity (Tons) for –40 to +50°F Range		
0	**068U1030**	1/6	1/8	1/8
1	**068U1031**	1/4	1/5	1/5
2	**068U1032**	1/3	1/4	1/4
3	**068U1033**	1/2	1/3	1/3
4	**068U1034**	3/4	1/2	1/2
5	**068U1035**	1	3/4	3/4
6	**068U1036**	1 1/2	1	1
7	**068U1037**	2	1 1/2	1 1/2
8	**068U1038**	3	2	2 1/4
9	**068U1039**	4 1/2	3	3 1/2

Refill the Kit

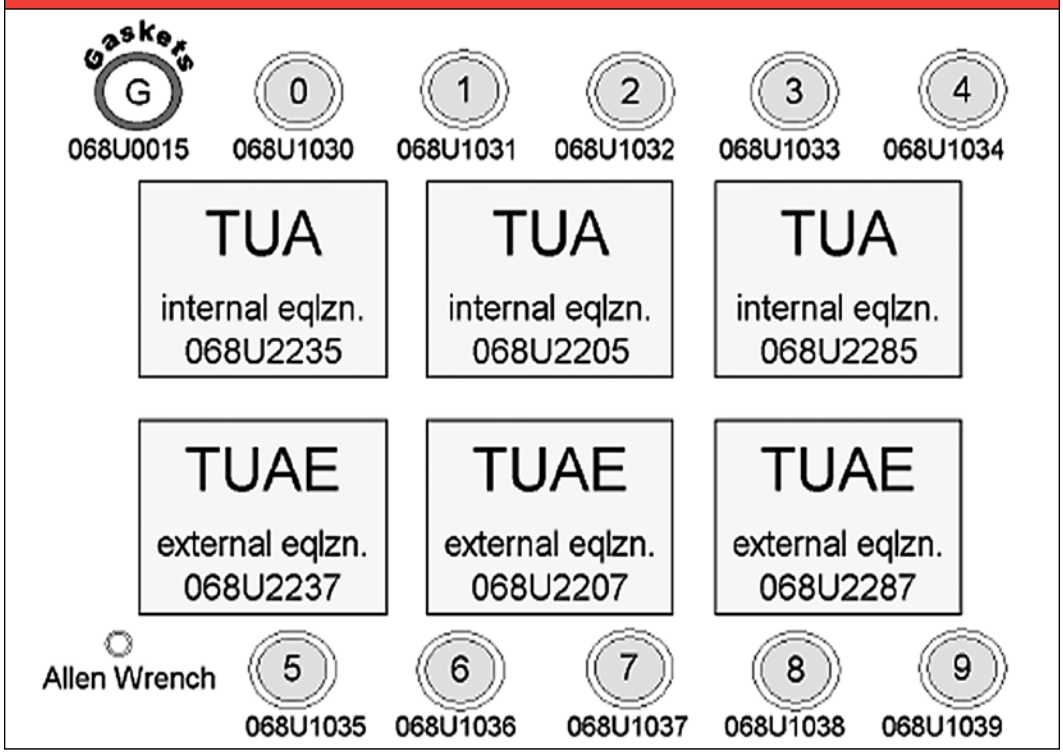

Danfoss Minimizer-Flare

Select Valve Body and Orifice Size

		R22	R134a	R404A/R507
Internally Equalized		TX2 **068Z3206**	TN2 **068Z3346**	TS2 **068Z3400**
Externally Equalized		TEX2 **068Z3209**	TEN2 **068Z3348**	TES2 **068Z3403**
Orifice size	**Code no.**	Nominal Capacity (Tons) for –40 to –10°F Range		
0X	**068-2002**	1/6	1/10	1/10
00	**068-2003**	1/3	1/4	1/5
01	**068-2010**	3/4	1/2	1/3
02	**068-2015**	1	3/4	1/2
03	**068-2006**	1 1/2	1 1/3	1
04	**068-2007**	2 1/3	1 3/4	1 1/2
05	**068-2008**	3	2 1/5	2
06	**068-2009**	4 1/2	3	3

Refill the Kit

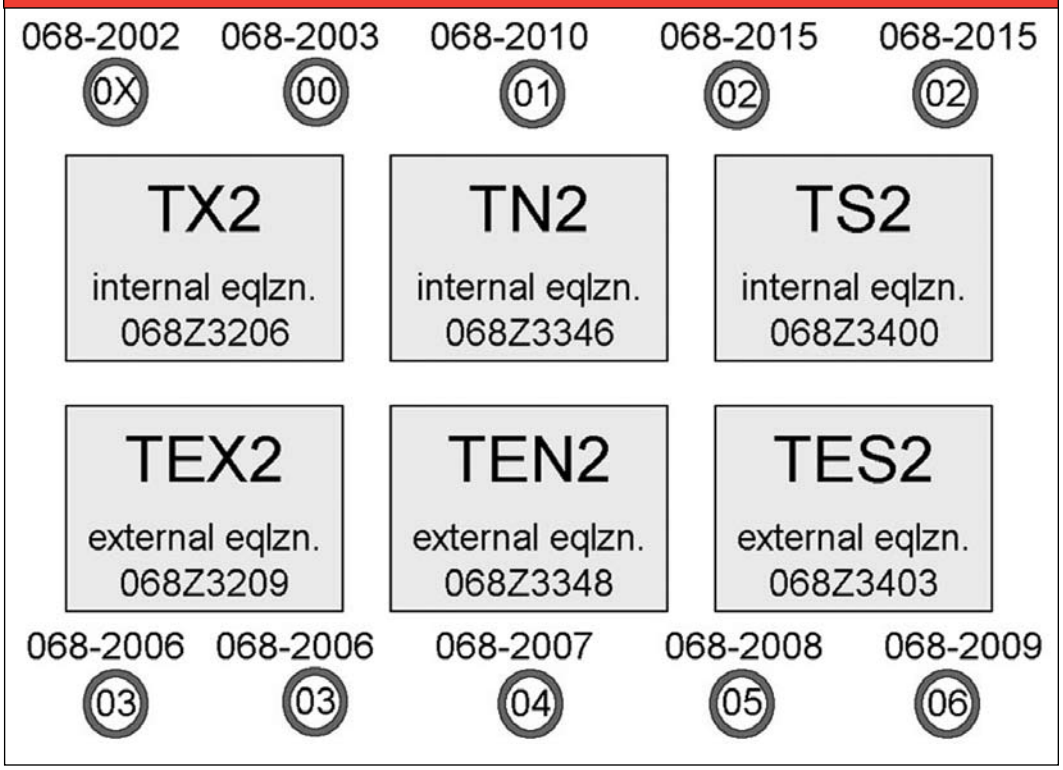

© Danfoss Inc. 01-07 (USCO)

Introduction

Building on the success of the Minimizer kit --

Every TEV you need - both flare and sweat - in one convenient kit

- 12 valves and 20 orifices = 105 size combinations from $^1/_{10}$ to $4^1/_2$ TR
- Cut out unnecessary supply house runs - the right valve is always on the truck
- Sweat valves have bi-metal connections - no wet wrap required
- Factory superheat setting - no adjustment after assembly
- Sizing and selection chart
- Durable fitted case
- Easy to refill

Ordering

Product	Code no.	Product	Code no.
TX2	**068Z3206**	TUA R22	**068U2235**
TEX2	**068Z3209**	TUAE R22	**068U2237**
TN2	**068Z3346**	TUA R134a	**068U2205**
TEN2	**068Z3348**	TUAE R134a	**068U2207**
TS2	**068Z3400**	TUA R404A/507	**068U2285**
TES2	**068Z3403**	TUAE R404A/507	**068U2287**
TE Orifice no. 0X	**068-2002**	TU Orifice no. 0	**068U1030**
TE Orifice no. 00	**068-2003**	TU Orifice no. 1	**068U1031**
TE Orifice no. 01	**068-2010**	TU Orifice no. 2	**068U1032**
TE Orifice no. 02	**068-2015**	TU Orifice no. 3	**068U1033**
TE Orifice no. 03	**068-2006**	TU Orifice no. 4	**068U1034**
TE Orifice no. 04	**068-2007**	TU Orifice no. 5	**068U1035**
TE Orifice no. 05	**068-2008**	TU Orifice no. 6	**068U1036**
TE Orifice no. 06	**068-2009**	TU Orifice no. 7	**068U1037**
TU Metal Gasket	**068U0015**	TU Orifice no. 8	**068U1038**
Allen Wrench	**WRENCH**	TU Orifice no. 9	**068U1039**

Orifice Selection

Select Valve Body and Orifice Size-Flare				
		R22	R134a	R404A/R507
Internally Equalized Valve Bodies		TX2 **068Z3206**	TN2 **068Z3346**	TS2 **068Z3400**
Externally Equalized Valve Bodies		TEX2 **068Z3209**	TEN2 **068Z3348**	TES2 **068Z3403**
Orifice size	**Code no.**	Nominal Capacity (Tons) for –40 to +50°F Range		
0X	**068-2002**	$^1/_6$	$^1/_{10}$	$^1/_{10}$
00	**068-2003**	$^1/_3$	$^1/_4$	$^1/_5$
01	**068-2010**	$^3/_4$	$^1/_2$	$^1/_3$
02	**068-2015**	1	$^3/_4$	$^1/_2$
03	**068-2006**	$1\ ^1/_2$	$1\ ^1/_4$	1
04	**068-2007**	$2\ ^1/_3$	$1\ ^3/_4$	$1\ ^1/_2$
05	**068-2008**	3	$2\ ^1/_4$	2
06	**068-2009**	$4\ ^1/_2$	3	3

Orifice Selection *(continued)*

Select Valve Body and Orifice Size-Sweat

		R22	R134a	R404A/R507
Internally Equalized Valve Bodies		TUA **068U2235**	TUA **068U2205**	TUA **068U2285**
Externally Equalized Valve Bodies		TUAE **068U2237**	TUAE **068U2207**	TUAE **068U2287**
Orifice size	**Code no.**	Nominal Capacity (Tons) for –40 to +50°F Range*		
0	**068U1030**	1/6	1/8	1/8
1	**068U1031**	1/4	1/5	1/5
2	**068U1032**	1/3	1/4	1/4
3	**068U1033**	1/2	1/3	1/3
4	**068U1034**	3/4	1/2	1/2
5	**068U1035**	1	3/4	3/4
6	**068U1036**	1 1/2	1	1
7	**068U1037**	2	1 1/2	1 1/2
8	**068U1038**	3	2	2 1/4
9	**068U1039**	4 1/2	3	3 1/2

Refill the Kit

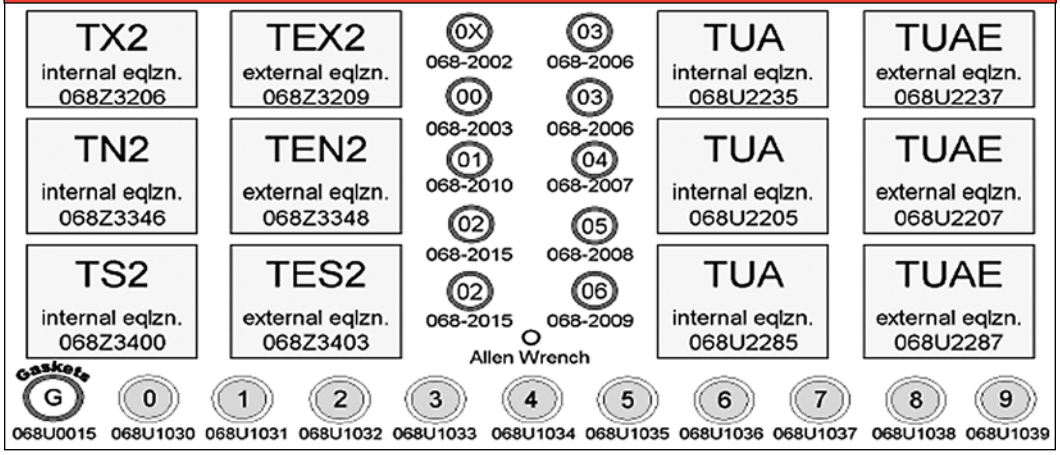

*Valve capacity provided on page 11.

© Danfoss Inc. 01-07 (USCO)

Introduction

TDE Range 3-7$^1/_2$ TR (R22), TDEB Range 8-40 TR (R22)

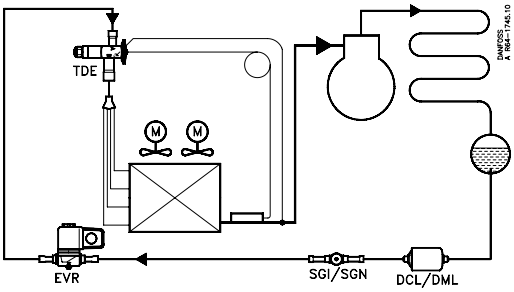

The TDE series of thermostatic expansion valves is designed for use in:
- Air conditioning systems
- Heat pumps
- Water chillers
- Refrigerated containers
- Traditional refrigeration systems

The TDE product programs consist of two hermetic valve designs:
- Single port (type TDE) and balanced port (type TDEB). Valve selection is determined by the application and the capacity required.

Single port version (type TDE)
- The single port's simplified construction is designed for use on systems with small capacities (3 to 7.5 TR R22). Single port design is effective because in smaller capacities condensing pressure is negligible. Type TDE single port valves can also be used for bi-flow applications in the same capacity range.

Balanced port versions (type TDEB)
- The balanced port design has been developed for large capacity systems (greater than 8 to 40 TR) where fluctuating condensing pressures are present.
- The balanced port feature eliminates any influence by condensing pressure on the expansion valve function in the normal flow direction.
- The TDEB design is unique in that it also provides a balance function in the reverse flow direction making it ideal for use in bi-flow applications.

All TDE valves are available with a selection of bulb charges with or without maximum operating pressure (MOP) function.
Single and industrial pack quantities are available.

Features

Hermetically sealed solder valves
- Reduces the possibility of leaks in your system

Laser-welded, stainless steel thermostatic element
- Provides longer diaphragm life, protection against corrosion and optimum pressure strength

Bi-flow function
- Reduces installation costs by reducing the number of valves required in a heat pump application

Patented double-contact bulb
- Allows for quick and easy installation and provides for good heat transfer between pipe and sensor

Available Refrigerants
- R22, R407C, R134a (special order)

Versions available with:
- Maximum operating pressure (MOP) function
- Bi-flow function

Ordering

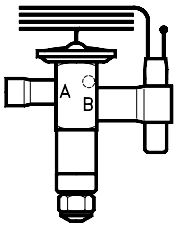

Metric conversions
1 psi = 0.07 bar
$^5/_9$ (t_1°F – 32) = t_2°C
1 ton = 3.5 kW
1 in. = 25.4 mm

R22

Range K = –15 to 50°F with MOP 100 psig		
Type and rated capacity [1] TR	Connection solder ODF × ODF in.	**Code no. Multipack**
TDEX 3 - 7.5 Single port		
TDEX 3	$^3/_8 \times ^5/_8$	**068H6200**
TDEX 3	$^1/_2 \times ^5/_8$	**068H6201**
TDEX 4	$^1/_2 \times ^7/_8$	**068H6202**
TDEX 6	$^1/_2 \times ^5/_8$	**068H6234**
TDEX 6	$^1/_2 \times ^7/_8$	**068H6203**
TDEX 6	$^5/_8 \times ^7/_8$	**068H6204**
TDEX 7.5	$^5/_8 \times ^7/_8$	**068H6205**
TDEBX 20 - 40 Balanced port		
TDEBX 20	$^7/_8 \times 1^1/_8$	**068H7146**
TDEBX 26	$^7/_8 \times 1^3/_8$	**068H7148**
TDEBX 30	$^7/_8 \times 1^3/_8$	**068H7150**
TDEBX 30	$1^1/_8 \times 1^3/_8$	**068H7152**
TDEBX 40	$1^1/_8 \times 1^3/_8$	**068H7154**

Range K = –15 to 50°F with MOP 100 psig		
Type and rated capacity [1] TR	Connection solder ODF × ODF in.	**Code no. Multipack**
TDEBX 8 - 19 Balanced port		
TDEBX 8	$^5/_8 \times ^7/_8$	**068H7130**
TDEBX 11	$^5/_8 \times ^7/_8$	**068H7132**
TDEBX 11	$^5/_8 \times 1^1/_8$	**068H7134**
TDEBX 12.5	$^5/_8 \times ^7/_8$	**068H7136**
TDEBX 12.5	$^5/_8 \times 1^1/_8$	**068H7138**
TDEBX 16	$^5/_8 \times 1^1/_8$	**068H7140**
TDEBX 16	$^7/_8 \times 1^1/_8$	**068H7142**
TDEBX 19	$^7/_8 \times 1^1/_8$	**068H7144**

1)The rated capacity is based on:
Evaporating temperature t_e = 40°F
Liquid temperature t_l = 80°F
Condensing temperature t_c = 90°F

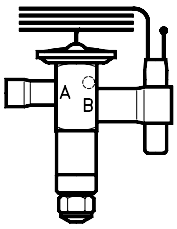

R22

Range AC = 15 to 60°F with MOP 120 psig		
Type and rated capacity [1] TR	Connection solder ODF × ODF in.	**Code no. Multipack**
TDEX 3 - 7.5 Single port		
TDEX 3	$^3/_8 \times ^5/_8$	**068H6100**
TDEX 3	$^1/_2 \times ^5/_8$	**068H6101**
TDEX 4	$^1/_2 \times ^7/_8$	**068H6102**
TDEX 6	$^1/_2 \times ^5/_8$	**068H6134**
TDEX 6	$^1/_2 \times ^7/_8$	**068H6103**
TDEX 6	$^5/_8 \times ^7/_8$	**068H6104**
TDEX 7.5	$^5/_8 \times ^7/_8$	**068H6105**
TDEBX 20 - 40 Balanced port		
TDEBX 20	$^7/_8 \times 1^1/_8$	**068H7116**
TDEBX 26	$^7/_8 \times 1^3/_8$	**068H7118**
TDEBX 30	$^7/_8 \times 1^3/_8$	**068H7120**
TDEBX 30	$1^1/_8 \times 1^3/_8$	**068H7122**
TDEBX 40	$1^1/_8 \times 1^3/_8$	**068H7124**

Range AC = 15 to 60°F with MOP 120 psig		
Type and rated capacity [1] TR	Connection solder ODF × ODF in.	**Code no. Multipack**
TDEBX 8 - 19 Balanced port		
TDEBX 8	$^5/_8 \times ^7/_8$	**068H7100**
TDEBX 11	$^5/_8 \times ^7/_8$	**068H7102**
TDEBX 11	$^5/_8 \times 1^1/_8$	**068H7104**
TDEBX 12.5	$^5/_8 \times ^7/_8$	**068H7106**
TDEBX 12.5	$^5/_8 \times 1^1/_8$	**068H7108**
TDEBX 16	$^5/_8 \times 1^1/_8$	**068H7110**
TDEBX 16	$^7/_8 \times 1^1/_8$	**068H7112**
TDEBX 19	$^7/_8 \times 1^1/_8$	**068H7114**

1) The rated capacity is based on:
Evaporating temperature t_e = 40°F
Liquid temperature t_l = 80°F
Condensing temperature t_c = 90°F

© Danfoss Inc. 01-07 (USCO)

Ordering *(continued)*

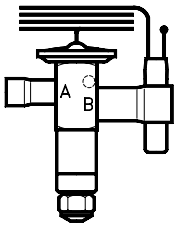

R22

Range N = –40 to 50°F		
Type and rated capacity [1] TR	Connection solder ODF × ODF in.	**Code no. Multipack**
TDEX 3 - 7.5 Single port		
TDEX 3	$^3/_8 \times ^5/_8$	**068H7050**
TDEX 3	$^1/_2 \times ^5/_8$	**068H7052**
TDEX 4	$^1/_2 \times ^7/_8$	**068H7054**
TDEX 6	$^1/_2 \times ^5/_8$	**068H7056**
TDEX 6	$^1/_2 \times ^7/_8$	**068H7058**
TDEX 6	$^5/_8 \times ^7/_8$	**068H7060**
TDEX 7.5	$^5/_8 \times ^7/_8$	**068H7062**
TDEBX 20 - 40 Balanced port		
TDEBX 20	$^7/_8 \times 1^1/_8$	**068H7080**
TDEBX 26	$^7/_8 \times 1^3/_8$	**068H7082**
TDEBX 30	$^7/_8 \times 1^3/_8$	**068H7084**
TDEBX 30	$1^1/_8 \times 1^3/_8$	**068H7086**
TDEBX 40	$1^1/_8 \times 1^3/_8$	**068H7088**

Range N = –40 to 50°F		
Type and rated capacity [1] TR	Connection solder ODF × ODF in.	**Code no. Multipack**
TDEBX 8 - 19 Balanced port		
TDEBX 8	$^5/_8 \times ^7/_8$	**068H7064**
TDEBX 11	$^5/_8 \times ^7/_8$	**068H7066**
TDEBX 11	$^5/_8 \times 1^1/_8$	**068H7068**
TDEBX 12.5	$^5/_8 \times ^7/_8$	**068H7070**
TDEBX 12.5	$^5/_8 \times 1^1/_8$	**068H7072**
TDEBX 16	$^5/_8 \times 1^1/_8$	**068H7074**
TDEBX 16	$^7/_8 \times 1^1/_8$	**068H7076**
TDEBX 19	$^7/_8 \times 1^1/_8$	**068H7078**

1) The rated capacity is based on:
Evaporating temperature t_e = 40°F
Liquid temperature t_l = 80°F
Condensing temperature t_c = 90°F

Metric conversions
1 psi = 0.07 bar
$^5/_9$ (t_1°F – 32) = t_2°C
1 ton = 3.5 kW
1 in. = 25.4 mm

R407C

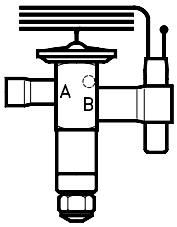

Range K = –15 to 50°F with MOP 95 psig		
Type and rated capacity [1] TR	Connection solder ODF × ODF in.	**Code no. Multipack**
TDEX 3 - 7.5 Single port		
TDEZ 3	$^3/_8 \times ^5/_8$	**068H7160**
TDEZ 3	$^1/_2 \times ^5/_8$	**068H7161**
TDEZ 4	$^1/_2 \times ^7/_8$	**068H7162**
TDEZ 6	$^1/_2 \times ^5/_8$	**068H7163**
TDEZ 6	$^1/_2 \times ^7/_8$	**068H7164**
TDEZ 6	$^5/_8 \times ^7/_8$	**068H7165**
TDEZ 7.5	$^5/_8 \times ^7/_8$	**068H7166**
TDEBX 20 - 40 Balanced port		
TDEBZ 20	$^7/_8 \times 1^1/_8$	**068H7191**
TDEBZ 26	$^7/_8 \times 1^3/_8$	**068H7193**
TDEBZ 30	$^7/_8 \times 1^3/_8$	**068H7195**
TDEBZ 30	$1^1/_8 \times 1^3/_8$	**068H7197**
TDEBZ 40	$1^1/_8 \times 1^3/_8$	**068H7199**

Range K = –15 to 50°F with MOP 95 psig		
Type and rated capacity [1] TR	Connection solder ODF × ODF in.	**Code no. Multipack**
TDEBX 8 - 19 Balanced port		
TDEBZ 8	$^5/_8 \times ^7/_8$	**068H7175**
TDEBZ 11	$^5/_8 \times ^7/_8$	**068H7177**
TDEBZ 11	$^5/_8 \times 1^1/_8$	**068H7179**
TDEBZ 12.5	$^5/_8 \times ^7/_8$	**068H7181**
TDEBZ 12.5	$^5/_8 \times 1^1/_8$	**068H7183**
TDEBZ 16	$^5/_8 \times 1^1/_8$	**068H7185**
TDEBZ 16	$^7/_8 \times 1^1/_8$	**068H7187**
TDEBZ 19	$^7/_8 \times 1^1/_8$	**068H7189**

1) The rated capacity is based on:
Evaporating temperature t_e = 40°F
Liquid temperature t_l = 80°F
Condensing temperature t_c = 90°F

Ordering *(continued)*

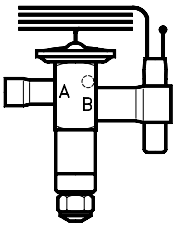

R407C

Range AC = 15 to 60°F with MOP 115 psig		
Type and rated capacity [1] TR	Connection solder ODF × ODF in.	**Code no. Multipack**
TDEX 3 - 7.5 Single port		
TDEZ 3	$^3/_8 \times ^5/_8$	**068H7220**
TDEZ 3	$^1/_2 \times ^5/_8$	**068H7221**
TDEZ 4	$^1/_2 \times ^7/_8$	**068H7222**
TDEZ 6	$^1/_2 \times ^5/_8$	**068H7223**
TDEZ 6	$^1/_2 \times ^7/_8$	**068H7224**
TDEZ 6	$^5/_8 \times ^7/_8$	**068H7225**
TDEZ 7.5	$^5/_8 \times ^7/_8$	**068H7226**
TDEBX 20 - 40 Balanced port		
TDEBZ 20	$^7/_8 \times 1^1/_8$	**068H7251**
TDEBZ 26	$^7/_8 \times 1^3/_8$	**068H7253**
TDEBZ 30	$^7/_8 \times 1^3/_8$	**068H7255**
TDEBZ 30	$1^1/_8 \times 1^3/_8$	**068H7257**
TDEBZ 40	$1^1/_8 \times 1^3/_8$	**068H7259**

Range AC = 15 to 60°F with MOP 115 psig		
Type and rated capacity [1] TR	Connection solder ODF × ODF in.	**Code no. Multipack**
TDEBX 8 - 19 Balanced port		
TDEBZ 8	$^5/_8 \times ^7/_8$	**068H7235**
TDEBZ 11	$^5/_8 \times ^7/_8$	**068H7237**
TDEBZ 11	$^5/_8 \times 1^1/_8$	**068H7239**
TDEBZ 12.5	$^5/_8 \times ^7/_8$	**068H7241**
TDEBZ 12.5	$^5/_8 \times 1^1/_8$	**068H7243**
TDEBZ 16	$^5/_8 \times 1^1/_8$	**068H7245**
TDEBZ 16	$^7/_8 \times 1^1/_8$	**068H7247**
TDEBZ 19	$^7/_8 \times 1^1/_8$	**068H7249**

Metric conversions
1 psi = 0.07 bar
$^5/_9$ (t_1°F – 32) = t_2°C
1 ton = 3.5 kW
1 in. = 25.4 mm

1) The rated capacity is based on:
Evaporating temperature t_e = 40°F
Liquid temperature t_l = 80°F
Condensing temperature t_c = 90°F

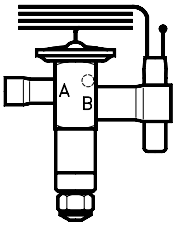

R407C

Range N = – 40 to 50°F		
Type and rated capacity [1] TR	Connection solder ODF × ODF in.	**Code no. Multipack**
TDEX 3 - 7.5 Single port		
TDEZ 3	$^3/_8 \times ^5/_8$	**068H7000**
TDEZ 3	$^1/_2 \times ^5/_8$	**068H7002**
TDEZ 4	$^1/_2 \times ^7/_8$	**068H7004**
TDEZ 6	$^1/_2 \times ^5/_8$	**068H7006**
TDEZ 6	$^1/_2 \times ^7/_8$	**068H7008**
TDEZ 6	$^5/_8 \times ^7/_8$	**068H7010**
TDEZ 7.5	$^5/_8 \times ^7/_8$	**068H7012**
TDEBX 20 - 40 Balanced port		
TDEBZ 20	$^7/_8 \times 1^1/_8$	**068H7030**
TDEBZ 26	$^7/_8 \times 1^3/_8$	**068H7032**
TDEBZ 30	$^7/_8 \times 1^3/_8$	**068H7034**
TDEBZ 30	$1^1/_8 \times 1^3/_8$	**068H7036**
TDEBZ 40	$1^1/_8 \times 1^3/_8$	**068H7038**

Range N = – 40 to 50°F		
Type and rated capacity [1] TR	Connection solder ODF × ODF in.	**Code no. Multipack**
TDEBX 8 - 19 Balanced port		
TDEBZ 8	$^5/_8 \times ^7/_8$	**068H7014**
TDEBZ 11	$^5/_8 \times ^7/_8$	**068H7016**
TDEBZ 11	$^5/_8 \times 1^1/_8$	**068H7018**
TDEBZ 12.5	$^5/_8 \times ^7/_8$	**068H7020**
TDEBZ 12.5	$^5/_8 \times 1^1/_8$	**068H7022**
TDEBZ 16	$^5/_8 \times 1^1/_8$	**068H7024**
TDEBZ 16	$^7/_8 \times 1^1/_8$	**068H7026**
TDEBZ 19	$^7/_8 \times 1^1/_8$	**068H7028**

1) The rated capacity is based on:
Evaporating temperature t_e = 40°F
Liquid temperature t_l = 80°F
Condensing temperature t_c = 90°F

© Danfoss Inc. 01-07 (USCO)

Identification

Essential valve data is given on the element label.

TDEX	= Type (X: refrigerant R22)
8 TR	= Rated capacity Qnom. in Tons of Refrigeration
28 kW	= Rated capacity Qnom. in kW
R22	= Refrigerant
–25/+10 °C	= Evaporating temperature range (°C)
–15/+50 °F	= Evaporating temperature range (°F)
068H4112	= Code number
BP 15	= Bleed 15%
MOP 100	= Max. Operation Pressure
PB 28 bar/ MWP 400 psig	= Max. working pressure
288	= Date marking (week 28, 1998)

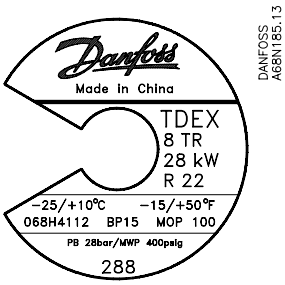

Element label

Dimensions and weights

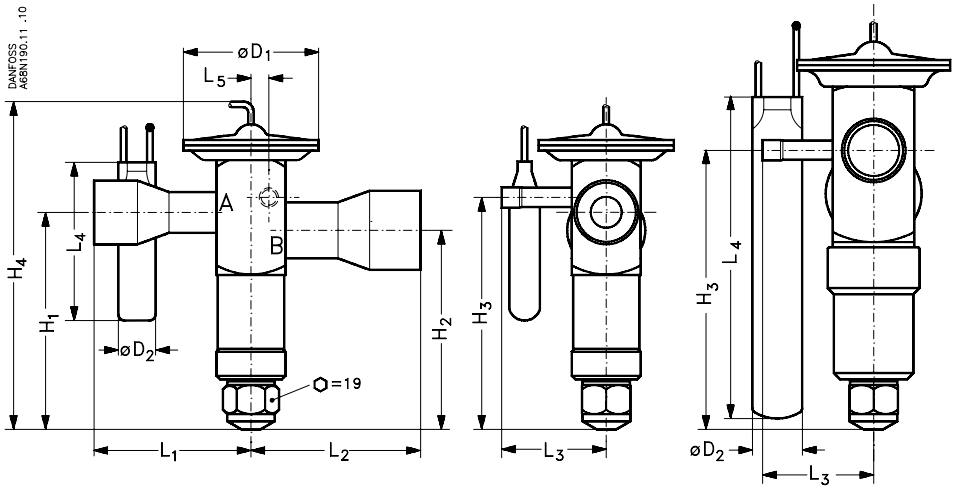

TDE 3 - 7.5, TDEB 8 - 19 TDEB 20 - 40

Type	Connection ODF solder inlet × outlet	Capillary tube length	H_1	H_2	H_3	H_4	L_1	L_2	L_3	L_4	L_5	$ØD_1$	$ØD_2$	Weight
	in.	ft.	in.	in.	in.	in.	in.	in.	in.	in.	in.	in.	in.	lbs.
TDE 3 - 7.5	$^3/_8 \times ^5/_8$	5	2.78	2.54	2.93	4.61	1.61	1.73	1.52	2.44	0.20	1.77	0.55	0.90
	$^1/_2 \times ^5/_8$	5	2.78	2.54	2.93	4.61	1.63	1.73	1.52	2.44	0.20	1.77	0.55	0.90
	$^1/_2 \times ^7/_8$	5	2.78	2.54	2.93	4.61	1.63	2.32	1.52	2.44	0.20	1.77	0.55	0.90
	$^5/_8 \times ^7/_8$	5	2.78	2.54	2.93	4.61	1.73	2.32	1.52	2.44	0.20	1.77	0.55	0.90
TDEB 8 - 19	$^5/_8 \times ^7/_8$	5	3.35	3.07	3.58	5.39	1.83	2.42	1.61	2.44	0.28	2.09	0.55	1.30
	$^5/_8 \times 1\,^1/_8$	5	3.35	3.07	3.58	5.39	1.83	2.62	1.61	2.44	0.28	2.09	0.55	1.30
	$^7/_8 \times 1\,^1/_8$	5	3.35	3.07	3.58	5.39	2.42	2.62	1.61	2.44	0.28	2.09	0.55	1.30
TDEB 20 - 40	$^7/_8 \times 1\,^1/_8$	10	4.31	3.64	4.31	6.69	2.50	2.70	1.71	4.96	0.39	2.36	0.75	2.40
	$^7/_8 \times 1\,^3/_8$	10	4.31	3.64	4.31	6.69	2.50	2.89	1.71	4.96	0.39	2.36	0.75	2.40
	$1\,^1/_8 \times 1\,^3/_8$	10	4.31	3.64	4.31	6.69	2.70	2.89	1.71	4.96	0.39	2.36	0.75	2.40

Introduction

Type TRE 10, TRE 20, TRE 40, and TRE80 Range 8 to 70 TR (R22)

TRE thermostatic expansion valves have been designed and developed for soldering into air-conditioning and refrigeration systems. Their hermetic tight design meets environmental demands for today and the future. They can be used in systems ranging in capacity from 8 to 70 TR (R22).

The TRE design incorporates a forged brass body with the entire power element, including the capillary tube and bulb, fabricated from stainless steel. The straight through bimetal solder connections are formed from deep drawn stainless steel and copper. The valve incorporates a 2-way balanced port orifice making it ideal for bi-flow operation.

External superheat adjustment is a standard feature on all TRE valves. For non-adjustable OEM versions, a setting assembly is available for field retrofit.

Contact Danfoss for further information.

Features

Bimetal connections
- waterless soldering
- quicker installation times
- higher productivity

Developed for R410A
- R22, R407C, R134a, R410A and other fluorinated refrigerants

Laser-welded power element:
- longer diaphragm life
- high pressure tolerance and working pressure

Stainless steel power element, capillary tube and bulb
- high corrosion resistance
- high strength and vibration resistance
- fast installation: self-aligning bulb secures with one strap
- good thermal contact and transmission

Two-way balanced port/bi-flow function
- superheat unaffected by condensing pressure independent of flow direction
- one valve for heat pump service

Stainless steel double contact bulb
- straightforward and fast installation
- good thermal contact and heat transfer

Adjustable/non-adjustable version
- setting spindle assembly can be retrofitted to non-adjustable version

Static superheat, adjustable:
3.6 °F → 10.8 °F

© Danfoss Inc. 01-07 (USCO)

Valve options

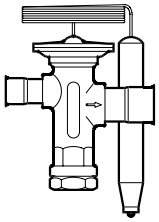

In addition to the standard program, TRE valves are also available with the following options:

Refrigerants - Range - MOP:
Contact Danfoss for information regarding different refrigerants and evaporator ranges.

Static superheat, fixed:
3.6 °F → 10.8 °F

Internal bleed: 15%

Capillary tube length:

Type	Capillary tube length
TRE 10	3 or 5 ft.
TRE 20	3; 5 or 10 ft.
TRE 40	5 or 10 ft.
TRE 80	5 or 10 ft.

Connections:

Type	Inlet ODF solder	Outlet ODF solder
TRE10	$^1/_2$ - $^5/_8$ - $^7/_8$ in.	$^1/_2$ - $^5/_8$ - $^7/_8$ - $1^1/_8$ in.
TRE 20	$^5/_8$ - $^7/_8$ - $1^1/_8$ in.	$^5/_8$ - $^7/_8$ - $1^1/_8$ - $1^3/_8$ in.
TRE 40	$^7/_8$ - $1^1/_8$ in.	$^7/_8$ - $1^1/_8$ - $1^3/_8$ in.
TRE 80	$1^1/_8$ - $1^3/_8$ in.	$1^1/_8$ - $1^3/_8$ - $1^5/_8$ in.

Equalizing connection $^1/_4$ in. or 6 mm ODF on all types.
Sizes in bold type are standard sizes.

Ordering

Valve and bulb strap are supplied in bulk industrial pack or individually in multipack.

The numbers supplied are as follows:

Type	Industrial pack	Multipack
TRE 10	12 pcs	12 pcs
TRE 20	8 pcs	8 pcs
TRE 40	4 pcs	6 pcs
TRE 80	4 pcs	4 pcs

Overview of product range

Capacity TR	Refrigerant		Range	MOP
	Type	Code		
8 - 70	R22	X	K	60°F
8 - 70	R22	X	N	
8 - 85	R410A	L	K	60°F
8 - 85	R410A	L	N	
8 - 70	R407C	Z	K	60°F
8 - 70	R407C	Z	N	
5 - 56	R134a	N	K	60°F
5 - 56	R134a	N	N	

K: –15 → +50°F
N: –40 → +50°F

Ordering

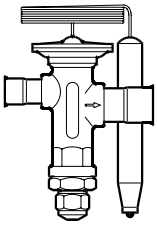

R22, R410A

Standard program

Refrigerant	Type Rated capacity Q_{nom} 1) TR	Rated capacity Q_{nom} 1) TR	Connection ODF solder Inlet in.	Connection ODF solder Outlet in.	Range K –15°/+50°F MOP 60°F Code no. Multi-pack 2)	Range N –40°/+50°F Code no. Multi-pack 2)
R22	TRE10- 8X	8	5/8	7/8	067L1021	067L1121
	TRE10-10X	10	5/8	7/8	067L1024	067L1124
	TRE20-10X	10	5/8	7/8	067L1075	067L1175
	TRE20-12.5X	12.5	5/8	7/8	067L1079	067L1179
	TRE20-15X	15	7/8	1 1/8	067L1084	067L1184
	TRE20-20X	20	7/8	1 1/8	067L1087	067L1187
	TRE20-20X	20	7/8	1 3/8	067L1088	067L1188
	TRE40-20X	20	7/8	1 1/8	067L3001	067L3101
	TRE40-20X	20	7/8	1 3/8	067L3002	067L3102
	TRE40-25X	25	7/8	1 3/8	067L3005	067L3105
	TRE40-25X	25	1 1/8	1 3/8	067L3006	067L3106
	TRE40-30X	30	1 1/8	1 3/8	067L3009	067L3109
	TRE40-40X	40	1 1/8	1 3/8	067L3012	067L3112
	TRE80-40X	40	1 1/8	1 3/8	067L3060	067L3160
	TRE80-55X	55	1 1/8	1 3/8	067L3063	067L3163
	TRE80-70X	70	1 1/8	1 5/8	067L3066	067L3166
R410A	TRE10-8L	8	5/8	5/8	067L1028	067L1128
	TRE10-8L	8	5/8	7/8	067L1029	067L1129
	TRE10-10L	10	5/8	5/8	067L1030	067L1130
	TRE10-10L	10	5/8	7/8	067L1031	067L1131
	TRE10-12.5L	12.5	5/8	5/8	067L1034	067L1134
	TRE10-12.5L	12.5	5/8	7/8	067L1035	067L1135
	TRE10-15L	15	7/8	7/8	067L1038	067L1138
	TRE10-15L	15	7/8	1 1/8	067L1039	067L1139
	TRE20-15L	15	7/8	7/8	067L1091	067L1191
	TRE20-15L	15	7/8	1 1/8	067L1092	067L1192
	TRE20-20L	20	7/8	7/8	067L1093	067L1193
	TRE20-20L	20	7/8	1 1/8	067L1094	067L1194
	TRE20-25L	25	7/8	1 1/8	067L1097	067L1197
	TRE20-25L	25	1 1/8	1 1/8	067L1099	067L1199
	TRE40-25L	25	7/8	1 1/8	067L3015	067L3115
	TRE40-25L	25	1 1/8	1 3/8	067L3016	067L3116
	TRE40-30L	30	1 1/8	1 1/8	067L3019	067L3119
	TRE40-30L	30	1 1/8	1 3/8	067L3020	067L3120
	TRE40-40L	40	1 1/8	1 1/8	067L3023	067L3123
	TRE40-40L	40	1 1/8	1 3/8	067L3024	067L3124
	TRE40-55L	55	1 1/8	1 1/8	067L3027	067L3127
	TRE40-55L	55	1 1/8	1 3/8	067L3028	067L3128
	TRE80-55L	55	1 1/8	1 1/8	067L3069	067L3169
	TRE80-55L	55	1 1/8	1 3/8	067L3070	067L3170
	TRE80-80L	80	1 1/8	1 3/8	067L3073	067L3173
	TRE80-80L	80	1 1/8	1 5/8	067L3074	067L3174
	TRE80-80L	80	1 3/8	1 3/8	067L3075	067L3175
	TRE80-100L	100	1 1/8	1 5/8	067L3078	067L3178
	TRE80-100L	100	1 3/8	1 5/8	067L3079	067L3179

For connections, refrigerants, capillary tube lengths, etc. outside the standard program, see *Valve options* on page 23.

Pressure equalization = 1/4 in. ODF

1) The rated capacity is based on: ARI Standard 750-01
2) Number of valves in industrial and multipacks: (see page 22)

© Danfoss Inc. 01-07 (USCO)

Ordering

R407C, R134a

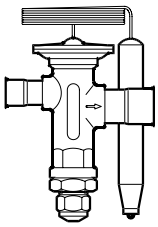

Standard program						
Refrigerant	Type Rated capacity Q_{nom} 1) TR	Rated capacity Q_{nom} 1) TR	Connection ODF solder Inlet in.	Connection ODF solder Outlet in.	Range K –15°/+50°F MOP 60°F **Code no. Multi-pack**2)	Range N –40°/+50°F **Code no. Multi-pack**2)
R407C	TRE10- 8Z	8	5/8	7/8	**067L1012**	**067L1112**
	TRE10-10Z	10	5/8	7/8	**067L1015**	**067L1115**
	TRE20-10Z	10	5/8	7/8	**067L1058**	**067L1158**
	TRE20-12.5Z	12.5	5/8	7/8	**067L1062**	**067L1162**
	TRE20-15Z	15	7/8	1 1/8	**067L1067**	**067L1167**
	TRE20-20Z	20	7/8	1 1/8	**067L1070**	**067L1170**
	TRE20-20Z	20	7/8	1 3/8	**067L1071**	**067L1171**
	TRE40-20Z	20	7/8	1 1/8	**067L3030**	**067L3130**
	TRE40-20Z	20	7/8	1 3/8	**067L3031**	**067L3131**
	TRE40-25Z	25	7/8	1 3/8	**067L3034**	**067L3134**
	TRE40-25Z	25	1 1/8	1 3/8	**067L3035**	**067L3135**
	TRE40-30Z	30	1 1/8	1 3/8	**067L3038**	**067L3138**
	TRE40-40Z	40	1 1/8	1 3/8	**067L3040**	**067L3140**
	TRE80-40Z	40	1 1/8	1 3/8	**067L3082**	**067L3182**
	TRE80-55Z	55	1 1/8	1 3/8	**067L3085**	**067L3185**
	TRE80-70Z	70	1 1/8	1 5/8	**067L3088**	**067L3188**
R134a	TRE10- 5N	5	5/8	7/8	**067L1003**	**067L1103**
	TRE10- 7N	7	5/8	7/8	**067L1006**	**067L1106**
	TRE20- 7N	7	5/8	7/8	**067L1041**	**067L1141**
	TRE20- 9N	9	5/8	7/8	**067L1045**	**067L1145**
	TRE20-11N	11	7/8	1 1/8	**067L1050**	**067L1150**
	TRE20-14N	14	7/8	1 1/8	**067L1053**	**067L1153**
	TRE20-14N	14	7/8	1 3/8	**067L1054**	**067L1154**
	TRE40-14N	14	7/8	1 1/8	**067L3043**	**067L3143**
	TRE40-14N	14	7/8	1 3/8	**067L3044**	**067L3144**
	TRE40-16N	16	7/8	1 3/8	**067L3047**	**067L3147**
	TRE40-16N	16	1 1/8	1 3/8	**067L3048**	**067L3148**
	TRE40-20N	20	1 1/8	1 3/8	**067L3051**	**067L3151**
	TRE40-25N	25	1 1/8	1 3/8	**067L3054**	**067L3154**
	TRE80-25N	25	1 1/8	1 1/8	**067L3091**	**067L3191**
	TRE80-35N	35	1 1/8	1 3/8	**067L3094**	**067L3194**
	TRE80-45N	45	1 1/8	1 5/8	**067L3097**	**067L3197**

For connections, refrigerants, capillary tube lengths, etc. outside the standard program, see *Valve options* on page 23.

Pressure equalization = 1/4 in. ODF

1) According to ARI 750-01
Rated capacities for range N are based on:
Liquid temperature ahead of expansion valve t_l = 100°F
Evaporating temperature t_e = 40°F
Pressure drop across valve Δ p = 60 psi for R134a
Pressure drop across valve Δ p = 100 psi for R22, R404A, R407C and R507
Pressure drop across valve Δ p = 160 psi for R410A

2) Number of valves in industrial and multipacks: (see page 23)

Accessories

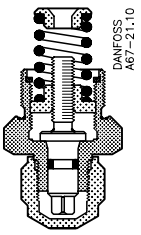

Filter: For mounting in the inlet connection.	
Dimension	**Code no.**
1/2 in.	**067L1281**

Setting spindle assembly: For installation on valves with fixed setting.		
Type	Tightening torque	**Code no.**
TRE10	22 ft lbf	**067L1295**
TRE20	34 ft lbf	**067L1296**
TRE40	49 ft lbf	**067L1297**
TRE80	66 ft lbf	**067L1298**

Note: Spring not included

Dimensions and weight

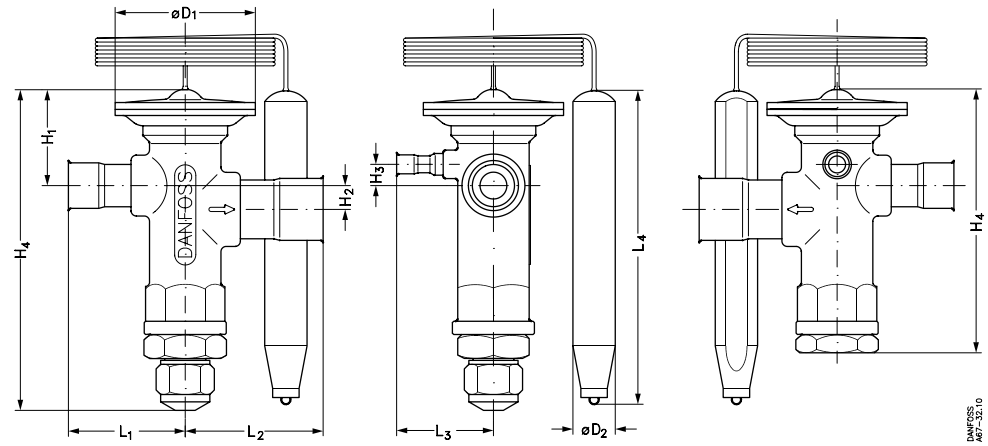

Type	Connection, ODF solder Inlet × Outlet	Capillary tube length	H_1	H_2	H_3	H_4	L_1	L_2	L_3	L_4	$ØD_1$	$ØD_2$	Weight
	in.	ft	in	in	in	in	in	in	in	in	in	in	lbs
TRE 10	1/2 × 1/2	4.92	1.26	0.30	0.20	4.09	1.59	1.59	1.36	2.76	1.77	0.59	0.86
	1/2 × 5/8							1.79					
	5/8 × 1/2						1.79	1.59					
	5/8 × 5/8							1.79					
	5/8 × 7/8					3.23[1]		2.03					0.77[1]
	7/8 × 7/8						2.03	2.03					
	7/8 × 1 1/8							2.31					
TRE 20	5/8 × 5/8	4.92	1.46	0.35	0.31	4.80	1.89	1.89	1.50	4.69	2.09	0.65	1.32
	5/8 × 7/8							2.13					
	7/8 × 7/8						2.13	2.13					
	7/8 × 1 1/8					3.94[1]		2.40					
	7/8 × 1 3/8							2.80					
	1 1/8 × 7/8						2.40	2.13					1.23[1]
	1 1/8 × 1 1/8							2.40					
	1 1/8 × 1 3/8							2.80					
TRE 40	7/8 × 7/8	11.76	1.65	0.51	0.43	5.71	2.26	2.26	1.61	4.37	2.36	0.80	1.74
	7/8 × 1 1/8							2.54					
	7/8 × 1 3/8							2.93					
	1 1/8 × 1 1/8					5.04	2.54	2.54					2.05[1]
	1 1/8 × 1 3/8							2.93					
	1 1/8 × 1 5/8							3.25					
TRE 80	1 1/8 × 1 1/8	11.76	1.85	0.67	0.51	6.50	2.64	2.64	1.73	5.83	2.83	0.80	2.95
	1 1/8 × 1 3/8							3.03					
	1 1/8 × 1 5/8					5.83		3.35					2.87[1]
	1 3/8 × 1 3/8						3.03	3.03					
	1 3/8 × 1 5/8							3.35					

1) Fixed setting

© Danfoss Inc. 01-07 (USCO)

Dimensions and weight

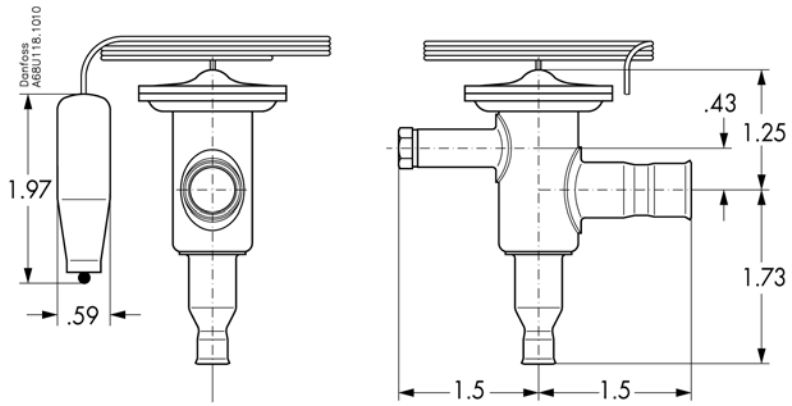

Connection dimensions, see ordering table.
Fig. 6. TUH, Angleway

Weight
.28 lbs.

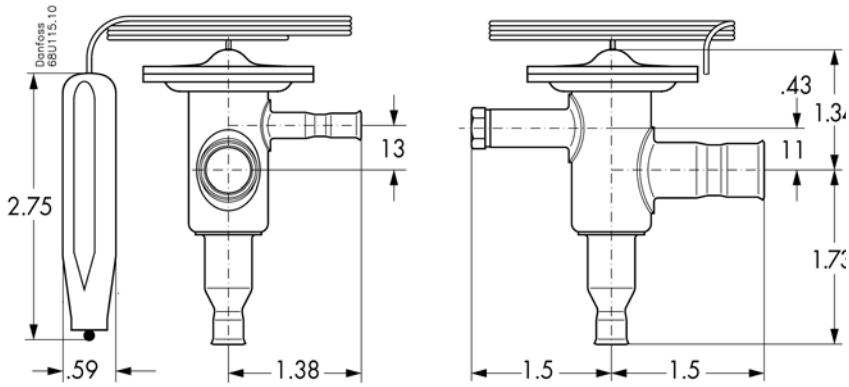

Connection dimensions, see ordering table.
Fig. 6. TCHE, Angleway

Weight
.33 lbs.

Introduction

TR 6 thermostatic expansion valves have been designed and developed with features especially for use in applications such as:

- Residential air conditioning systems
- Split systems
- Roof top units
- Heat pumps
- Light commercial air conditioning systems
- Chillers

The hermetic tight design meets environmental demands for today and the future. The TR 6 pro-gram is available for R22 and R410A. The TR 6 can be used for all fluorinated refrigerants. Models for other refrigerants can be produced to order.

The TR design incorporates a hot-pressed brass body with the entire power element, including the capillary tube and bulb, fabricated from stainless steel. The valves are supplied as standard in straightway versions with fixed orifice and with external equalization. They can be delivered with or without internal check valve and with external superheat adjustment spindle for field retrofit. All valves are designed with balanced port which reduces the influence from varying condensing pressures.

The valves can be delivered with special connections and fittings both at the inlet and outlet and at the equalizer connection. The TR 6 can be delivered with a fixed setting in accordance with the customers' requirement for optimized unit performance.

Features

Compact size - hermetic design.

Developed and designed for R22 and R410A.

Rated capacities ranging up to:
- R22: 6 TR
- R410A: 7 TR

A complete program with or without internal check valve.

An internal check valve with low pressure drop at full flow.

Non-adjustable TR 6 with customer specific factory setting.

Laser-welded power element:
- longer diaphragm life.
- high pressure tolerance and working pressure.

Stainless steel power element, capillary tube and bulb:
- high corrosion resistance
- high strength and vibration resistance
- fast installation and good thermal contact and transmission

Bleed function.

With internal check valve for heat pump systems.

With and without check valve.

Customer specific engravement.
- UL Listed, file SA7200.

© Danfoss Inc. 01-07 (USCO)

Design and function

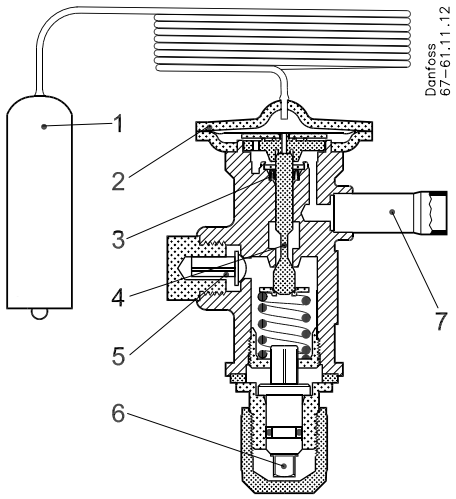

TR 6 with adjustable setting

1. Bulb
2. Thermostatic element
3. Push pin seal
4. Balanced port
5. Check valve
6. Setting spindle for adjustment of static superheat (SS)
7. Equalizer
8. Inlet connection
9. Outlet connection

The central push pin is sealed with a robust seal (pos. 3) that ensures maximum tightness and minimum friction through the lifetime of the valve.

The balanced port (pos. 4) ensures minimal superheat changes when condensing pressure varies. This feature makes the valve ideal for bi-flow operation.

Static superheat (SS) can be adjusted with the setting spindle (see fig. 3, pos. 6) . The standard superheat setting is 3.6°F .

Terminology

SS = Static superheat
OS = Opening superheat
OSH = SS + OS = Operating superheat

Example

Static superheat
SS = 3.6°F (factory setting)
or according to customer specification.

Opening superheat

OS = 7.2°F

The opening superheat is 7.2°F, i.e. from the point the valve begins to open up to nominal capacity. Opening superheat (OS) is a fixed value and cannot be changed.

Operating superheat

OSH = SS + OS
OSH = 3.6°F + 7.2°F = 10.8°F (6°K)

OSH is the total superheat that can be measured on the system.

Ordering

R22 and R410A

Adjustable setting

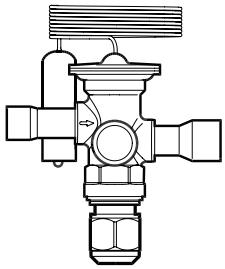

Refrigerant	System Capacity (TR)	Danfoss Code #	Connections included in Kit		
			3/8 X 3/8 ODF	Chatleff	Aeroquip
R-410A	3	067L5955	X	X	X
	4	067L5956	X	X	X
	5	067L5957	X	X	X
R-22	1, 1.5, 2	067L5856	X	X	X
	2.5, 3	067L5857	X	X	X
	3.5, 4	067L5858	X	X	X
	5, 6	067L5859	X	X	X

Adjustable superheat
Equalization line: 24” with flare nut
Capillary tube: 31.5”
Connections 3/8” × 3/8” ODF, Aeroquip and Chatleff adapters supplied

Correction factor for subcooling t_{sub}

Correction factor	t_{sub}							
	4°K	10°K	15°K	20°K	25°K	30°K	35°K	40°K
	7.2°F	18°F	27°F	36°F	45°F	55°F	63°F	72°F
R22	1.00	1.06	1.11	1.15	1.20	1.25	1.30	1.35
R410A	1.00	1.08	1.15	1.21	1.27	1.33	1.39	1.45

© Danfoss Inc. 01-07 (USCO)

Introduction

Thermostatic expansion valves regulate the injection of refrigerant liquid into evaporators.

Injection is controlled by the refrigerant superheat.

Therefore the valves are especially suitable for liquid injection in "dry" evaporators where the superheat at the evaporator outlet is proportional to the evaporator load.

Features

Large temperature range:
- 76°F to +50°F
- Equally applicable to freezing, refrigeration and air conditioning plant.

Interchangeable orifice assembly
- easier stocking
- easy capacity matching
- better service.

Stainless steel power element, capillary tube and bulb
- high corrosion resistance
- high strength and vibration resistance
- fast installation: self-aligning bulb
- good thermal contact and transmission

Rated capacities from 5.5 to 100 TR for R22

Can be supplied with MOP (Max. Operating Pressure)
Protects the compressor motor against excessive evaporating pressure.

Patented double contact bulb
- Fast and easy to install.
- Good temperature transfer from pipe to bulb.

Technical data

Max. temperature
Bulb, when valve is installed: 212°F
Complete valve not installed: 140°F

Min. temperature: –76°F

Max. test pressure: 406 psig

Permissible working pressure: 319 psig

MOP-points

Refrigerant	Range N –40 → +50°F	Range NM –40 → +23°F	Range NL –40 → +5°F	Range B –76 → –13°F
	MOP-point in evaporating temperature t_e and evaporating pressure p_e			
	+60°F	+32°F	+15°F	–4°F
R22	101 psig	57.5 psig	37.8 psig	20.9 psig
R134a	57.4 psig	27.8 psig	15.0 psig	
R404A/R507	124 psig	72.4 psig	49.1 psig	29.0 psig
R407C	94.3 psig			

MOP = Max. Operating Pressure

Ordering

R22

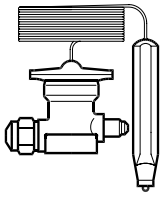

Thermostatic element								
Valve type	Pressure equalization	Capillary tube	Code no.					
			Range N –40 to +50°F		Range NM –40 to +25°F	Range NL –40 to +5°F	Range B –76 to –13°F	
	1/4 in. / 6 mm	feet	Without MOP	MOP+60°F	MOP 32°F	MOP 14°F	Without MOP	MOP –4°F
TEX 5	Ext. 1)	9.8	**067B3250**	**067B3267**	**067B3249**	**067B3253**	**067B3263**	**067B3251**
TEX 12	Ext. 2)	9.8	**067B3210**	**067B3227**	**067B3207**	**067B3213**		**067B3211**
TEX 12	Ext. 2)	16.4	**067B3209**					**067B3212**
TEX 20	Ext. 2)	9.8	**067B3274**	**067B3286**	**067B3273**	**067B3275**		**067B3276**
TEX 20	Ext. 2)	16.4	**067B3290**					**067B3287**
TEX 55	Ext. 2)	9.8	**067G3205**	**067G3220**	**067G3206**			**067G3207**
TEX 55	Ext. 2)	16.4	**067G3209**					**067G3217**

1) Pressure equalization with solder connector can be supplied on contacting Danfoss.
2) Available as accessory: solder adapter for TE 12, TE 20 and TE 55. **Code no. 068B0170.**

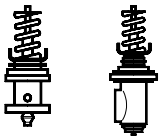

Orifice assembly				
Valve type	Rated capacity Range N: –40 to 50°F TR	Rated capacity Range B: –40 to –13°F TR	Orifice no.	**Code no.**
TEX 5-3	5.6	3.4	01	**067B2089**
TEX 5-4.5	7.6	4.8	02	**067B2090**
TEX 5-7.5	11.1	7.1	03	**067B2091**
TEX 5-12	15.8	10.1	04	**067B2092**
TEX 12-4.5	7.6	4.9	01	**067B2005**
TEX 12-7.5	12.4	8.1	02	**067B2006**
TEX 12-12	18.3	11.8	03	**067B2007**
TEX 12-18	24.1	16.0	04	**067B2008**
TEX 20-30	30.9	20.0	01	**067B2172**
TEX 55-50	68.3	42.3	01	**067G2005**
TEX 55-85	101.7	65.1	02	**067G2006**

The rated capacity is based on:

Evaporating temperature	t_e = +40°F for range N and t_e = –22°F for range B
Condensing temperature	t_c = +90°F
Refrigerant temperature ahead of valve	t_l = +80°F

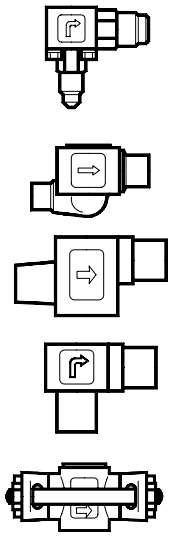

Valve body						
Type	Orifice no.	Connection Inlet × Outlet	Code no.			
		in.	Flare angleway	Solder angleway	Solder straightway	Solder flanges
TE 5	01 - 03 03 04	1/2 × 5/8 1/2 × 7/8 5/8 × 7/8	**067B4013**	**067B4009** **067B4010** **067B4011**	**067B4007** **067B4008**	
TE 12	01 - 02 03 - 04 03 - 04	5/8 × 7/8 7/8 × 1 7/8 × 1 1/8		**067B4022 1)** **067B4023 2)**	**067B4020 1)** **067B4021 2)**	**067B4025 1)** **067B4026 1)**
TE 20	01	7/8 × 1 1/8		**067B4023 2)**	**067B4021 2)**	
TE 55	01- 02	1 1/8 × 1 3/8		**067G4004 3)**	**067G4003 3)**	

1) ODF × ODF
2) ODF × ODM
3) ODM × ODM
ODF = Internal diameter
ODM = External diameter

© Danfoss Inc. 01-07 (USCO)

Ordering
(continued)

R407C

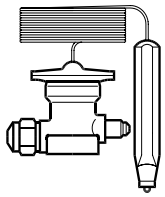

Thermostatic element				
Valve type	Pressure equalization	Capillary tube	Code no.	
			Range N –40 to +50°F	
	1/4 in. / 6 mm	feet	Without MOP	MOP+60°F
TEZ 5	Ext. 1)	9.8	**067B3278**	**067B3277**
TEZ 12	Ext. 2)	9.8	**067B3366**	**067B3367**
TEZ 20	Ext. 2)	9.8	**067B3371**	**067B3372**
TEZ 55	Ext. 2)	9.8	**067G3240**	**067G3241**

1) Pressure equalization with solder connector can be supplied on contacting Danfoss.

2) Available as accessory: solder adapter for TE 12, TE 20 and TE 55. **Code no. 068B0170.**

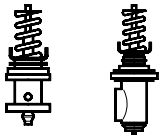

Orifice assembly			
Valve type	Rated capacity Range N: –40 to 50°F TR	Orifice no.	**Code no.**
TEZ 5-3.2	6.1	01	**067B2089**
TEZ 5-5.0	8.3	02	**067B2090**
TEZ 5-8.0	12.0	03	**067B2091**
TEZ 5-13	17.1	04	**067B2092**
TEZ 12-5.0	8.3	01	**067B2005**
TEZ 12-8.0	13.4	02	**067B2006**
TEZ 12-13	19.7	03	**067B2007**
TEZ 12-19.5	26.1	04	**067B2008**
TEZ 20-32.5	33.1	01	**067B2172**
TEZ 55-54	74.0	01	**067G2005**
TEZ 55-92	110.0	02	**067G2006**

The rated capacity is based on:

Evaporating temperature	t_e = +40°F for range N and t_e = –22°F for range B
Condensing temperature	t_c = +90°F
Refrigerant temperature ahead of valve	t_l = +80°F

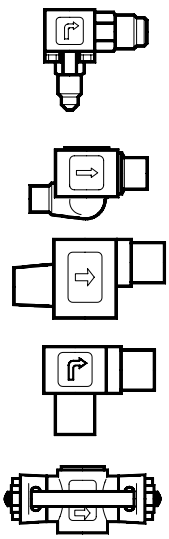

Valve body						
Type	Orifice no.	Connection Inlet × Outlet	Code no.			
		in.	Flare angleway	Solder angleway	Solder straightway	Solder flanges
TE 5	01 - 03 03 04	1/2 × 5/8 1/2 × 7/8 5/8 × 7/8	**067B4013**	**067B4009** **067B4010** **067B4011**	**067B4007** **067B4008**	
TE 12	01 - 02 03 - 04 03 - 04	5/8 × 7/8 7/8 × 1 7/8 × 1 1/8		**067B4022 1)** **067B4023 2)**	**067B4020 1)** **067B4021 2)**	**067B4025 1)** **067B4026 1)**
TE 20	01	7/8 × 1 1/8		**067B4023 2)**	**067B4021 2)**	
TE 55	01- 02 01- 02	1 1/8 × 1 3/8		**067G4004 3)** **067G4002 3)**	**067G4003 3)** **067G4001 3)**	

1) ODF × ODF
2) ODF × ODM
3) ODM × ODM
ODF = Internal diameter
ODM = External diameter

Ordering
(continued)

R134a

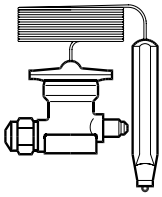

Thermostatic element					
Valve type	Pressure equalization	Capillary tube	Code no.		
			Range N –40 to +50°F		Range NM –40 to 25°F
	1/4 in. / 6 mm	feet	Without MOP	MOP +60°F	MOP 32°F
TEN 5	Ext. [1])	9.84	**067B3297**	**067B3298**	**067B3360**
TEN 12	Ext. [2])	9.84	**067B3232**	**067B3233**	
TEN 12	Ext. [2])	16.4	**067B3363**		
TEN 20	Ext. [2])	9.84	**067B3292**	**067B3293**	
TEN 20	Ext. [2])	9.84	**067B3370**		
TEN 55	Ext. [2])	9.84	**067G3222**	**067G3223**	
TEN 55	Ext. [2])	9.84	**067G3230**		

[1]) Pressure equalization with solder connector can be supplied on contacting Danfoss.
[2]) Available as accessory: solder adapter for TE 12, TE 20 and TE 55. **Code no. 068B0170.**

Orifice assembly

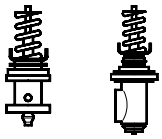

Orifice assembly			
Valve type	Rated capacity TR	Orifice no.	**Code no.**
TEN 5-3.7	3.7	01	**067B2089**
TEN 5-5.4	5.5	02	**067B2090**
TEN 5-8.3	8.3	03	**067B2091**
TEN 5-11.2	11.3	04	**067B2092**
TEN 12-4.7	4.8	01	**067B2005**
TEN 12-7.7	7.8	02	**067B2006**
TEN 12-11.4	11.4	03	**067B2007**
TEN 12-15	15.1	04	**067B2008**
TEN 20-18	18.6	01	**067B2170**
TEN 55-41	41.4	01	**067G2001**
TEN 55-62	62.9	02	**067G2002**

The rated capacity is based on:

Evaporating temperature	t_e = +40°F for range N and t_e = –22°F for range B
Condensing temperature	t_c = +90°F
Refrigerant temperature ahead of valve	t_l = +80°F

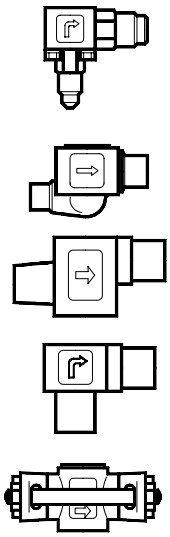

Valve body						
Type	Orifice no.	Connection Inlet × Outlet	Code no.			
		in.	Flare angleway	Solder angleway	Solder straightway	Solder flanges
TE 5	01 - 03 03 04	1/2 × 5/8 1/2 × 7/8 5/8 × 7/8	**067B4013**	**067B4009** **067B4010** **067B4011**	**067B4007** **067B4008**	
TE 12	01 - 02 03 - 04 03 - 04	5/8 × 7/8 7/8 × 1 7/8 × 1 1/8		**067B4022** [1]) **067B4023** [2])	**067B4020** [1]) **067B4021** [2])	**067B4025** [1]) **067B4026** [1])
TE 20	01 01	7/8 × 1 1/8		**067B4023** [2]) **067B4017** [2])	**067B4021** [2]) **067B4016** [2])	
TE 55	01- 02 01- 02	1 1/8 × 1 3/8		**067G4004** [3]) **067G4002** [3])	**067G4003** [3]) **067G4001** [3])	

[1]) ODF × ODF
[2]) ODF × ODM
[3]) ODM × ODM
ODF = Internal diameter
ODM = External diameter

© Danfoss Inc. 01-07 (USCO)

Ordering
(continued)

R404A/R507

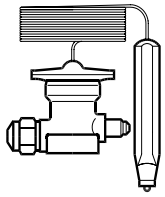

Thermostatic element								
Valve type	Pressure equalization	Capillary tube	Code no.					
			Range N –40 to +50°F		Range NM –40 to 25°F	Range NL –40 to 5°F	Range B –76 to –13°F	
	1/4 in. / 6 mm	feet	Without MOP	MOP +60°F	MOP 32°F	MOP 14°F	Without MOP	MOP –4°F
TES 5	Ext. 1)	9.8	**067B3342**		**067B3357**	**067B3358**	**067B3344**	**067B3343**
TES 12	Ext. 2)	9.8	**067B3347**		**067B3345**	**067B3348**		**067B3349**
TES 12	Ext. 2)	16.4	**067B3346**					**067B3350**
TES 20	Ext. 2)	9.8	**067B3352**		**067B3351**	**067B3353**		**067B3354**
TES 20	Ext. 2)	16.4	**067B3356**					**067B3355**
TES 55	Ext. 2)	9.8	**067G3302**		**067G3303**	**067G3304**		**067G3305**
TES 55	Ext. 2)	16.4	**067G3301**					**067G3306**

1) Pressure equalization with solder connector can be supplied on contacting Danfoss.
2) Available as accessory: solder adapter for TE 12, TE 20 and TE 55. **Code no. 068B0170.**

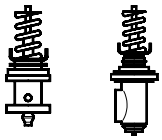

Orifice assembly				
Valve type	Rated capacity range N: –40 to 50°F TR	Rated capacity range B: –76 to –13°F TR	Orifice no.	Code no.
TES 5-3.7	3.7	2.3	01	**067B2089**
TES 5-5.0	5.1	3.2	02	**067B2090**
TES 5-7.2	7.2	4.7	03	**067B2091**
TES 5-10.3	10.3	6.8	04	**067B2092**
TES12-4.2	4.2	3.3	01	**067B2005**
TES 12-6.8	6.8	5.4	02	**067B2006**
TES 12-10.0	10.1	7.9	03	**067B2007**
TES 12-13.4	13.5	10.7	04	**067B2008**
TES 20-16.5	16.9	11.7	01	**067B2175**
TES 55-37.0	37.1	27.1	01	**067G2011**
TES 55-56.0	56.3	41.1	02	**067G2012**

The rated capacity is based on:

Evaporating temperature	t_e = +40°F for range N and t_e = –22°F for range B
Condensing temperature	t_c = +90°F
Refrigerant temperature ahead of valve	t_l = +80°F

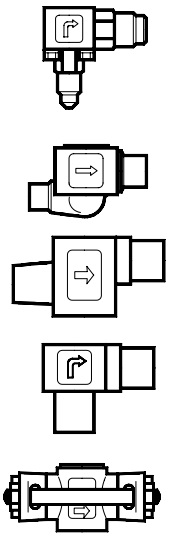

Valve body						
Type	Orifice no.	Connection Inlet × Outlet	Code no.			
		in.	Flare angleway	Solder angleway	Solder straightway	Solder flanges
TE 5	01 - 03 03 04	1/2 × 5/8 1/2 × 7/8 5/8 × 7/8	**067B4013**	**067B4009** **067B4010** **067B4011**	**067B4007** **067B4008**	
TE 5	01- 03 03 04					
TE 12	01 - 02 03 - 04 03 - 04	5/8 × 7/8 7/8 × 1 7/8 × 1 1/8		**067B4022** 1) **067B4023** 2)	**067B4020** 1) **067B4021** 2)	**067B4025** 1) **067B4026** 1)
TE 12	01 - 02 03 - 04 03 - 04					
TE 20	01	7/8 × 1 1/8		**067B4023** 2)	**067B4021** 2)	
TE 55	01- 02	1 1/8 × 1 3/8		**067G4004** 3)	**067G4003** 3)	

1) ODF × ODF
2) ODF × ODM
3) ODM × ODM
ODF = Internal diameter
ODM = External diameter

Identification

The thermostatic element is fitted with a label (on top of the diaphragm).The code refers to the refrigerant for which the valve is designed:

X = R22

N = R134a

S = R404A/R507

Z = R407C

The label gives valve type, evaporating temperature range, MOP point, refrigerant, and max. test pressure, PS.

With TE 20 and TE 55 the rated capacity is stamped on a band label fastened to the valve

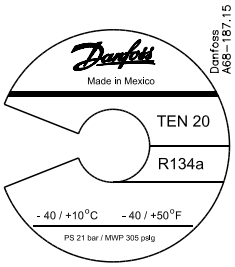

Element label

Orifice assembly for TE 5, TE 12, 20 and 55
The orifice assembly is marked on top of the spring cup, e.g. as shown in the figure. For a given size of valve, the same orifice assembly can be used for valves with ranges N and B.

The thermostatic elements are different however:

- *On TE 5 and TE 12*
  the upper stamp (TE 12) indicates for which valve type the orifice can be used. The lower stamp (01) is the orifice size.
- *On TE 20 and TE 55*
  the upper stamp (N/B 50/35 TR) indicates the rated capacity in the two evaporating temperature ranges N and B, and the refrigerant.
  (50/35 TR= 175 kW in range N and 123 kW in range B).
  The lower stamp (TEX 55) refers to the valve type for which the assembly can be used.

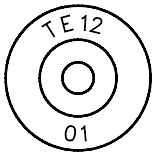

Orifice assembly marking for TE 5 and TE 12

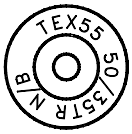

Orifice assembly marking for TE 20 and TE 55

Capillary tube label for TE 5 to TE 55
The label gives the orifice size (04). A new label always accompanies a new orifice assembly.

Capillary tube label TE 5 → TE 55

© Danfoss Inc. 01-07 (USCO)

Dimensions and weights

TE 5

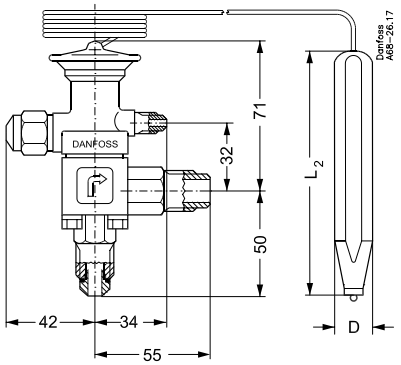

TE 5 - Flare, angleway
Weight: 2.4 lb

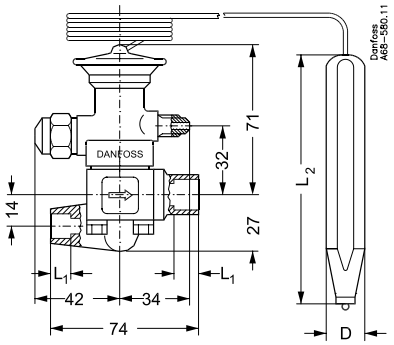

TE 5 - Solder, straightway
Weight: 2.2 lb

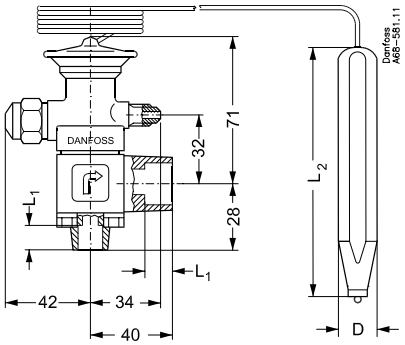

TE 5 - Solder, angleway
Weight: 2.2 lb

TE 5	
Inlet side ∅D_1	L_1 in.
1/2 in. / 12 mm ODF	0.4
5/8 in. / 16 mm ODF	0.4

Outlet side ∅D_2	L_1 in.
5/8 in. / 16 mm ODF	0.5
7/8 in. / 22 mm ODF	0.7

TE 5		
	L_2	D
Range N	4.5	∅0.6
Range B	4.4	∅0.8

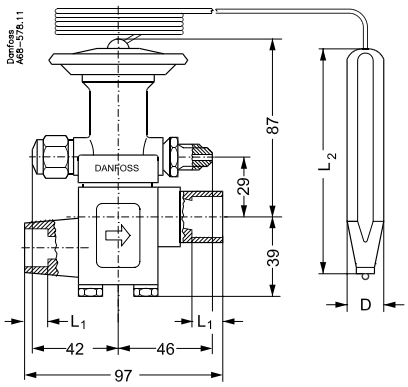

TE 12 and 20 - Solder, straightway
Weight: TE 12: 3.3 lb
TE 20: 3.7 lb

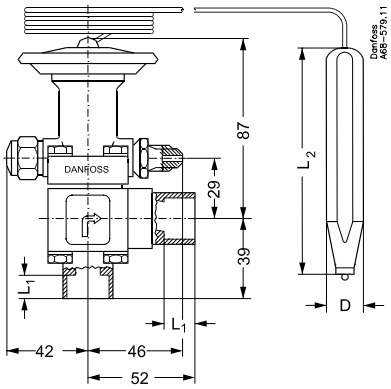

TE 12 and 20 - Solder, angleway
Weight: TE 12: 3.3 lb
TE 20: 3.5 lb

Dimensions and weights
(continued)

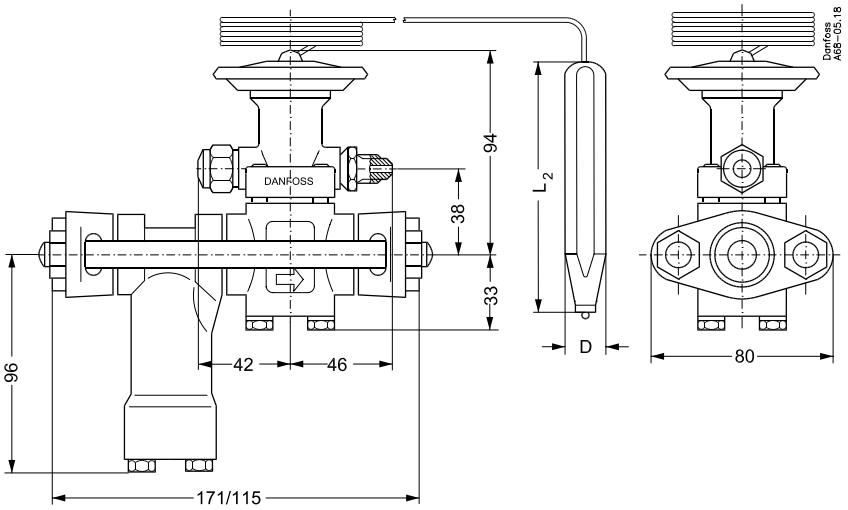

TE 12 - Solder flanges, straightway
Weight: Without filter: 5.1 lb
With filter: 7.0 lb

TE 12 and TE 20	
Inlet side ∅D_1	L_1 in.
$^5/_8$ in. / 16 mm ODF	0.5
$^7/_8$ in. / 22 mm ODF	0.7

Outlet side ∅D_2	L_1 in.
$^7/_8$ in. / 22 mm ODF	0.7
$1^1/_8$ in. / 28 mm ODM	1.0

Bulb - TE 12		
	L_2	D
Range N	4.4	∅0.8
Range B	5.8	∅0.8

Bulb - TE 20		
	L_2	D
Range N/B	5.8	∅0.8

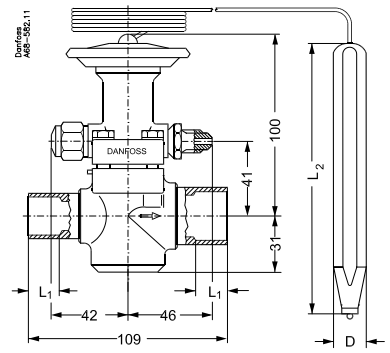

TE 55 - Solder, straightway
Weight: 3.7 lb

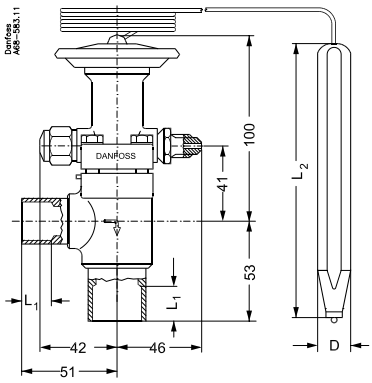

TE 55 - Solder, straightway
Weight: 3.5 lb

Type TE 55	
Inlet side ∅D_1	L_1 in.
$^7/_8$ in. / 22 mm ODF	0.7
$1^1/_8$ in. / 28 mm ODM	1.0

Outlet side ∅D_2	L_1 in.
$1^1/_8$ in. / 28 mm ODF	0.9
$1^3/_8$ in. / 35 mm ODM	1.1

Bulb - TE 55		
	L_2	D
Range N/B	5.8	∅0.8

© Danfoss Inc. 01-07 (USCO)

Introduction

Type EVR 2 to 40

EVR is a direct or servo-operated solenoid valve for liquid, suction, and hot gas lines with fluorinated refrigerants.

EVR valves are supplied complete or as separate components, i.e. valve body, coil and flanges, if required, can be ordered separately.

Features

Complete range of solenoid valves for refrigeration, freezing, and air conditioning plants.

Supplied both normally closed (NC) and normally open (NO) with de-energized coil.

Wide choice of coils for a.c. and d.c.

Suitable for all fluorinated refrigerants.

Designed for media temperatures up to 221°F.

MOPD up to 363 psi with 12 W coil.

Flare connections up to $^{5}/_{8}$ in.

Solder connections up to 2 $^{1}/_{8}$ in.

Extended ends for soldering make installation easy.

It is not necessary to dismantle the valve when soldering in.

EVR are also available with flange connections.

Refrigerants:
- CFC, HCFC, HFC

Temperature of medium:
- –40 to +221°F with 10 W or 12 W coil.
- Max. 266°F during defrosting.

Approvals

DnV, Det norske Veritas, Norge.

Pressure Equipment Directive (PED) 97/23/EC.

The Low Voltage Directive (LVD) 73/23/EC with amendments EN 60730-2-8.

P Polski Rejestr Statków, Polen.

MRS, Maritime Register of Shipping, Russia.

Versions with UL and CSA approval can be supplied to order.

Ordering

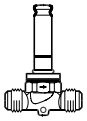

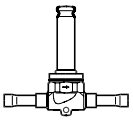

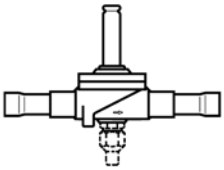

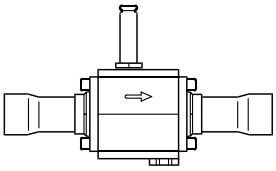

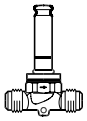

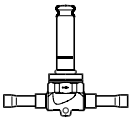

Separate valve bodies, normally closed (NC)

Type	Rated capacity R22 (liquid) tons	Connection in.	Port Size in.	Cv value gal/min	Code no. Valve body without coil type			
					Flare		Solder ODF	
					With manual stem operation in.	Without manual stem operation in.	With manual stem operation in.	Without manual stem operation in.
EVR 2	1.17	1/4	3/32	0.19		**32F7101**		**32F7100**
EVR 3	2.03	1/4	1/8	0.32		**32F1155**		**32F7105**
EVR 3	2.03	3/8	1/8	0.32		**32F1154**		**32F1157**
EVR 4	4.15	3/8	5/32	0.66		**32F7112**		**32F7110**
EVR 4	4.15	1/2	5/32	0.66		**32F7113**		**32F7111**
EVR 6	5.83	3/8	15/64	0.93	**32F1185**	**32F1160**	**32F7116**	**32F7115**
EVR 6	5.83	1/2	15/64	0.93		**32F1159**		**32F1162**
EVR 6	5.83	5/8	15/64	0.93				**32F7117**
EVR 8	8.01	3/8	9/32	1.30				**32F7120**
EVR 8	8.01	1/2	9/32	1.30		**32F7123**		**32F7121**
EVR 8	8.01	5/8	9/32	1.30				**32F7122**
EVR 10	13.8	3/8	3/8	2.20				**32F7125**
EVR 10	13.8	1/2	3/8	2.20	**32F1187**	**32F1165**	**32F1188**	**32F1166**
EVR 10	13.8	5/8	3/8	2.20		**32F1167**		**32F1168**
EVR 15	18.9	5/8	9/16	3.00			**32F1172**	**32F1171**
EVR 15	18.9	7/8	1/4	3.00				**32F7130**
EVR 18	24.6	7/8	19/32	3.90			**32F1004**	**32F7135**
EVR 18	24.6	1 1/8	19/32	3.90				**32F7136**
EVR 20	36.4	7/8	7/8	5.80			**32F1177**	**32F1176**
EVR 20	36.4	1 1/8	7/8	5.80			**32F2272**	**32F1178**
EVR 22	43.7	1 1/8	9/16	6.90				**32F7145**
EVR 22	43.7	1 3/8	9/16	6.90				**32F7146**
EVR 25	72.8	1 1/8	1	12.00			**32F1190**	**32F1189**
EVR 25	72.8	1 3/8	1	12.00			**32F1194**	**32F1193**
EVR 32	116.5	1 3/8	7/8	18.00			**42H1177**	**42H1176**
EVR 32	116.5	1 5/8	7/8	18.00			**42H1179**	**42H1178**
EVR 32	116.5	2 1/8	7/8	18.00			**42H1181**	**42H1180**
EVR 40	182.0	1 5/8	1	29.00			**42H1186**	**42H1185**
EVR 40	182.0	2 1/8	1	29.00			**42H1188**	**42H1187**

Separate valve bodies, normally open (NO)

Type	Rated capacity R22 (liquid) tons	Connection in.	Port size in.	C_v value gal/min	Valve body excl. coil	
					Flare in.	Solder ODF in.
EVR 6	5.8	3/8	1/4	0.93	**032F1163**	**032F1164**
EVR 10	13.8	1/2	3/8	2.20		**032F1169**
EVR 15	18.9	5/8	9/16	3.00		**032F1174**

Metric conversions
1 psi = 0.07 bar
$^5/_9$ (t_1°F - 32) = t_2°C
1 ton = 3.5 kW
1 in. = 25.4 mm
US gal/min = 8.6 m³/h

Coils, see next page

Accessories
Mounting bracket for EVR 2, 3, 4, 6 and 10
Code no. **32F0086**

© Danfoss Inc. 01-07 (USCO)

Introduction

General Purpose Click-on coil, type GP

Sealed to protect against moisture.
Easy click-on mounting system.

Approvals

c UL us Listed with EVR, MH7648

CE Conformity with LVD 73/23/EC with amendments EN 60730-2-8

Ordering

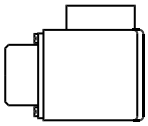

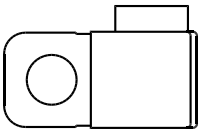

Valve type	Voltage V	Frequency Hz	Code no. Junction box NEMA 2	Code no. Conduit boss NEMA 4	Power consumption
Alternating current a.c.					
EVR EVM EVRA/T EVRS/T AKV/A	24	50/60	**018F7683**	**018F7693**	Holding: 14 W 28 VA Inrusch: 49 V
	110	50/60	**018F7682**	**018F7692**	
	120	60			
	208 - 240	60	**018F7681**	**018F7691**	
	230	50			
Direct current d.c.					
	120		**018F7689**	**018F7699**	20W

Technical data

Design	In accordance with UL 429
Power supply	Alternating current (a.c.) and direct current (d.c.)
Permissible voltage variation	Alternating current (a.c.): +10 to –15% Direct current (d.c.): +10 to –10
Power consumption	Alternating current (a.c.): Inrush: 49VA; Holding: 28VA, 14W Direct current (d.c.): 20W
Insulation of coil wire	Class H accordingto IEC 85
Connection	Junction box or Conduit boss
Enclosure, IEC 529	Junction box NEMA 2 ~ IP 12-32 Conduit boss NEMA 4 ~ IP 54
Ambient temperature	–40 to +140°F (–40 to +50°C)

Cross reference list–GP Coils	
Old Code No.	**New Code No.**
018Z7613	**018F7683**
018Z7612	**018F7682**
018Z7611	**018F7681**
018Z7603	**018F7689**
018Z7623	**018F7693**
018Z7622	**018F7692**
018Z7621	**018F7691**
018Z7625	**018F7699**

Dimensions and weights

EVR (NC) 2 → 15, flare connection

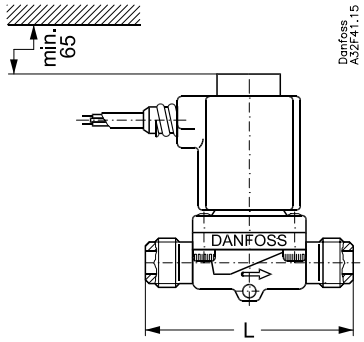

With cable connection coil

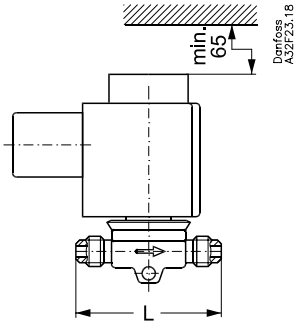

With DIN plugs coil

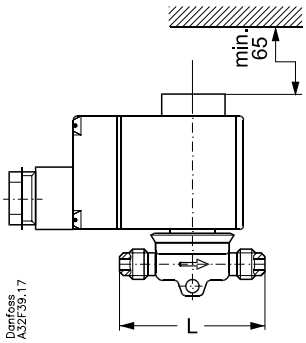

With terminal box coil

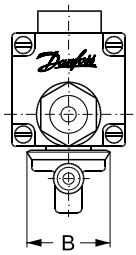

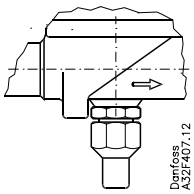

Type	Connection Flare	L	B	Weight with coil
	in.	in.	in.	lbs.
EVR 2	1/4	2.33	1.30	1.10
EVR 3	1/4	2.33	1.30	1.10
	3/8	2.50	1.30	1.10
EVR 6	3/8	2.75	1.50	1.33
	1/2	3.00	1.50	1.33
EVR 10	1/2	3.31	1.80	1.77
	5/8	3.65	1.80	1.77
EVR 15	5/8	4.10	2.25	2.20

© Danfoss Inc. 01-07 (USCO)

Dimensions and weights *(continued)*

EVR (NC) 2 → 22, solder connection

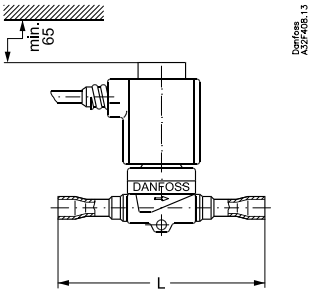

With cable connection coil

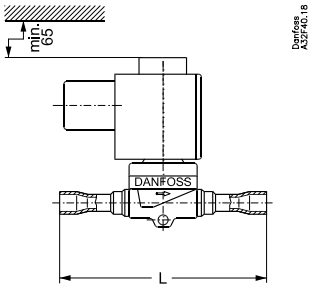

With DIN plugs coil

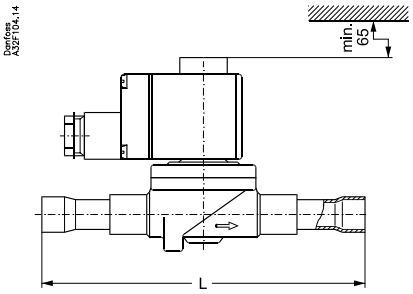

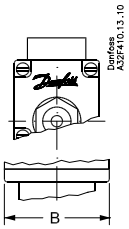

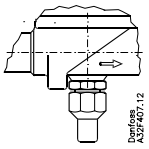

With terminal box coil

Type	Connection Solder	L	B	Weight with coil
	in.	in.	in.	lbs.
EVR 2	1/4	4.00	1.30	1.10
EVR 3	1/4	4.00	1.30	1.30
	3/8	4.60	1.30	1.30
EVR 6	3/8	4.30	1.50	1.30
	1/2	5.00	1.50	1.30
EVR 10	1/2	5.00	1.80	1.60
	5/8	6.30	1.80	1.60
EVR 15	5/8	7.00	2.25	2.20
	7/8	7.00	2.25	2.20
EVR 20	7/8	7.50	2.90	3.30
	1 1/8	8.50	2.90	3.30
EVR 22	1 3/8	11.00	2.90	3.30

Dimensions and weights *(continued)*

EVR (NC) 25, 32 and 40, solder connection

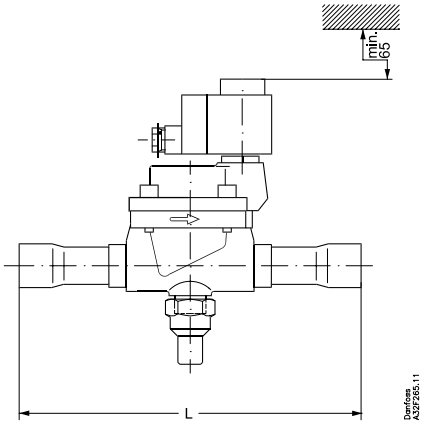

EVR 25 with terminal box coil

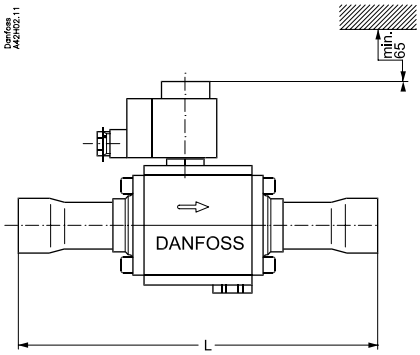

EVR 32 and 40 terminal box

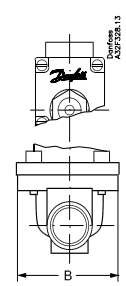

EVR 25

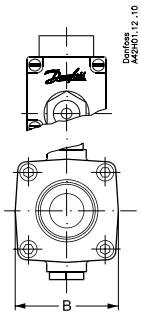

EVR 32 and 40

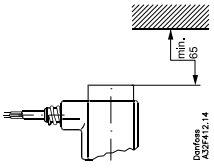

Coil with cable

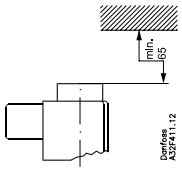

Coil with DIN plugs

Type	Connection Solder	L	B	Weight with coil
	in.	in.	in.	lbs.
EVR 25	$1^1/_8$	10.00	3.75	28.75
	$1^3/_8$	11.00	3.75	29.35
EVR 32	$1^3/_8$	11.00	3.15	32.00
	$1^5/_8$	11.00	3.15	32.25
EVR 40	$1^5/_8$	11.00	3.15	32.25
	$2^1/_8$	11.00	3.15	32.25

© Danfoss Inc. 01-07 (USCO)

Dimensions and weights *(continued)*

EVR (NO) 6 → 22, flare or solder connection

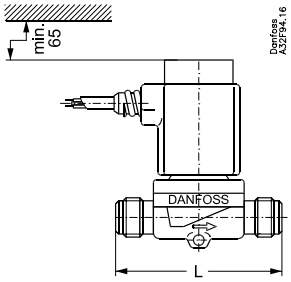

With cable connection coil

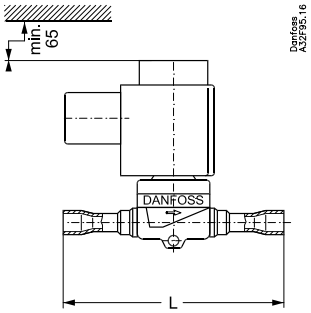

With DIN plugs coil

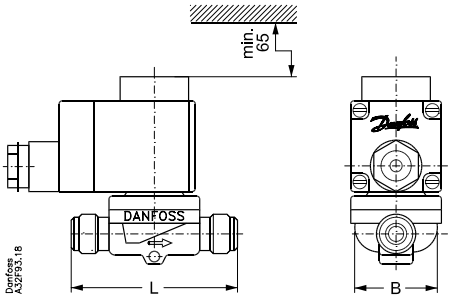

With terminal box coil

Flare			
Type	L	B	Weight with coil
	in.	in.	lbs.
EVR 6	2.72	1.50	1.33
EVR 10	3.31	1.80	1.60
EVR 15	4.10	2.25	2.00

Solder			
Type	L	B	Weight with coil
	in.	in.	lbs.
EVR 6	4.30	1.50	1.33
EVR 10	5.00	1.80	1.60
EVR 15	7.00	2.25	2.00
EVR 20	7.50 [1)]	2.90	3.30
EVR 22	11.00	2.90	3.30

1) Applies to $^{7}/_{8}$ in. connections. For $1^{1}/_{8}$ in. connections, L = 8.43 in.

Introduction

Ranges from 1 $^1/_3$ to 2 $^3/_4$ TR R22, 0 to 80 psig, factory setting = 29 psig

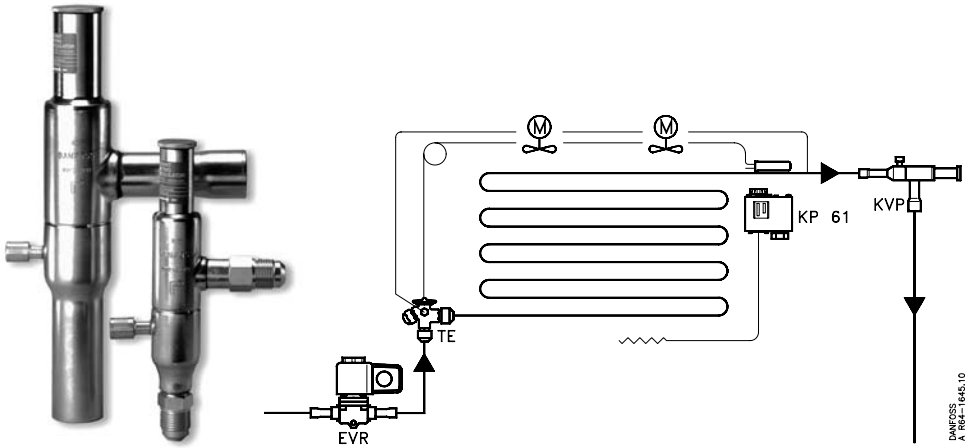

KVP evaporator pressure regulators are mounted in the suction line of refrigeration and air conditioning systems.

They are used to maintain a constant pressure corresponding to a constant temperature on the evaporator.

They also protect against too low an evaporating pressure by throttling down when pressure falls below the set value.

They are also used to differentiate the evaporating pressures in two or more evaporators in systems with one compressor.

Features

Accurate, adjustable pressure regulation

Wide capacity and operating range

Pulsation damping design

Stainless steel bellows

Compact angle design for easy installation in any position

"Hermetic" brazed construction

$^1/_4$ in. Schrader valve for pressure testing

Available with flare and ODF solder connections

For use with CFC, HCFC and HFC refrigerants

C UL US listed, file SA7200

Maximum working pressure
- PS (MWP) = 261 psig

Maximum test pressure
- KVP 12 to 22: p' = 410 psig
- KVP 28 to 35: p' = 370 psig

Maximum temperature of medium: 266°F

Minimum temperature of medium: –40°F

P band (full valve stroke)
- KVP 12 to 22 = 26 psi
- KVP 28 to 35 = 40 psi

Metric conversions
1 psi = 0.07 bar
$^5/_9$ (t_1°F – 32) = t_2°C

© Danfoss Inc. 01-07 (USCO)

Ordering

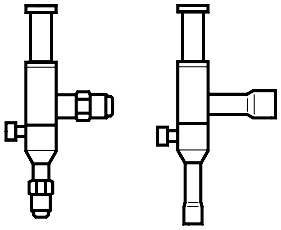

Type	Rated capacity [1] tons				Flare connection	Code no.	Solder connection	Code no.
	R 22	R 134a	R 404A / R 507	R 407C	in.		in. ODF	
KVP 12	1.3	0.9	1.2	1.2	1/2	**034L0021**	1/2	**034L0023**
KVP 15	1.3	0.9	1.2	1.2	5/8	**034L0022**	5/8	**034L0029**
KVP 22	1.3	0.9	1.2	1.2			7/8	**034L0025**
KVP 28	2.8	1.9	2.4	2.6			11/8	**034L0026**
KVP 35	2.8	1.9	2.4	2.6			13/8	**034L0032**

1) Rated capacity is based on:
Evaporating temperature t_e = 40°F
Condensing temperature t_c = 100°F
Pressure drop across regulator Δp = 2 psi
Offset (design evaporating pressure minus minimum allowable evaporator pressure) = 9 psi.

Note: The connection dimensions chosen must not be too small, as gas velocities in excess of 130 ft/s at the inlet of the regulator can result in flow noise.

Dimensions and weights

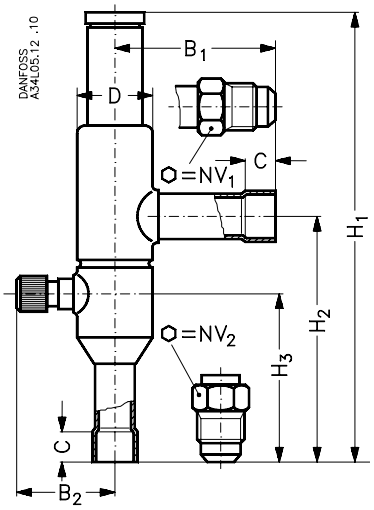

Type	Connection		NV_1	NV_2	H_1	H_2	H_3	B_1	B_2	C	Ø D	Weight
	Flare	Solder ODF										
	in.	in.	in.	in.	in.	in.	in.	in.	in.	in.	in.	lbs
KVP 12	1/2	1/2	0.75	0.75	7.05	3.90	2.60	2.52	1.61	0.39	1.18	0.90
KVP 15	5/8	5/8	0.95	0.95	7.05	3.90	2.60	2.52	1.61	0.47	1.18	0.90
KVP 22		7/8	0.95	0.95	7.05	3.90	2.60	2.52	1.61	0.67	1.18	0.90
KVP 28		1 1/8	0.95	0.95	10.20	5.95	4.13	4.10	1.89	0.79	1.69	2.00
KVP 35		1 3/8			10.20	5.95	4.13	4.10	1.89	0.98	1.69	2.00

Metric conversions
1 in. = 25.4 mm
1 lb = 0.454 kg

Introduction

KVQ is an electronically operated evaporating pressure regulator designed for small refrigerating systems. The KVQ valve is normally controlled by a controller from the Danfoss' range of ADAP-KOOL® Refrigeration control system.

The KVQ valve consists of 2 main components:
- Actuator
- Valve

The valve can be used in small refrigerating systems, e.g. supermarket installations and cold rooms for fruit, vegetables, and meat products.

The valve functions as an evaporating pressure regulator. A pulsating voltage signal is transmitted to the actuator from the controller. The signal is supplied in pulse sequences of up to 10 sec. duration. In this way a force is produced in the actuator's pressure container. This force will act on the charge in the bellows, move the pressure pin, and hence the valve plate.

The evaporating pressure rises when the valve closes. By varying the amount of power applied the controller ensures correct positioning of the valve plate. The evaporating pressure will therefore maintain the value resulting in the correct media temperature. Changes of the suction pressure are of no consequence, as the area of the bellows equals the orifice area. If the supply voltage is cut out, the valve opens.

Features

Accurate pressure control

Capacity: 3 to 7.2 TR (R 22)

All fluorinated refrigerants

Regulating range: 0 to 102 psi

US listed, file SA7200

© Danfoss Inc. 01-07 (USCO)

Technical data

KVQ			
Regulating range	p_e = 0 → 101.5 psi		
Refrigerant temperature in regulating range	Refrigerant	p_e = 0 psig	p_e = 101.5 psi
	R 22	–42°F	59°F
	R 134a	–22°F	95°F
	R 404A	–52.6°F	50°F
	R 407C	–31°F	62.6°F
	R 507	–52.6°F	46.4°F
Refrigerants	CFC, HCFC and HFC		
Ambient temperature	During operation: –45 → +104°F During transport: –50 → +158°F		
Max. working pressure PB	312 psi		
Max. test pressure p'	405 psi		
Power supply	24 V pulsating a.c. from regulator		
Max. consumption	35 VA / 24 V a.c.		
Enclosure	IP 54 acc. to IEC 529		
Cable entry	Pg 13.5		
During forced closing by hot-gas defrosting			
Max. closing pressure	253.8 psi		
Max. hot gas temperature	248˚F		

Ordering

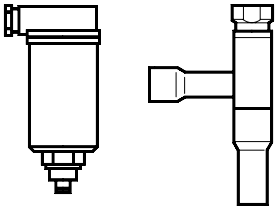

Type	Rated capacity [1] TR				Valve		Actuator
					Connection	**Code no.**	**Code no.**
	R22	R134a	R404A/R507	R407C	in.		
KVQ 15	2.25	1.70	2.0	2.10	$^5/_8$	**034L0117**	**034L0105**
KVQ 22	2.25	1.70	2.0	2.10	$^7/_8$	**034L0114**	
KVQ 28	5.37	4.00	4.8	4.90	$1^1/_8$	**034L0119**	**034L0106**
						034L0115	
KVQ 35	5.37	4.00	4.8	4.90	$1^3/_8$	**034L0120**	

1) Rated capacity is the valve capacity at evaporating temperature t_e = 14˚F, condensing temperature t_c = +77˚F and pressure drop across valve Δp = 3 psi. 1 kW = 0.284 ton (TR).

Dimensions and weights

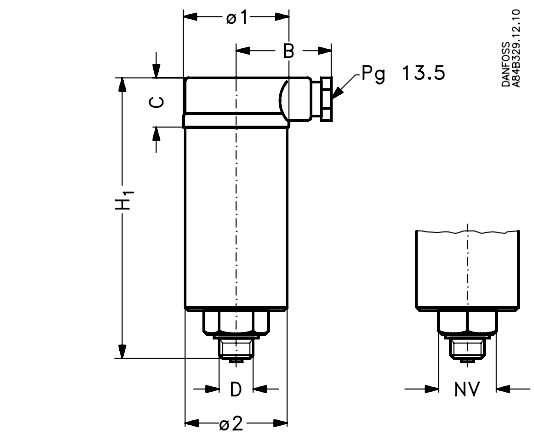

KVQ actuator

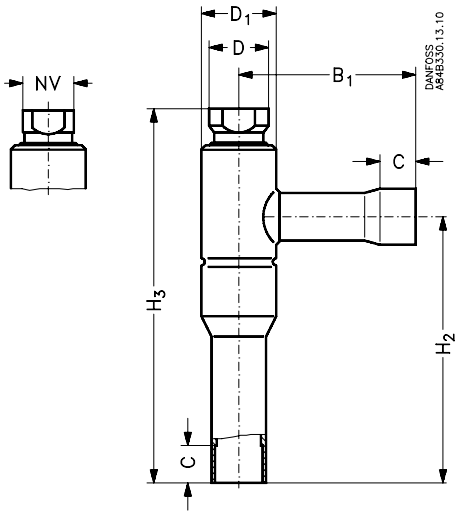

KVQ valve

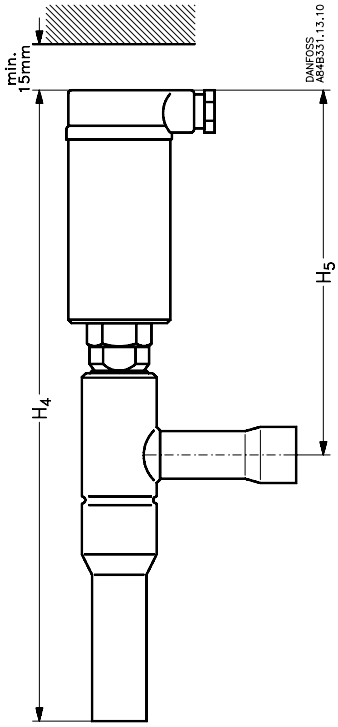

Complete KVQ

KVQ actuator								
Type	H1	B	C	NV	D	Ø 1	Ø 2	Weight
	in.	in.	in.	in.	in.	in.	in.	lbs.
KVQ 15-22	6.40	2.15	1.07	1.26	0.63 × 0.06	2.50	2.37	1.10
KVQ 28-35	6.40	2.15	1.07	1.26	0.71 × 0.06	2.50	2.37	1.10

KVQ valve									
Type	Connect. Solder	H_2	H_3	B_1	C	D_1	D	N_V	Weight
	in.	in.	in.	in.	in.	in.	in.	in.	lbs.
KVQ 15	$^5/_8$	11.93	3.90	6.07	2.52	0.50	1.19	1.11	1.00
KVQ 22	$^7/_8$	11.93	3.90	6.07	2.52	0.67	1.19	1.11	1.00
KVQ 28	$1^1/_8$	14.41	5.95	8.50	4.14	0.87	1.70	1.38	2.00
KVQ 35	$1^3/_8$	14.41	5.95	8.50	4.14	0.99	1.70	1.38	2.00

Complete KVQ		
Type	H_4	H_5
	in.	in.
KVQ 15-22	11.93	8.04
KVQ 28-35	14.41	8.31

© Danfoss Inc. 01-07 (USCO)

Introduction

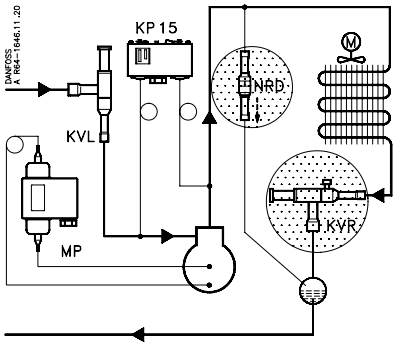

KVR condenser regulators can be mounted in either the gas or liquid side of the condenser in refrigeration and air conditioning systems.

They are used to maintain a constant and sufficiently high condensing pressure with systems using air-cooled condensers.

They can also be used with valve types NRD or KVD to assure that adequate pressure is maintained on the receiver.

Features

Accurate, adjustable pressure regulation

Wide capacity and operating range

Pulsation damping design

Stainless steel bellows

Compact angle design for easy installation in any position

"Hermetic" brazed construction

$^1/_4$ in. Schrader valve for pressure testing

Available with flare and ODF solder connections

For use with CFC, HCFC and HFC refrigerants

Can be used as a relief valve from high pressure to suction side

C(UL) US listed, file SA7200

Regulation range
- 70 to 250 psig
- Factory setting = 145 psig

Maximum working pressure
- KVR: PS (MWP) = 400 psig
- NRD: PS (MWP) = 400 psig

Maximum test pressure
- KVR: p' = 450 psig
- NRD: p' = 530 psig

Maximum temperature of medium
- KVR/NRD with Schrader: 275°F
- KVR without Schrader: 220˚F

Minimum temperature of medium –40°F

P band (full valve stroke)
- KVR 12 to 22: 90 psi
- KVR 28 to 35: 72.5 psi

Opening differential pressure for NRD
- Fully open: Δp = 43 psi

Metric conversions
1 psi = 0.07 bar
$^5/_9$ (t_1°F – 32) = t_2°C

Ordering

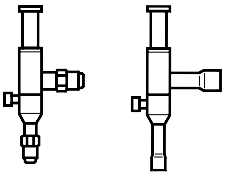

Type	Rated liquid capacity [1] (Evaporator capacity) tons				Rated hot gas [1] (Evaporator capacity) tons				Flare connection	Code no.	Solder Connection	Code no.
	R22	R134a	R404A/R507	R407C	R22	R134a	R404A/R507	R407C	in.		in.	
KVR 12	12.7	11.8	8.2	13.8	4.13	3.03	3.27	4.50	1/2	034L0091	1/2	034L0093
KVR 15									5/8	034L0092	5/8	034L0097
KVR 22											7/8	034L0094
KVR 28	32.6	30.2	20.9	35.5	10.93	8.04	8.66	11.91			1 1/8	034L0095
KVR 35											1 3/8	034L0100

1) Rated capacity is based on:
Evaporating temperature t_e = 40°F
Condensing temperature t_c = 110°F
Pressure drop across valve Δp = 3 psi for liquid capacity
Δp = 6 psi for hot gas capacity

Note: The connection dimensions chosen must not be too small, as gas velocities in excess of 130 ft/s at the inlet of the regulator can result in flow noise.

Dimensions and weights

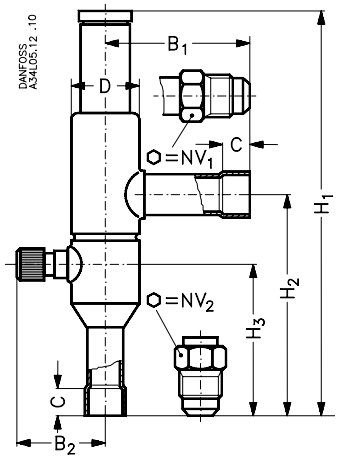

KVR

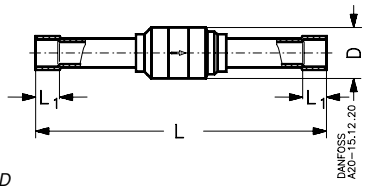

NRD

Type	Connection		NV_1	NV_2	H_1	H_2	H_3	L	L_1	B_1	B_2	C	dia. D	Weight
	Flare	Solder ODF												
	in.	in.			in.	in.	in.	in.	in.	in.	in.	in.	in.	lbs.
KVR 12	1/2	1/2	0.75	0.75	7.05	3.90	2.60			2.52	1.61	0.39	1.18	0.88
KVR 15	5/8	5/8	0.95	0.95	7.05	3.90	2.60			2.52	1.61	0.47	1.18	0.88
KVR 22		7/8			7.05	3.90	2.60			2.52	1.61	0.67	1.18	0.88
KVR 28		1 1/8			10.20	5.95	4.06			4.13	1.89	0.79	1.69	2.20
KVR 35		1 3/8			10.20	5.95	4.06			4.13	1.89	0.98	1.69	2.20
NRD		1/2						5.16	0.39				0.87	0.22

Metric conversions
1 in. = 25.4 mm
1 lb = 0.454 kg

© Danfoss Inc. 01-07 (USCO)

Introduction

TUH/TCHE capacity regulators adapt the compressor capacity to the actual evaporator load for applications operating at an evaporating temperature of around 32°F. TUH/TCHE valves are typically used in applications such as:

- Air- driers
- Water chillers

Placed in a bypass between the high- and low pressure sides of the system. TUH/TCHE maintain the compressor's suction pressure by injecting hot gas/cool gas from the high pressure side.

The TUH has internal pressure equalisation and is opening on a decrease in pressure at the outlet of the valve. The TCHE has external pressure equalisation and is opening directly on a decrease in the suction pressure at the compressor.

For both valves, the bulb only serves as a reservoir for the charge, however, it is recommended to mount it in a position where the temperature variation during running conditions is limited (see ⓐ and ⓑ in the application drawing on page 55).

Features

Bimetal connections
- straightforward and fast soldering (no wet cloth or refrigeration pliers required).

Refrigerants
R134a, R404A/R507, R407C, and other refrigerants by request.

Replacement capacities up to 7.6 kW (2.2 TR) for R404A

Stable regulation

Tight across the seat

Stainless steel, hermetically tight solder version
- high connection strength
- high corrosion resistance
- capillary tube joints of high strength and vibration resistance

Compact design
small dimensions and low weight

Laser-welded, stainless steel diaphragm element
- optimum function
- long diaphragm life
- high pressure resistance

Adjustable setting
- accurate setting
- fine tuning possible

Low p-band

Advanced filter/strainer design

Low hysteresis

Standard range

(Variant versions available upon request)

Versions available in the standard ranges only:

One standard range per refrigerant

Refrigerants:	R134a, R404A/R507, R407C
Capillary tube length:	TUH: 2.6 ft. TCHE: 2.9 ft.
Orifice sizes:	TUH: Orifice 9 TCHE: Orifice 3 Orifice 4
Connections:	
Inlet	3/8 in.
Outlet	1/2 in.

Technical data

Max. valve body temperature	248°F
short-lived peak	302°F
Permissible working pressure	MWP = 500 psig
Max. test pressure	540 psig
P-band	7.3 psig

Setting
The valve is set to start opening at an evaporating temperature of +36°F . The setting can be changed by turning the setting spindle. The temperature at which the valve starts opening will increase by turning the spindle clockwise whereas it will decrease by turning the spindle anticlockwise.

Adjustment range for start opening:

R134a	+10 → +50°F
R404A/R507	+23 → +41°F
R407C	+19 → +45°F

Specifically designed for hot gas applications. Both the TUH and TCHE valves react only on suction pressure variations.

Identification

Main valve data is given on the element (fig. 1) and on the valve body (fig. 2).

Main valve data example, fig. 1

TUH	=	Type
068U2954	=	Code number
R404A	=	Refrigerant
+23 → +41°F	=	Adjusting range in °F
MWP 500 psig	=	Max. working pressure
104B	=	Date marking (week **10**, year 200**4**, weekday **B** = Tuesday)

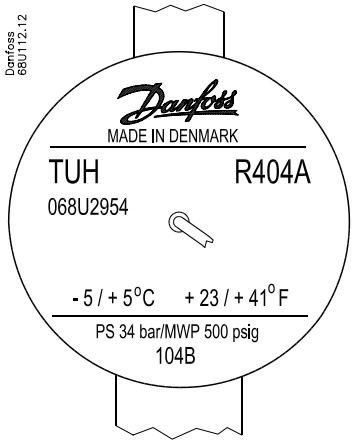

Fig. 1

Main valve data example, fig. 2

⇒	=	Normal flow direction
inch	=	Connection in inches (MM = millimetres)
ORIF 9	=	Orifice number 9
1.3 TR	=	Replacement capacity in Tons of Refrigeration
4.5 kW	=	Replacement capacity in kW

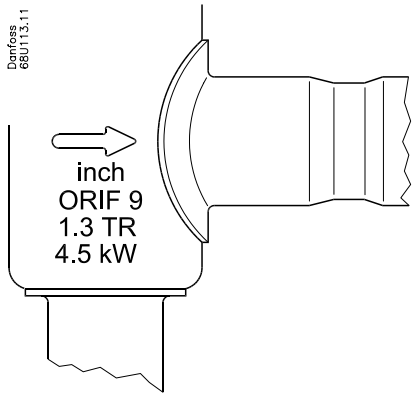

Fig. 2

067L1179

Ordering

Supplied with bulb strap

R134a, R404A/R507, R407C

TU

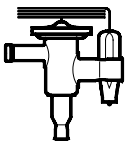

TC

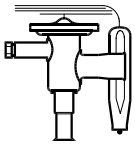

Standard range

Refrigerant	Type	Orifice no.	Pressure equalisation TR		Connection Inlet × Outlet in.[2]	Code no.	Code no.
R134a	TUH	9	0.5	int.	$^3/_8 \times {}^1/_2$	**068U2953**	**068U2950**
	TCHE	3	0.75	ext.	$^3/_8 \times {}^1/_2$	**068U4540**	**068U4530**
	TCHE	4	1	ext.	$^3/_8 \times {}^1/_2$	**068U4537**	**068U4534**
R404A/R507	TUH	9	1.3	int.	$^3/_8 \times {}^1/_2$	**068U2954**	**068U2951**
	TCHE	3	1.7	ext.	$^3/_8 \times {}^1/_2$	**068U4541**	**068U4531**
	TCHE	4	2.2	ext.	$^3/_8 \times {}^1/_2$	**068U4538**	**068U4535**
R407C	TUH	9	0.8	int.	$^3/_8 \times {}^1/_2$	**068U2955**	**068U2952**
	TCHE	3	1.2	ext.	$^3/_8 \times {}^1/_2$	**068U4542**	**068U4532**
	TCHE	4	1.5	ext.	$^3/_8 \times {}^1/_2$	**068U4539**	**068U4536**

1) The nominal replacement capacity is the regulator capacity at evaporating temperature t_e = 28°F, condensing temperature t_c = 104°F, reduction of suction temperature / suction pressure Δt_s = 7°F.
2) Valves with inch connections have $^1/_4$ in. pressure equalization.
3) Valves with mm connections have 6 mm pressure equalization.

© Danfoss Inc. 01-07 (USCO)

Application

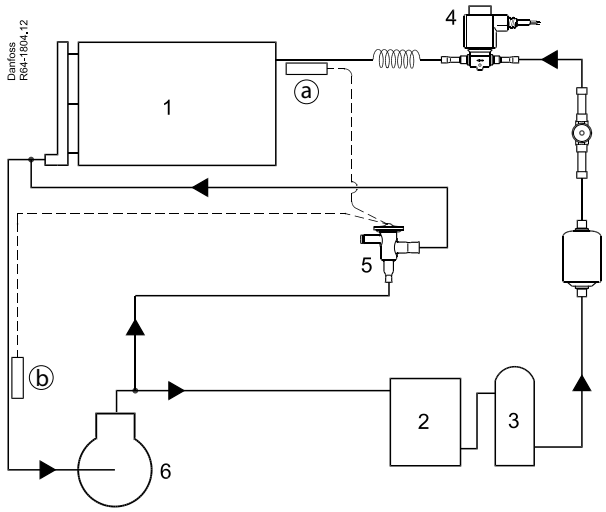

Internally pressure equalized

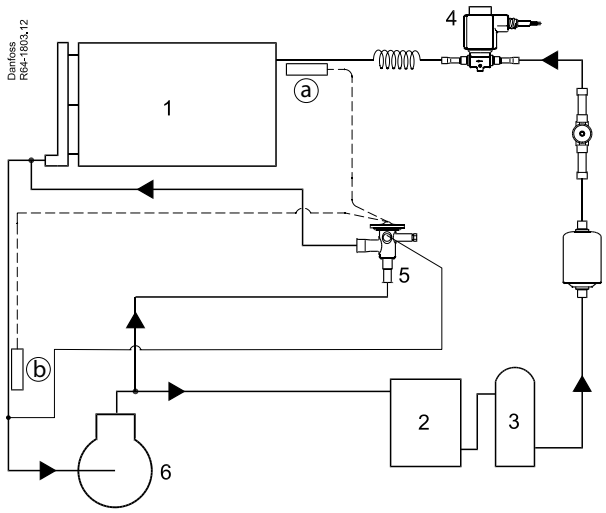

Externally pressure equalized

1. Evaporator
2. Condenser
3. Receiver
4. Solenoid valve
5. Discharge bypass valve with adjustable remote bulb
6. Compressor

Note:
The bulb serves only as a reservoir for the charge, however, it is recommended to mount it in a position where the temperature variation during running conditions is limited (see ⓐ and ⓑ in the application drawings above).

Introduction

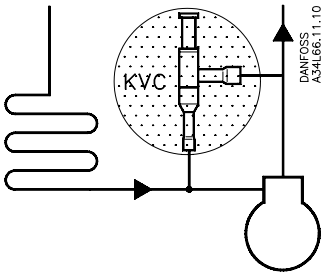

KVC capacity regulators are used to adapt compressor capacity to actual evaporator load by supplying a replacement capacity in form of hot/cool gas.

It is installed in a bypass line between the high and low pressure sides of the refrigeration system and is designed for direct gas injection into the suction line.

Features

Accurate, adjustable pressure regulation

Wide capacity and operating range

Pulsation, damping design

Stainless steel bellows

Compact angle design for easy installation

"Hermetic" brazed construction

Available with flare and ODF solder connections

For CFC, HCFC and HFC refrigerants

C UL US listed, file SA7200

Regulation range
- 3 to 85 psig
- Factory setting = 29 psig

Maximum working pressure:
- PS = 400 psig

Maximum test pressure:
- p' = 450 psig

Maximum temperature of medium: 266°F

Minimum temperature of medium: –40°F

Maximum P-band: 29 psi

Metric conversions
1 psi = 0.07 bar
$^5/_9$ (t_1°F – 32) = t_2°C
1 ton = 3.5 kW

Ordering

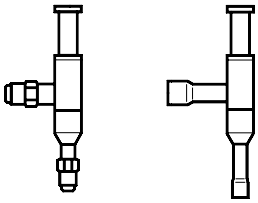

Type	Rated capacity [1] tons				Flare connection	Code no.	Solder connection	Code no.
	R22	R134a	R404A / R507	R407C	in.		in.	
KVC 12	2.14	1.36	2.02	2.31	$^1/_2$	**034L0141**	$^1/_2$	**034L0143**
KVC 15	4.17	2.65	3.93	4.50	$^5/_8$	**034L0142**	$^5/_8$	**034L0147**
KVC 22	5.35	3.41	5.04	5.78			$^7/_8$	**034L0144**

1) Rated capacity is based on:
Suction gas temperature t_s = 10°F
Liquid temperature t_l = 100°F
Offset Δp = 10 psi

Note: The connection dimensions chosen must not be too small, as gas velocities in excess of 130 ft/s at the inlet of the regulator can result in flow noise.

If the temperature in the discharge gas line is too high according to the compressor specifications, it is recommended to install a liquid injection valve in a bypass from the liquid line to the suction line.

© Danfoss Inc. 01-07 (USCO)

Introduction

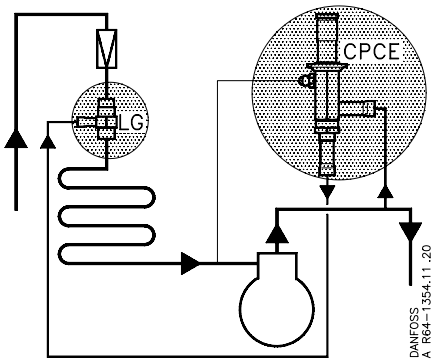

CPCE capacity regulators are used to adapt compressor capacity to actual evaporator load.

They are installed in a bypass line between the high and low pressure sides of the refrigeration system and is designed for hot gas injection into the evaporator just after the expansion valve.

Liquid-gas mixer type LG can be used at the point of injection to assure a proper mixture.

Features

CPCE hot gas capacity valve

Superior control accuracy

Provides protection against too low an evaporator temperature

Direct connection to system suction line

For use with CFC, HCFC and HFC refrigerants

LG liquid gas mixer

LG provides homogenous mixture of liquid and hot gas refrigerant in the evaporator

Can be used for hot gas defrosting or reverse cycle systems

US listed, file SA7200

approved

Refrigerants:
CFC, HCFC, HFC

Regulation range
- p_e = 0 to 85 psig
- Factory setting = 5.8 psig

Maximum working pressure:
- MWP = 310 psig

Maximum test pressure:
- p' = 400 psig

Maximum media temperature: 285°F

Minimum media temperature: –40°F

Metric conversions
1 psi = 0.07 bar
$^5/_9$ (t_1°F – 32) = t_2°C

Ordering

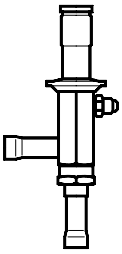

Capacity regulator							
Type	Connection		Rated capacity[1] tons				Code no.
	Flare	Solder - ODF	R22	R134a	R404A/R507	R407C	
	in.	in.					
CPCE 12	1/2		6.2	4.3	6.3	6.7	**034N0081**
CPCE 12		1/2	6.2	4.3	6.3	6.7	**034N0082**
CPCE 15		5/8	9.2	6.3	9.1	9.9	**034N0083**
CPCE 22		7/8	12.2	8.4	12.1	13.2	**034N0084**

1) Rated capacity is based on:
Minimum suction temperature t_s = 15°F
Condensing temperature t_c = 100°F
Superheat of expansion valve Δt_s = 7°F

Liquid - gas mixer				
Type	Connection			Code no.
	For expansion valve ODM	For hot gas ODF	For liquid distributor ODF	
	in.	in.	in.	
LG 12-16	5/8	1/2	5/8	**069G4001**
LG 12-22	7/8	1/2	7/8	**069G4002**
LG 16-28	1 1/8	5/8	1 1/8	**069G4003**
LG 22-35	1 3/8	7/8	1 3/8	**069G4004**

Dimensions and weights

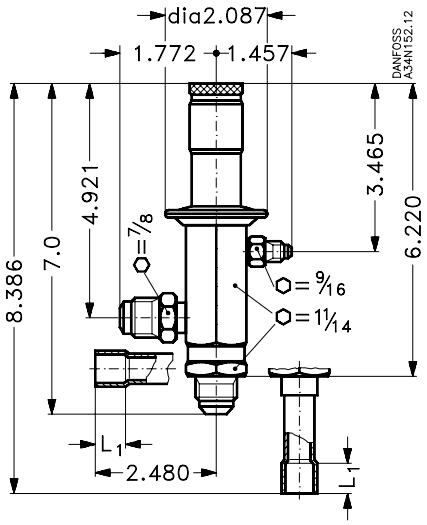

CPCE

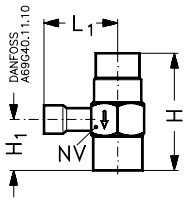

LG

Type	L1 in.	Weight lbs
CPCE 12	0.38	2
CPCE 15	0.50	2
CPCE 22	0.67	2

Type	H in.	H1 in.	L1 in.	NV in.	Weight lbs
LG 12-16	2.13	0.88	1.56	0.94	0.20
LG 12-22	2.44	1.03	1.69	1.13	0.40
LG 16-28	3.13	1.38	1.88	1.44	0.70
LG 22-35	3.50	1.56	2.63	1.63	0.90

Metric conversions
1 in. = 25.4 mm
1 lb = 0.454 kg

© Danfoss Inc. 01-07 (USCO)

Introduction

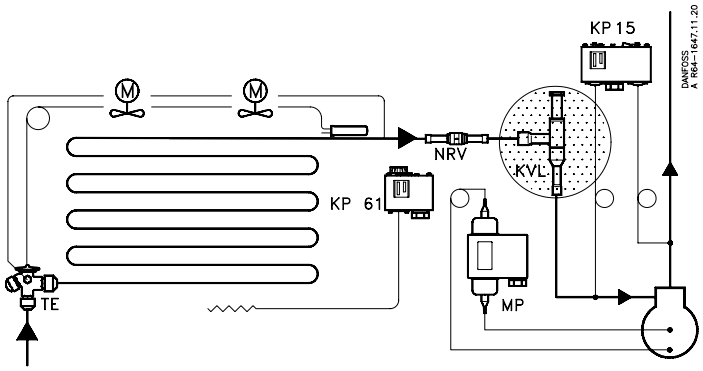

KVL crankcase pressure regulators are used to protect the compressor motor against overload experienced during startup after long off periods or just after defrost periods.

They are installed in the suction line of refrigeration systems.

Features

Accurate, adjustable pressure regulation

Wide capacity and operating range

Pulsation damping design

Stainless steel bellows

Compact angle design for easy installation in any position

"Hermetic" brazed construction

Available with flare and ODF solder connections

For use with CFC, HCFC and HFC refrigerants

C UL US approved, file SA7200

Regulation range
- 3 to 85 psig
- Factory setting = 29 psig

Maximum working pressure
- KVL 12 to 22: PS = 261 psig
- KVL 28 to 35: PS = 261 psig

Maximum test pressure
- KVL 12 to 22: p' = 405 psig
- KVL 28 to 35: p' = 370 psig

Maximum temperature of medium: 266°F

Minimum temperature of medium: –76°F

Maximum P-band
- KVL 12 to 22: 29 psi
- KVL 28 to 35: 22 psi

Metric conversions
1 psi = 0.07 bar
$^5/_9$ (t_1°F – 32) = t_2°C
1 ton = 3.5 kW

Ordering

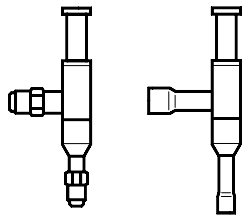

Metric conversions
1 psi = 0.07 bar
$^5/_9$ (t_1°F – 32) = t_2°C
1 ton = 3.5 kW
1 in. = 25.4 mm

Type	Rated capacity [1] TR				Flare connection	Code no.	Solder connection	Code no.
	R22	R134a	R404A / R507	R407C	in.		in.	
KVL 12	0.34	0.22	0.28	0.31	$^1/_2$	**034L0041**	$^1/_2$	**034L0043**
KVL 15	0.34	0.22	0.28	0.31	$^5/_8$	**034L0042**	$^5/_8$	**034L0049**
KVL 22	0.34	0.22	0.28	0.31			$^7/_8$	**034L0045**
KVL 28	1.60	0.74	0.96	1.08			$1^1/_8$	**034L0046**
KVL 35	1.60	0.74	0.96	0.96			$1^3/_8$	**034L0052**

1) Rated capacity is based on:
Maximum suction pressure p_s = 70 psig
Suction temperature t_s = 10°F
Condensing temperature t_c = 100°F
Pressure drop across regulator Δp = 2 psi

Note: The connection dimensions chosen must not be too small, as gas velocities in excess of 130 ft/s at the inlet of the regulator can result in flow noise.

Dimensions and weights

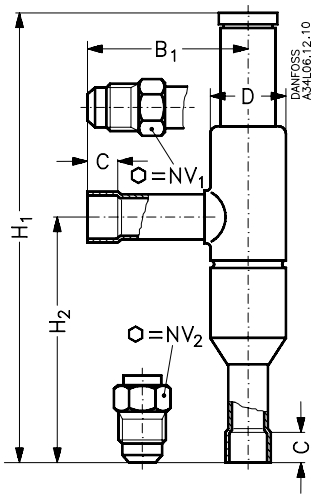

Type	Connection (in.)		H_1	H_2	B_1	C solder	∅D	Weight
	Flare	Solder ODF	in.	in.	in.	in.	in.	lbs.
KVL 12	$^1/_2$ in.	$^1/_2$ in.	7.05	3.90	2.52	0.38	1.18	0.90
KVL 15	$^5/_8$ in.	$^5/_8$ in.	7.05	3.90	2.52	0.50	1.18	0.90
KVL 22		$^7/_8$ in.	7.05	3.90	2.52	0.63	1.18	0.90
KVL 28		$1^1/_8$ in.	10.20	5.95	4.13	0.88	1.69	2.00
KVL 35		$1^3/_8$ in.	10.20	5.95	4.13	1.00	1.69	2.00

Metric conversions
1 in. = 25.4 mm
1 lb = 0.454 kg

© Danfoss Inc. 01-07 (USCO)

Introduction

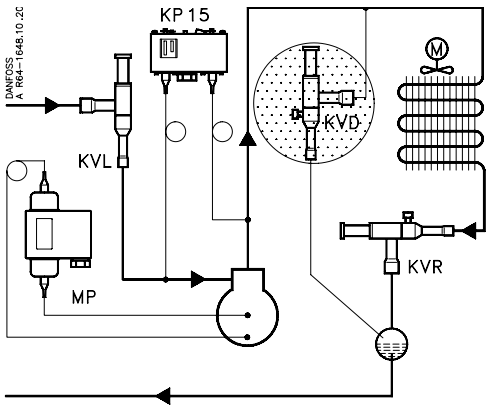

KVD is a modulating pressure regulator. It opens on falling receiver pressure and bypasses hot gas to maintain the receiver pressure at the regulator setting (adjustable).

KVD and KVR form a regulating system, used to maintain constant and adequately high condensing and receiver pressure in systems with heat-recovery, and in refrigeration and air conditioning systems with air-cooled condensers.

Features

Accurate, adjustable pressure regulation

Wide operating range

Pulsation damping design

Stainless steel bellows

Compact angle design for easy installation in any position

"Hermetic" brazed construction

$^1/_4$ in. access valve for pressure testing

Available with flare and ODF solder connections

For use with CFC, HCFC, HFC refrigerants

C UL US listed, file SA7200

Regulating range
- 45 to 290 psig
- Factory setting = 145 psig

Maximum working pressure:
- PS (MWP) = 400 psig

Maximum test pressure:
- p' = 450 psig

Maximum temperature of medium: 212°F

Minimum temperature of medium: –40°F

Metric conversions
1 psi = 0.07 bar
$^5/_9$ (t_1°F – 32) = t_2°C
1 in. = 25.4 mm

Ordering

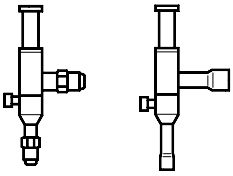

Type	Flare connection		Solder connection	
	in.	**Code no.**	in.	**Code no.**
KVD 12	1/2	**034L0171**	1/2	**034L0173**
KVD 15	5/8	**034L0172**	5/8	**034L0177**

The size of connection must not be chosen too small since gas velocities of more than 130 ft/s in the inlet can cause flow noise.

Dimensions and weights

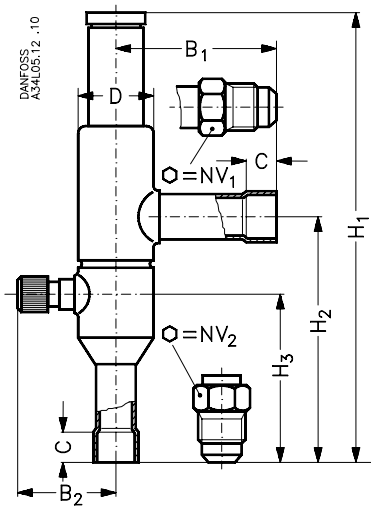

Type	Connection		NV_1	NV_2	H_1	H_2	H_3	B_1	B_2	C	dia. D	Weight
	Flare	Solder ODF										
	in.	in.	in.	in.	in.	in.	in.	in.	in.	in.	in.	lbs.
KVD 12	1/2	1/2	0.75	0.95	7.05	3.90	2.60	2.52	1.61	0.39	1.18	0.90
KVD 15	5/8	5/8	0.95	0.95	7.05	3.90	2.60	2.52	1.61	0.39	1.18	0.90

© Danfoss Inc. 01-07 (USCO)

Introduction

KPU pressure controls are designed for use in refrigeration and air-conditioning systems to protect the systems from excessively low suction pressure or too high discharge pressure. They can also be applied to start and stop compressors and the fans of air-cooled condensers.

KPU pressure controls, in single and dual versions cover a comprehensive range of applications, and are designed for use with fluorinated and non-aggressive refrigerants. All controls come with universal mounting bracket and hardware.

Features

Snap action electrical contacts minimize chatter, bounce, and wear, and ensure long-term electrical and mechanical reliability

The fail-safe dual bellows used in KPU 6 and KPU 16 prevent refrigerant loss and enable primature cut-out when a fault occurs

SPDT or SPST switch a in single control models. SPST or SPDT with high-low pressure signal in dual control models

Manual trip allows electrical function test without tools

Easily replaces Johnson Controls and Ranco products

Wide pressure range: from low pressure KPU 2 with narrow differential to KPU 6 and KPU 16 for high pressure refrigerants (R 410A, CO2)

Automatic, manual or convertible reset versions available

Vibration and shock resistant

Integrated bellows-spring assembly, computer design for maximum accuracy

Repeatability less then 0.1 psi drift, even after 400,000 cycles

Approvals

c㏌ UL listed for USA and Canada, file E31024 according to UL 873

CE-marked in accordance with EN 60947-4/-5

KPU6W, KPU6B, KPU16W and KPU16B:

CE-marked in accordance with PED 97/23/EC, category IV, safety equipment - EN 12263

Materials in contact with medium

Unit type	Material
KPU 1, 2, 5, 15	Tin bronze, no. 2.1020 to DIN 17662 Nickel plated free cutting steel, no. 1.0737/ 1.0718 to DIN 1651
KPU 6 and 16	Stainless steel bellows
KPU with capillary tube	Copper SF-CU no. 2.0090 to DIN 1787

Technical data

Ambient temperature
-40 to 122 °F (+ 175 °F for max 2 hours)

Maximum working pressure
Low pressure (LP) controls KPU 1, KPU 2 and LP side of KPU15, KPU16: 250 psig

High pressure (HP) controls
KPU 5 and KPU15 on HP side: 510 psig
KPU 6 and 16 on HP side: 675 psig

Maximum testing pressure
Low pressure (LP) controls
KPU 1 and KPU 2: 290 psig

High pressure (HP) controls
KPU 5 and KPU 15 on HP side: 505 psig
KPU 6 and 16 on HP side: 675 psig

Cable entry
7/8" cable entry for ½" male pipe thread connection (conduit boss)

Contact load
Alternating current:

FLA = 24 A @ 120 Vac
24 A @ 240 Vac

LRA = 144 A @ 120 Vac
144 A @ 240 Vac

Direct current:
240 V DC: 12W pilot duty

Alternating current (acc. to EN 60947)
AC1: 16 A, 400 V
AC3: 16 A, 400 V
AC15: 10 A, 400 V

Direct curent:
DC 13: 12 W, 220 V, control current

Wire dimension:
10 AWG maximum

Enclosure
NEMA 1 acc. to NEMA Standard Publication 250 - 1997

Ordering

Pressure controls for fluorinated refrigerant

Pressure	Control type	Low pressure (LP)		High pressure (HP)		Reset		Contact type	Code no.	
		Range psig	Differential psi	Range psig	Differential psi	Low pressure LP	High pressure HP		1/4" male flare	36" cap. tube w. 1/4" flare nut
Low	KPU 1	6" to 108	10 to 60			Aut.		A	**060-5231**	**060-5233**
Low	KPU 1	6" to 108	10 to 60			Aut.		B	**060-5236**	
Low	KPU 1	28" to 100	10 fixed			Man.		A	**060-5232**	**060-5234**
Low	KPU 2	6" to 73	6 to 30			Aut.		B	**060-5237**	**060-5235**
Low	KPU 2	6" to 73	6 to 30			Aut.		A	**060-5239**	**060-5240**
Fan cycling	KPU 5			100 to 465	25 to 85		Aut.	B	**060-5241**	**060-5242**
Dual	KPU 15	6" to 108	10 to 60	100 to 465	60 fixed	Aut.	Aut.	C	**060-5247**	**060-5248**
Dual	KPU 15	6" to 108	10 to 60	100 to 465	60 fixed	Aut.	Man.	C	**060-5249**	**060-5250**

Fail-safe controls for high pressure refrigerants (R410A, CO_2) ED approved according to EN 12263

Pressure	Control type	Low pressure (LP)		High pressure (HP)		Reset		Contact type	Code no.	
		Range psig	Differential psi	Range psig	Differential psi	Low pressure LP	High pressure HP		1/4" male flare	36" cap. tube w. 1/4" flare nut
High	KPU 6W			100 to 600	58 to 145		Aut.	A	**060-5243**	**060-5245**
High	KPU 6B			100 to 600	60 fixed		Man.	A	**060-5244**	**060-5246**
Dual	KPU 16W	6" to 108	10 to 60	100 to 600	60 fixed	Aut.	Aut.	D	**060-5251**	**060-5252**
Dual	KPU 16B	6" to 108	10 to 60	100 to 600	60 fixed	Conv.	Conv.	D	**060-5253**	**060-5254**

© Danfoss Inc. 01-07 (USCO)

Contact system and application

	Switch type	Switch action	Application
A	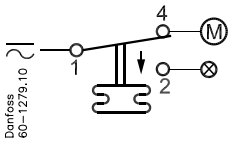 **SPDT**	1. Terminals 1-4 close high and open low Terminals 1-2 can be used as low pressure alarm 2. Terminals 1-2 open high and close low Terminals 1-4 can be used as high pressure alarm	1. Low pressure cut-out 2. High pressure cut-out
B	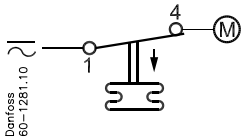 **SPST**	Terminals 1-4 close high and open low	1. Low pressure cut-out 2. Condenser fan cycling control
C	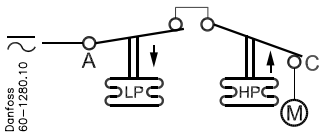 **SPST,** dual pressure (LP/HP)	Dual pressure control employs an SPST switch that is open when either high or low pressure beyond the control setting is sensed on the two bellows sensing elements of the control	Dual pressure control Protects the system against too low suction pressure and against too high discharge pressure
D	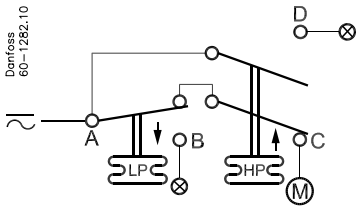 **SPDT** with LP/HP signal	Contact opens on pressure drop below LP set point (turns on the LP signal light) and on pressure rise above HP set point (turns on HP signal light). Contact action is controlled by two bellows sensing elements. Note: max. contact D rating is 50 VA	Dual pressure control. Protects the system against too low suction pressure (LP cut-out signal on terminal B) and against too high discharge pressure (HP signal on terminal D).

Ⓜ Load

⊗ Signal

Bellows movement on pressure drop

Bellows movement on pressure rise

Pressure control setting with convertible reset

	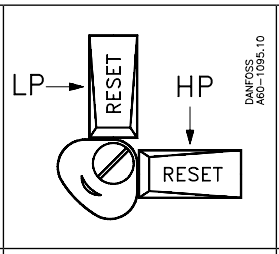	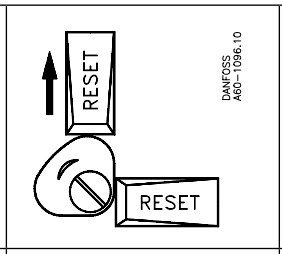	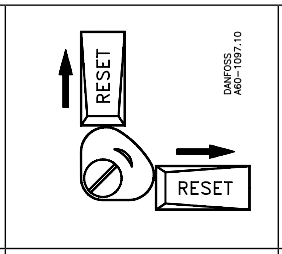	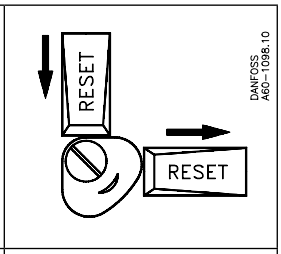
Low pressure	Manual reset [1]	Automatic reset	Automatic reset	Manual reset
High pressure	Manual reset [1])	Manual reset	Automatic reset	Automatic reset

[1]) Factory setting

Design and function

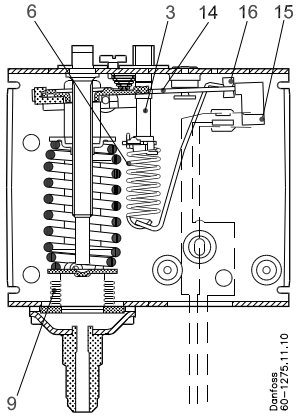

Key sketch of KPU kontrol

1. Low pressure (LP) setting spindle
2. High pressure (HP) setting spindle
3. Differential
4. Low pressure main spring
5. High pressure main spring
6. Differential spring
7. Ground terminal
8. Cable entry
9. Bellows
10. LP connection
11. HP connection
12. Control terminals
13. Reset button
14. Arm
15. Switch
16. Tumbler
17. Locking plate
18. Contact housing
19. Damping device

Switch function
The switch in KPU control has a snap-action function and the bellows moves only when cut-in or cut-out set point is reached.
This design has following advantages:
- high contact load
- ultra-short bounce time
- long mechanical and electrical lifetime
- high resistance to pulsation and vibrations

Reset
Version with automatic reset cut-in again automatically when the pressure falls or rises to the set point minus differential.
Version with manual reset have to be cut in manually with external reset button when the pressure in KPU 1 rises min. 10 psi above the set point value, and in KPU 6 falls min. 60 psi under the set point value.
All KPU pressure controls operate independently of changes in ambient temperature around the control. Therefore the setting for cut-out pressure and differential stay constant unless the permissible ambient temperature is exceeded.

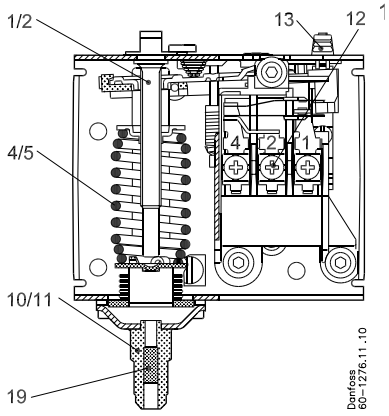

KPU single (KPU 1, 2, 5, 6) without front cover

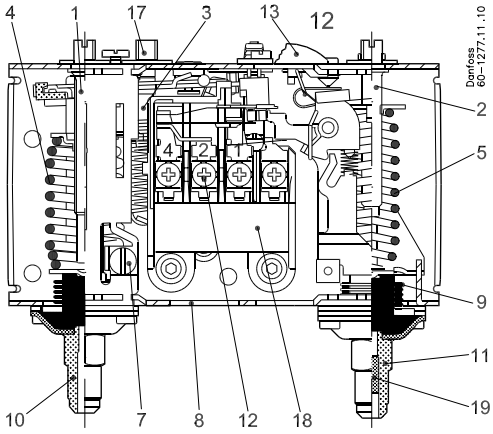

KPU dual (KPU 15, 16) without front cover

Fail-safe bellows concept
in KPU 6 and high pressure side of KPU 16.
1. Pressure connection
2. Regulating bellows
3. Outer bellows

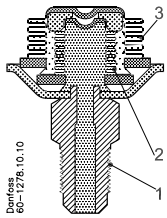

KPU 6 and high pressure side of KPU 16 have double bellows: an outer bellow and a regulating bellow. When system pressure exceeds the set value, the KPU will automatically stop the system. The double bellows system prevents the loss of charge in the event of bellows rupture.

Rupture in the outer bellows causes the control cut-out pressure to fall about 40 psi under the set value, thus providing fail-safe function.

© Danfoss Inc. 01-07 (USCO)

Dimensions and weight

KPU with flare connection

KPU single

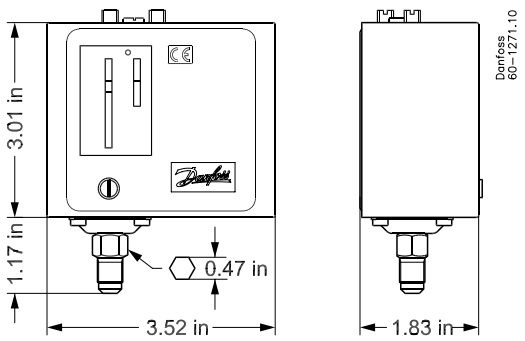

Approximate weight: 0.765 lb

KPU dual

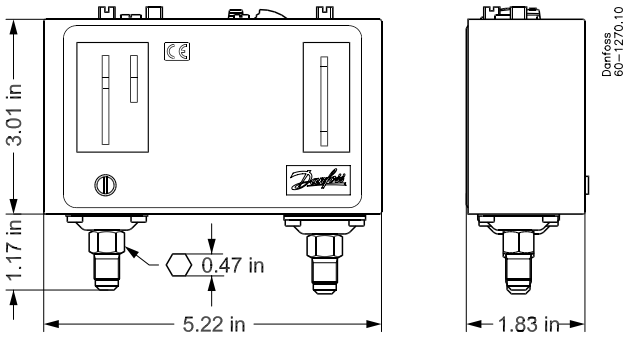

Approximate weight: 1.19 lb

KPU with capillary tube

KPU single

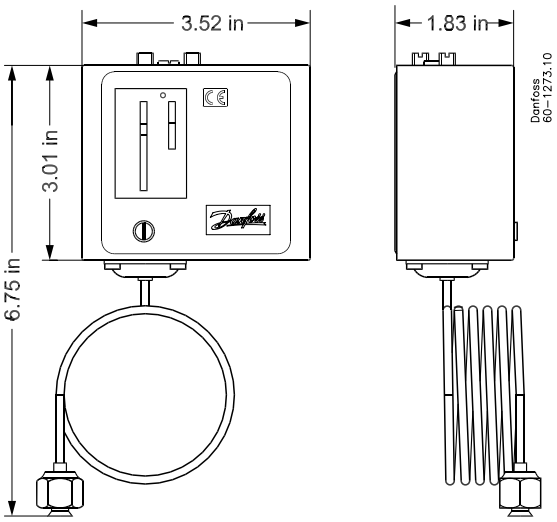

Approximate weight: 0.91 lb

KPU dual

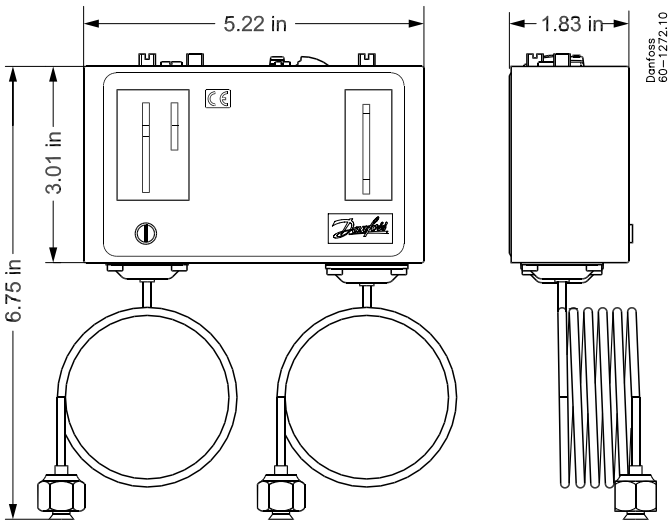

Approximate weight: 1.5 lb

All controls are supplied with universal mounting bracket and mounting screws as standard accessory.
Approximate weight of the bracket and mounting screws: 0.615 lb

Cross Reference List

Cross reference list - pressure and temperature controls, type KPU					
KPU		US adopted KP		Standard KP	
Type	**Code no.**	Type	**Code no.**	Type	**Code no.**
KPU 1	**060-5231**	KP 1	**060-200166**	KP 1	**060-110166**
KPU 1	**060-5233**	KP 1	**060-205166**	KP 1	**060-110566**
KPU 1	**060-5236**	KP 1	**None**	KP 1	**None**
KPU 1	**060-5232**	KP 1	**060-200266**	KP 1	**060-110366**
KPU 1	**060-5234**	KP 1	**060-205266**	KP 1	**None**
KPU 2	**060-5237**	KP 2	**None**	KP 2	**None**
KPU 2	**060-5235**	KP 2	**None**	KP 2	**None**
KPU 2	**060-5239**	KP 2	**060-201366**	KP 2	**060-112066**
KPU 2	**060-5240**	KP 2	**060-206366**	KP 2	**060-503766**
KPU 5	**060-5241**	KP 5	**060-201466**	KP 5	**060-117166**
KPU 5	**060-5242**	KP 5	**060-206466**	KP 5	**060-001866**
KPU 15	**060-5247**	KP 15	**060-200866**	KP 15	**060-124166**
KPU 15	**060-5248**	KP 15	**060-205866**	KP 15	**060-119966**
KPU 15	**060-5249**	KP 15	**060-202666**	KP 15	**060-114866**
KPU 15	**060-5250**	KP 15	**060-203066**	KP 15	**060-000766**
KPU 6W	**060-5243**	KP 7W	**060-200366**	KP 6W	**060-519066**
KPU 6W	**060-5245**	KP 7W	**060-205366**	KP 6W	**None**
KPU 6B	**060-5244**	KP 7B	**060-200466**	KP 6B	**060-519166**
KPU 6B	**060-5246**	KP 7B	**060-205466**	KP 6B	**None**
KPU 16W	**060-5251**	KP 16W	**None**	KP 17W	**060-127566**
KPU 16W	**060-5252**	KP 17W	**060-202966**	KP 16W	**None**
KPU 16B	**060-5253**	KP 16B	**None**	KP 17B	**060-126866**
KPU 16B	**060-5254**	KP 17B	**060-211366**	KP 16B	**None**
KPU-61	**060L5201**	KP-61	**060L2000**	KP-61	**060L1100**
KPU-61	**060L5202**			KP-61	**060L1101**
KPU-61	**060L5203**			KP-61	**060L1103**
KPU-61	**060L5204**	KP-61	**060L2005**	KP-61	**060L1105**
KPU-61	**060L5205**				
KPU-61	**060L5210**			KP-61	**060L1128**
KPU-62	**060L5206**			KP-62	**060L1106**
KPU-63	**060L5213**	KP-63	**060L2007**	KP-63	**060L1107**
KPU-63	**060L5214**	KP-63	**060L2008**	KP-63	**060L1108**
KPU-68	**060L5215**	KP-68	**060L2016**	KP-68	**060L1111**
kPU-69	**060L5217**	KP-69	**060L2009**	KP-69	**060L1112**
KPU-62	**060L5207**			KP-62	**060L1110**
KPU-71	**060L5218**	KP-71	**060L2010**	KP-71	**060L1113**
KPU-71	**060L5216**	KP-71	**060L2011**	KP-71	**060L1115**
KPU-73	**060L5208**	KP-73	**060L2017**		
KPU-73	**060L5209**			KP-73	**060L1117**
KPU-73	**060L5211**				
KPU-73	**060L5212**			KP-73	**060L1118**
KPU-74	**060L5219**	KP-73	**060L2029**		
KPU-74	**060L5220**				
KPU-75	**060L5221**				**060L1120**
KPU-75	**060L5222**	KP-75	**060L2020**		**060L1137**
KPU-77	**060L5223**	KP-77	**060L2021**		**060L1121**

© Danfoss Inc. 01-07 (USCO)

Introduction

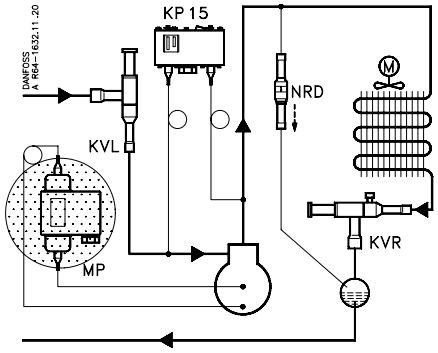

MP 54 and MP 55 oil differential pressure controls are used as safety switches to protect refrigeration compressors against low lubricating oil pressure.

If the oil pressure drops, the control will stop the compressor after a predetermined time period has elapsed.

MP 54 and 55 are used in refrigerating systems using CFC, HCFC, HFC.

MP 54 has a fixed differential pressure setting. It also incorporates a thermal time relay with a fixed release time setting.

MP 55 has adjustable differential pressure and is available with thermal time relay.

Features

Fixed and adjustable differentials available

240 or 120 V a.c. or d.c. control voltage

Simple manual trip, electrical test function eliminates need of tools and test “jumper” wires

Extremely narrow switch differential accuracy

Reliable, long life stainless steel bellows

Sturdy metal cover and universal mounting hole patterns

Integral $^1/_2$ NPSM swivel cable connector allows direct attachment of $^1/_2$ in. male pipe thread connector

Standard four-wire hook-up

Refrigerants
CFC, HCFC, HFC

Ⓤ listed for USA and Canada, file E31024

Maximum bellows temperature: 212°F

Temperature compensation
- The time relay is temperature-compensated in the range –40 to 140°F

Switch differential:
- Maximum 2.8 psi

Maximum working pressure:
- MWP = 245 psig

Maximum test pressure:
- p’ = 320 psig

Control voltage:
- 240 V or 120 V a.c. or d.c.

Permissible voltage variation:
- +10 to –15%

Contact load of time relay output contacts M-S
- 240 V a.c.: 2 FLA
- 240 V a.c.*: 0.2 FLA

* Not approved for d.c. application

Cable entry
Integral $^1/_2$ in. female NPSM swivel cable connector allows direct attachment of $^1/_2$ in. male pipe thread connector.

Enclosure
- NEMA 1; IP 20 to IEC 529

Ordering

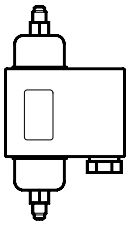

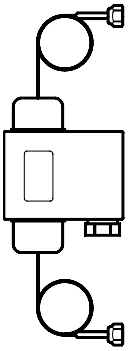

Type	Control differential Δp psi	Regulation range LP side in. Hg to psig	Time relay delay time in seconds	Pressure connection			Code no.
				1/4 in. flare	36 in. capillary tube	88 in. capillary tube	
MP 54	fixed 6.0	29 in. to 170	45	+			60B2008 1)
MP 54	fixed 6.0	29 in. to 170	45		+		60B2050 1)
MP 54	fixed 6.0	29 in. to 170	45			+	60B2058
MP 54	fixed 6.0	29 in. to 170	60		+		60B2059
MP 54	fixed 9.0	29 in. to 170	60	+			60B2001
MP 54	fixed 9.0	29 in. to 170	60		+		60B2051
MP 54	fixed 9.0	29 in. to 170	90	+			60B2002
MP 54	fixed 9.0	29 in. to 170	120	+			60B2003 2)
MP 54	fixed 9.0	29 in. to 170	120		+		60B2053 2)
MP 55	4.3 to 64	29 in. to 170	45		+		60B2054
MP 55	4.3 to 64	29 in. to 170	60	+			60B2012 3)
MP 55	4.3 to 64	29 in. to 170	90	+			60B2006
MP 55	4.3 to 64	29 in. to 170	90		+		60B2056
MP 55	4.3 to 64	29 in. to 170	120	+			60B2007
MP 55	4.3 to 64	29 in. to 170	120		+		60B2057

1) Corresponds to CARRIER/CARLYLE specifications.
2) Corresponds to COPELAND specifications.
Three-wire hook-up.
3) With operational light that remains on during normal operation of compressor.
Note: When time delay is energized which also means that min. permissible oil pressure (differential Δp) is reached, light goes out.

Dimensions and weights

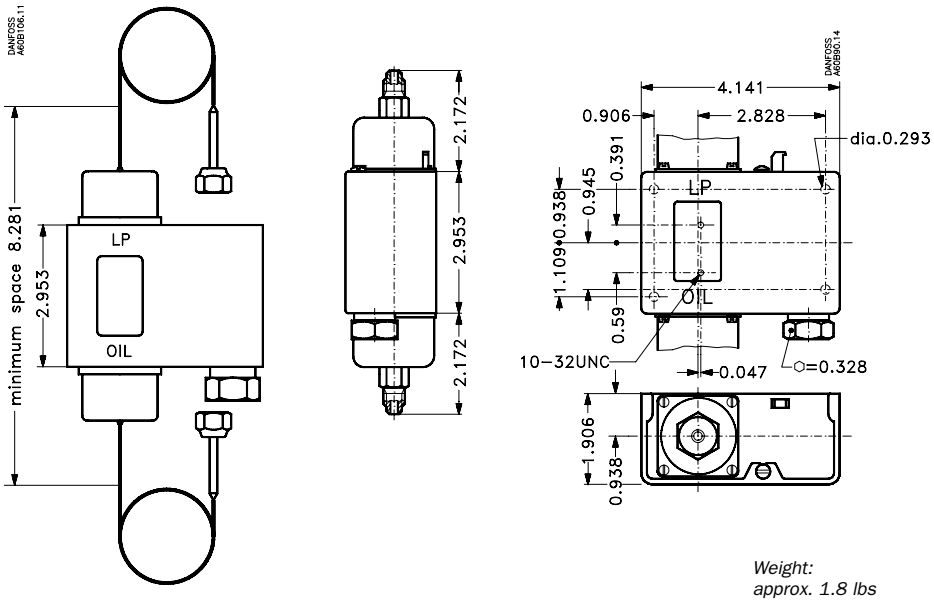

MP 54, 55

Weight: approx. 1.8 lbs

© Danfoss Inc. 01-07 (USCO)

Introduction

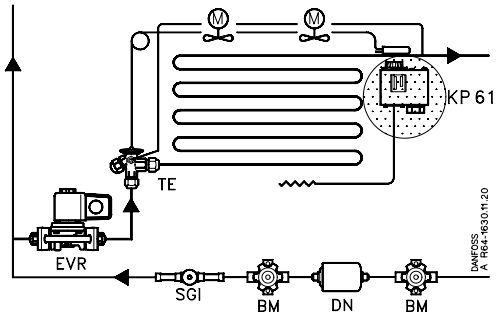

KPU thermostats are temperature-controlled electrical switches, which are applied for regulation and safety monitoring of refrigeration and air conditioning systems. KPU sensors are available with vapor charge or with adsorption charge. Thermostats with adsorption charge are widely used to give frost protection, while vapor charged sensors are used where small differential is required. All KPU temperature controls have a single pole double throw (SPDT) contact system. The position of the switch depends on the thermostat setting and the bulb temperature.

Features

Wide temperature regulating range allows use in low, medium, and high temperature refrigeration application and air-conditioning systems

Snap-action electrical contacts minimize chatter, bounce and wear, and ensure long-term electrical and mechanical reliability

Fingertip manual trip feature allows contact function testing without tools

Easily replaces other manufacturers' thermostats

Ultra-short bounce time

Long operating lifetime

Integrated bellows-spring assembly, computer design for maximum accuracy and repeatability

Vibration and shock resistant

SPDT switch allows NC or NO function option as well as alarm capability

Automatic and manual reset versions available

Approvals

c(UL) UL listed for USA and Canada, file E31024

Technical data

Ambient temperature
–40 to 122 °F , 175 °F up to 2 hours.

Cable entry
7/8" cable entry for ½" male pipe thread connection (conduit boss)

Maximum wire dimension
10 AWG

Enclosure
NEMA 1

Switch
SPDT - single pole double throw

Contac load
Alternating current

FLA = 24 A @ 120 Vac
24 A @ 240 Vac

LRA = 144 A @ 120 Vac
144 A @ 240 Vac

Direct current
12 W pilot duty @ 240 Vdc

Alternating current (acc. to EN 60947)
AC1: 16 A, 400 VA
AC3: 16 A, 400 VA
AC15: 10 A, 400V

Direct current
DC 13: 12 W, 220 V control current

Regulating ranges in °F

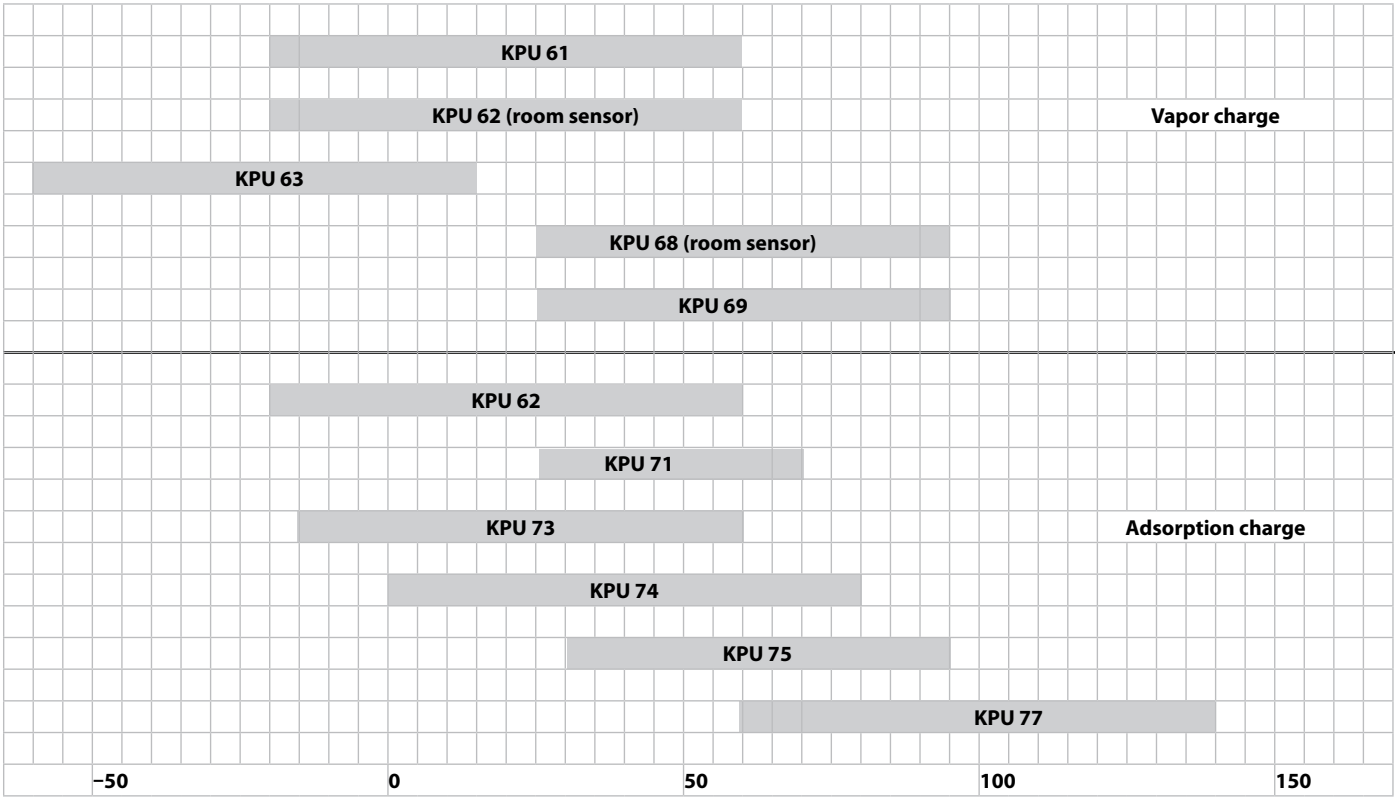

Ordering

Charge	Type	Bulb type	Range [°F]	Differential at lowest temperature setting [°F]	Differential at highest temperature setting [°F]	Max. bulb temp. [°F]	Reset function	Cpaillary tube length [in.]	Code no.
Vapour (1)	KPU 61	A	–20 to 60	8 to 40	2.5 to 13	250	auto.	80	**060L5201**
	KPU 61	A	–20 to 60	8 to 40	2.5 to 13		auto.	200	**060L5202**
	KPU 61	B	–20 to 60	8 to 40	2.5 to 13		auto.	80	**060L5203**
	KPU 61	B	–20 to 60	fixed 10	fixed 3.5		man. (3)	80	**060L5204**
	KPU 61	B	–20 to 60	fixed 10	fixed 3.5		man. (3)	200	**060L5205**
	KPU 62	C1	–20 to 60	8 to 40	2.5 to 13		auto.	room sensor	**060L5206**
	KPU 61	B	–20 to 60	8 to 40	2.5 to 13		auto. (4)	80	**060L5210**
	KPU 63	A	–60 to 15	18 to 125	5 to 15		auto.	80	**060L5213**
	KPU 63	B	–60 to 15	18 to 125	5 to 15		auto.	80	**060L5214**
	KPU 68	C1	25 to 95	8 to 45	3 to 13		auto.	room sensor	**060L5215**
	KPU 69	B	25 to 95	8 to 45	3 to 13		auto.	80	**060L5217**
Adsorption (2)	KPU 62	C2	–20 to 60	9 to 36	3 to 14	175	auto. (4)	room sensor	**060L5207**
	KPU 73	E3	–15 to 60	6 to 18	5 to 50		auto.	80	**060L5208**
	KPU 73	E1	–15 to 60	22 to 125	15 to 45		auto.		**060L5209**
	KPU 73	E3	–15 to 60	fixed 6	fixed 6		man. (3)		**060L5211**
	KPU 73	D	–15 to 60	6 to 35	5 to 32		auto.		**060L5212**
	KPU 71	E2	25 to 70	5.5 to 18	4 to 6		auto.		**060L5218**
	KPU 71	E2	25 to 70	fixed 5	fixed 5		man. (3)		**060L5216**
	KPU 74	E1	0 to 80	9 to 35	9 to 35		auto.		**060L5219**
	KPU 74	E1	0 to 80	fixed 10	fixed 10		man. (3)		**060L5220**
	KPU 75	F	30 to 95	6 to 29	4.5 to 21.5	230	auto.		**060L5221**
	KPU 75	E2	30 to 95	6 to 30	4.5 to 22	230	auto.		**060L5222**
	KPU 77	E3	60 to 140	6 to 18	6.3 to 18	265	auto.		**060L5223**

© Danfoss Inc. 01-07 (USCO)

Thermostat sensor types

A	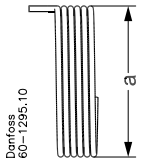	Straight capillary tube Sensing length: 15″ a = 3 ″	KPU 61 KPU 63 Vapor charge
B	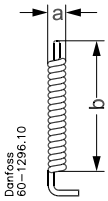	Remote air coil a = 3 ″ b = 2¾″	KPU 61 KPU 69 Vapor charge
C	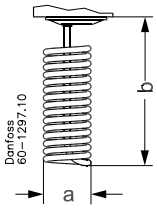	Room sensor C1 a = 1½″ b = 1¼″ Room sensor C2 a = 1″ b = 3″	KPU 62 KPU 68 Vapor charge KPU 62 Adsorption charge
D	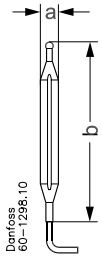	Double contact remote bulb a = ″ b = 3 ″ NOTE! Can not be used in sensor pocket	KPU 73 Adsorption charge
E	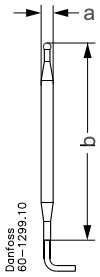	Remote bulb E1 a = ¼ b = 3¾″ E2 a = ″ b = 4½ ″ E3 a = ″, b = 3 ″	KPU 73, KPU 74 Adsorption charge KPU 71, KPU 75 Adsorption charge KPU 73, KPU 77 Adsorption charge
F	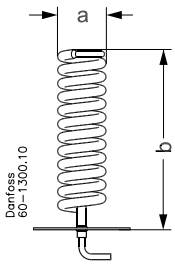	Remote duct coil a = 1″ b = 3 ″	KPU 75 Adsorption charge

Dimensions of KPU without capillary tube

weight of KPU without capillary tube ~ 0.77 lb
weight of 80” cap. tube ~ 0.17 lb
weight of 200” cap tube ~ 0.43 lb

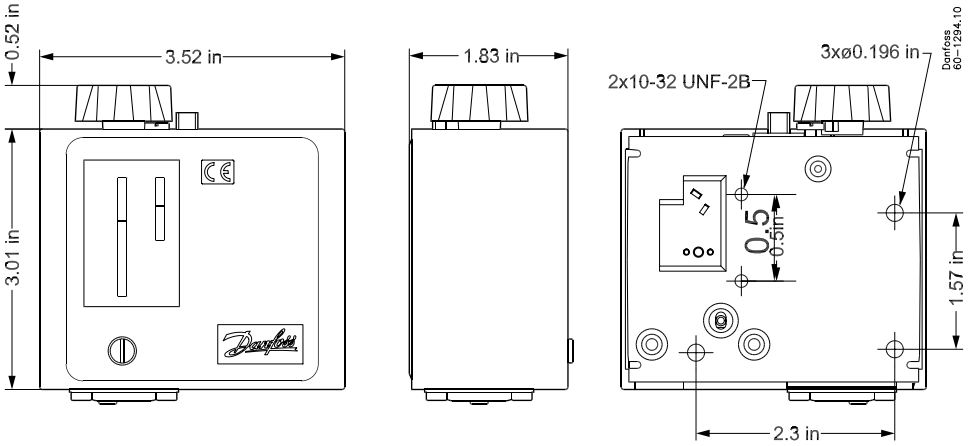

All controls are supplied with universal mounting bracket and mounting screws as standard accessory.

Approximate weight of the bracket and mounting screws: 0.615 lb

© Danfoss Inc. 01-07 (USCO)

Introduction

The UT thermostat is a temperature-controlled electric switch with copper capillary and sensor.

The temperature can be set easily and accurately using the large knob on the front of the thermostat. The temperature must be set to correspond to the required mean temperature.

The thermostat has a fixed differential. Electric connections are made by means of AMP quick connectors. UT is available for wall or panel mounting, and can be used for:

- Cold rooms
- Beverage coolers
- Ice cream makers
- Milk coolers
- Refrigerated counters
- Air-conditioning plant
- Heat recovery systems

Approvals

CE-marked according to the low voltage directive EN 60335-1 and the electromagnetic compatibility directives EN 60335-1, and in accordance with the EMC Directive EN 50082-1 and EN 55014.

Technical data

Range	–20 → 85 °F
Ambient temperature	–20 → 130 °F
Reset	Automatic
Differential	Fixed, 2.3 K
Switch system	Changeover (SPDT) switch

Contact load (max.)	16 (2.5) A / 250 V ~ 10 (1.5) A / 400 V ~
Capillary tube and sensor	Copper
UT for wall mounting: UT for building in:	IP 20 to EN 60529/IEC 529 IP 00 to EN 60529/IEC 529

Code numbers

Version	Type	Differential K	Reset	Max. sensor temperature °F	Capillary tube length m	Capillary tube length in.	Qty.	**Code no.**
Wall mounting	UT 72	2.3	aut.	140	3.0	59	1	**060H1108**

Accessories

Setting knobs (–20 → 85 °F)	48	**060-1068**

Dimensions and weight

UT for wall mounting (weight 0.44 lbs)

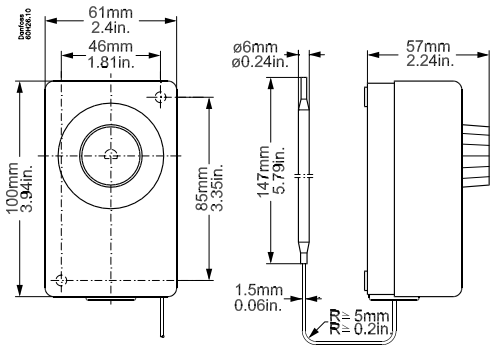

UT for panel mounting (weight 0.22 lbs)

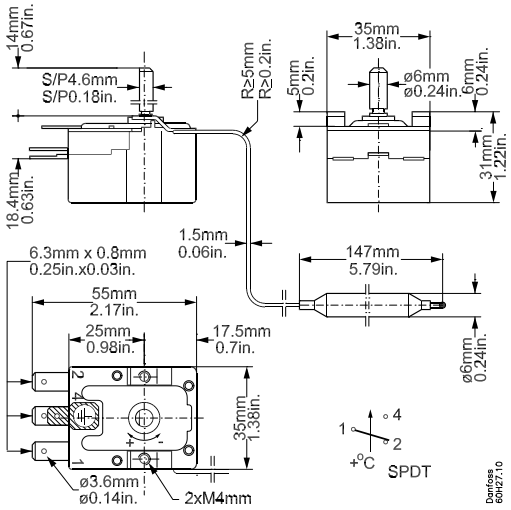

Introduction

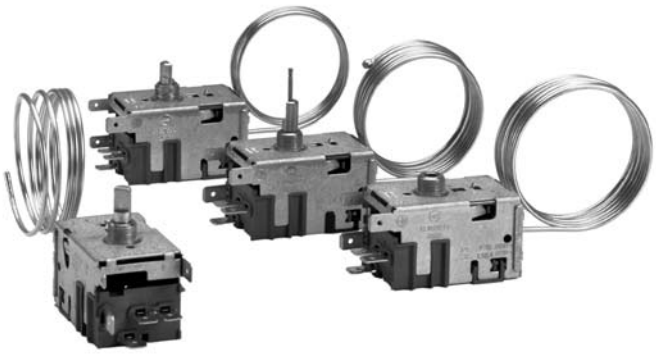

Thermostat 077B is used to control the temperature in refrigerators, upright and chest freezers, liquid coolers, bottle coolers and small commercial refrigeration appliances. The thermostat can be used as an evaporator thermostat or a room thermostat.

The thermostats are available with normal function, fixed cut-in and cut-out temperature, constant or variable cut-in temperature for automatic defrost, and with a pushbutton for semi-automatic defrost.

The thermostats can be supplied with the following supplementary functions:

- Auxiliary contact
- Changeover contact
- Signal contact
- Series contact
- Reduction of temperature for super-function and indication of same

All thermostats have normal function, i.e. they cut in the compressor current circuit on rising temperature.

Features

Temperature control in the interval –44˚F to +52˚F.

Cut-out temperature interval (difference between cut-out temperature in position cold and cut-out position warm) from 41°F to 68°F.

Differentials (differences between cut-in and cut-out temperature) between 39˚F and 59˚F in position warm. For thermostats with fixed setting, from 37˚F.

With automatic defrost the cut-out temperature lies between –23˚F and –44˚F, the cut-in temperature between +34˚F and +52˚F.

Other temperature settings can be supplied by arrangement.

$^1/_4$ in or .19 in tabs.

Wide range with various extra functions and accessories.

Approved by recognized authorities.

Ordering

No.	Application	Temperatures ˚F				Accessories						Adaptor	Capillary tube length ft.	Remarks	Code no.
		Warm pos. cut-in/cut-out	Cold pos. cut-in/cut-out	Signal pos. warm	Defrosting	Big Knob	Small Knob	Push Button	Mounting Bracket	Seal Cap	Small parts				
1	Refrigerators	-35.6/22.1	8.6/-13			•	•		•		•	•	4.3		**077B7001**
2	Refrigerators with pushbutton defrost	32/18.5	12.2/-5.8		42.8	•	•	•	•		•	•	4.3		**077B7002**
3	Refrigerators with automatic defrost	38.3/12.2	38.3/-17.5			•	•		•		•	•	5.2	with auxiliary switch	**077B7003**
4	Absorption Refrigerators	38.3/30.2	23/12.2			•	•		•		•	•	4.9	with auxiliary switch	**077B7004**
5	Ice-cream cabinets and freezers without signal	18.5/5	-5.8/-26.5				•		•	•	•	•	7.5		**077B7005**
6	Freezers with active signal	14/1.4	-11.2/-30.1	21.2			•		•	•	•	•	7.5	with active signal	**077B7006**
7	Freezers with passive signal	14/1.4	-11.2/-30.1	21.2			•		•	•	•	•	7.5	with passive signal	**077B7007**
8	Bottle and liquid coolers	52.7/42.8	30.2/16.7			•	•		•	•	•	•	6.6		**077B7008**

© Danfoss Inc. 01-07 (USCO)

Introduction

Cartridge Controls, ACB series

The ACB series cartridge controls are small, disc type pressure controls designed and manufactured to ensure quality and reliable performance in applications including air conditioners, chillers, display cases, ice machines and other refrigeration systems. They are compact and light-weight for easy mounting directly on the refrigeration system where pressure regulation is required. Used by major OEMs worldwide, the ACB series have more than 100 million pieces installed.

Features

Water proof IP65, open type IP40

Contact load up to 8A (250V.AC), 6A for manual reset model

Automatic or manual reset

High and low pressure cut-in and cut-out and fan speed control

Normally closed (NC) or normally open (NO)

SPST or SPDT contact system

Corrosion resistant housing

c UL us approvals (CE, TUV, VDE, and CSA models are available upon request)

Wide range of port fittings for soldering or direct mounting. (Sweat, Flare, NPT and other fittings are available.)

Spade terminals or cables connection

Specifications:
- Used with CFC, HCFC, HFC
- (Model for CO2 is available)

Pressure range from –1.5 in Hg to 650 PSI

Media temp: -65˚ to 275˚F

Ambient temp: -22˚ to 212˚F

Ordering

These are standard high and low pressure cut-out models. Water proof type IP65.

Danfoss Code no.	Application	Reset	Cut out (PSI)	Cut in (PSI)	Contact Style	Connection 1/4" Solder 0.12" insertion	Connection 1/4" Female Flare w/ depressor pin	Cable Length (inches)
061F7505	High pressure switch	Auto	260±10	190±17	SPST-NC	X		59±2
061F7506		Auto	260±10	190±17	SPST-NC		X	59±2
061F8494		Auto	335±10	275±17	SPST-NC		X	59±2
061F9714		Manual	380±15	290±30	SPST-NC	X		59±2
061F9713		Manual	380±15	290±30	SPST-NC		X	59±2
061F7508		Auto	377±14	290±21	SPST-NC	X		59±2
061F7509		Auto	377±14	290±21	SPST-NC		X	59±2
061F7513		Auto	405±14	305±21	SPST-NC	X		59±2
061F7514		Auto	405±14	305±21	SPST-NC		X	59±2
061F8492		Auto	450±14	350±22	SPST-NC		X	59±2
061F9575		Manual	610±17	480±29	SPST-NC		X	59±2
061F7516		Auto	610±17	480±30	SPST-NC	X		59±2
061F7517		Auto	610±17	480±30	SPST-NC		X	59±2
061F7519	Low pressure switch	Auto	7±6	22±5	SPST-NO	X		59±2
061F7520		Auto	7±6	22±5	SPST-NO		X	59±2
061F7522		Auto	10±7	25±6	SPST-NO	X		59±2
061F7523		Auto	10±7	25±6	SPST-NO		X	59±2
061F7525		Auto	25±7	40±6	SPST-NO	X		59±2
061F7526		Auto	25±7	40±6	SPST-NO		X	59±2
061F8490	Fan cycle control	Auto	125±17	160±12	SPST-NO		X	59±2
061F8333		Auto	190±22	230±14	SPST-NO		X	59±2

Introduction

Thermostats, TB series

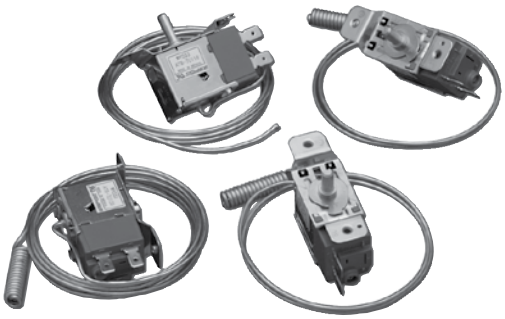

TB series thermostats are available with custom specifications and accessories for OEMs with a wide standard range for refrigerators, freezers, beverage cooler, and air conditioners applications.

Features

Standard 6 amp. at 240V.AC
Available at 16 amp, 20amp and 25 amp.
Available options for: narrow and wide differential, manual start/automatically reset defrost, damper control
Customized accessories including dial knob, scale plate, fixing screws, insulation sleeves 2pcs and receptacle terminals
SPST or SPDT options available
Models with c UL us and C SP US approval are available.

Specifications:
- Available temperature range: -31˚ to 212˚F

Max temperature range:
- 64.4˚F (gas charge)
- 140˚F (cross ambient charge)

Differential: 3.6˚ to 19.8˚F

Ts: Ambient temp at switch body TB: Ambient temp at sensing bulb SPST or SPDT Contact system

Saginomiya Model No.	Danfoss Code No.	Operating Temperatures							Max Sensing Element Temp.	Temperature	Contact Style	Electrical	Application
		Cold		Normal		Warm		Forced					
		ON	OFF	ON	OFF	ON	OFF	OFF		Condition	Condition	Ratings	
ATB-6U101	061G5502		(5)	28.4+/-2.7	14.9+/-2.7	(50)		With	176	Ts > TB	SPST	16A/120V.AC	Refrigerator
ATB-6U102	061G5503		(-9.4)	5 +/-2.7	-4 +/-2.7	(10.4)		With	176	Ts > TB	SPST	16A/120V.AC	Freezer
ATB-6U103	061G5504	42.8+/-2.7	34.7+/-2.7	-	-	(51.8)		With	176	Ts > TB	SPST	16A/120V.AC	Beverage Cooler
YTB-7U128	061G5505	(65.3)	60.8+/-2.7	-	-	(87.8)	(84.2)	-	176	Ts > TB	SPST	20A/240V.AC	Room air conditioner
YTB-7U317	061G5506	(65.3)	60.8+/-2.7	-	-	(94.1)	(89.6)	-	140	Ts TB	SPDT	20A/240V.AC	Heat/Cool air conditioner
ITB-7U108	061G5507	(60.8)	55.4+/-2.7	-	-	(89.6)	(86)	-	176	Ts > TB	SPST	25A/240V.AC	Room air conditioner

© Danfoss Inc. 01-07 (USCO)

Introduction

Condenser Fan Speed Control, RGE Series

Designed and optimized for precisely controlling the speed of a condenser fan of packaged air-conditioning units, condensing units, and other units that operate year round, RGE series control keep condensing pressure constant in winter and intermediate seasons for stable operation.

Features

Available in single phase and three phase versions

All in one senses pressure and controls fan speed

Reliable structure of the pressure-sensing element with bellows

Enbables low noise operation

Operation selectable for minimum speed operation or cut-off operation

An external forced operation switch can be connected

C US listed, CE certified.

Ordering

Danfoss Code No.	Catalog No.	F.V.S. Setting Adjusting Range (psi)[1]	E.P.B. (psi) Fixed[2]	Max. Working Pressure (psi)	Eletrical Rating		Function	Ambient Temp. (°F)	Refrigerants	Factory Set (psi)	Wt. (kg)
					Voltage	Ampere					
061H3045	RGE-Z1L4-7DS	116 to 406	87	681	Single phase 200 to 240V AC 50/60Hz	0.2 to 2A	At approx. 45% (50Hz) at approx 35% (60Hz). Cut Off or Minimum Speed function is selectable with changeover switch. Default setting: Cut Off	-4 to 131	R22, R404A, R407C (R134a)	276[3]	0.36
061H3005	RGE-Z1N4-7DS		58			0.2 to 4A					0.50
061H3008	RGE-ZIP4-7DS					0.2 to 6A					0.54
061H3009	RGE-ZIQ4-7DS					0.2 to 8A					0.58
061H3048	RGE-Z1L6-7DS	232 to 566	116			0.2 to 2A			R410A	464	0.36
061H3021	RGE-Z1N6-7DS					0.2 to 4A					0.50
061H3022	RGE-Z1P6-7DS					0.2 to 6A					0.54
061H3023	RGE-Z1Q6-7DS					0.2 to 8A					0.58
061H3003	RGE-Z3R4-7DS	116 to 406	58	681	Three phase 200 to 240V AC 50/60Hz	0.2 to 5A	At approx. 35%, Cut Off or Minimum Speed function is selectable with changeover switch. Default setting: Min. speed	-4 to 122	R22, R404A, R407C (R134a)	232[3]	1.40
061H3050	RGE-Z3T4-7DS		87			0.2 to 7A					1.53
061H3027	RGE-Z3R6-7DS	232 to 566	116			0.2 to 5A			R410A	464	1.40
061H3051	RGE-Z3T6-7DS					0.2 to 7A					1.53
061H3006	RGE-X3R4-7DS	116 to 406	58		Three phase 380 to 415V AC 50/60Hz	0.2 to 5A		5 to 122	R22, R404A, R407C (R134a)	232[3]	1.40
061H3028	RGE-X3R6-7DS	232 to 566	116						R410A	464	

[1] The pressure at which the control delivers 95% output effective voltage (VRMS).
[2] Pressure width where effective voltage corresponds to the minimum speed or causes cut off operation.
[3] When the refrigerant is R134a, please change the pressure setting.
Minimum speed: Fan motor will be kept running at minimum speed when pressure decreases to the set value, (the specific value (V%)).
Cut off: Fan motor will be stopped when pressure decreases to the specific value (V%) for R.M.S.

Introduction

4 Way Reversing Valves, STF and VHV series

STF and VHV are pilot operated, 4-way reversing valves suitable for applications including unitary, split system and window type air-conditioning systems. These robust valves are engineered to provide power savings and are available in a wide selection of connection sizes and styles for air conditioning units of various sizes.

Features

Different connection pipe size and configuration are available.

Reliable changeover operation by 4-way pilot valve

Unique design ensures reduced pressure drop

Full capacity range up to 50 TR

Minimize leakage

Splash proof resin encapsulated solenoid coil

Max. working pressure: 600 psig

Temperature of medium: -5 to +250°F
VHV-20, 25, 30, 40, 50: -5 to +265°F

Ambient temperature: -5 to +135°F

Available for: R22, R134a, R407C, R410A

Coil Voltage : 24V.AC, 115 to 120 VAC, 230 V. AC 50/60 Hz, 208 to 240V.AC 50Hz and others are available.

Coil with Quick Connect terminals or Coil with lead wires available.

c UL us approved

STF ; UL Recognized

Danfoss Code No.	Capacity from Minimum to Nominal			Connection (inch) ODF (Standard configuration in bold)		Configurations available (Standard configurations in bold)*	Box Qty.
	Saginomiya Model No.	R22 Applicable (Value for reference)	R410A Applicable (Value for reference)	Discharge (D)	E.S.C		
		TR	TR				
061L1200	STF-01U1G3	0.45 - 1.35	0.46 - 1.59	**5/16**	**3/8**	**A**	50
061L1210	STF-02U1G3	0.8 - 2.57	0.8 - 3.03	5/16, **3/8**, 1/2	**1/2**, 5/8	**A**, B, C, D	40
061L1211	STF-02U2G3	0.51 - 2.57	0.8 - 3.03				40
061L1212	STF-02U4G3	0.8 - 2.57	0.8 - 3.03		1/2, **5/8**	A, B, C, **D**	40
061L1213	STF-02U9G3	0.8 - 2.57	0.8 - 3.03		**1/2**, 5/8	A, **B**, C, D	40
061L1214	STF-02U8G3	0.8 - 2.57	0.88 - 3.03		1/2, **5/8**	A, B, **C**, D	40
061L1220	STF-03U6G3	1.28 - 3.1	1.51 - 3.7	3/8, **1/2**	5/8, **3/4**	**E**	36
061L1230	STF-04U1G3	2.02 - 5.7	2.36 - 6.7	**1/2**, 5/8, 3/4	**3/4**, 7/8	**B**	20
061L1231	STF-04U9G3	2.02 - 5.7	2.36 - 6.7		3/4, **7/8**	**B**	20
061L1232	STF-04U20G3	2.02 - 6.5	2.4 -7.7			**B**	20
061L1240	STF-07U19G3	5.12 - 9.7	6.0 - 11.4	**1/2**, 5/8, 3/4, 7/8	**7/8**, 1-1/8	**B**	12
061L1243	STF-07U12G3	5.12 - 9.7	6.0 - 11.4	1/2, 5/8, **3/4**, 7/8	**7/8**, 1-1/8	**B**	12

© Danfoss Inc. 01-07 (USCO)

VHV; UL Recognized

Danfoss Code No.	Capacity from Minimum to Nominal			Connection (inch) ODF (Standard configuration in bold)		Configurations available (Standard configurations in bold)*	Box Qty.
	Saginomiya Model No.	R22 Applicable (Value for reference)	R410A Applicable (Value for reference)	Discharge (D)	E.S.C		
		TR	TR				
061L1260	VHV-15U11G3	9.53 - 10.8	11.1 -12.7	**7/8**	**1-1/8**	**F**	8
061L1261	VHV-20U11G3	9.53 - 13.8	11.1 - 16.3	**7/8**, 1-1/8	**1-1/8**, 1-3/8	**B**, F	8
061L1262	VHV-25U1G3	12.8 - 20.8	14.8 - 24.6	**1**	**1-1/4**	**G**	1
061L1263	VHV-30U1G3	15.9 - 29.3	18.4 - 34.7	**1-1/4**	**1-1/2**	**G**	1
061L1264	VHV-40U1G3	28.4 - 40.9	32.7 - 48.4	**1-1/2**	**1-3/4**	**G**	1
061L1265	VHV-50U1G3	35.6 -53.2	41.2 - 62.8	**1-1/2**	**2-1/8**	**G**	1

Nominal capacity is based on Pressure Drop = 2.1 psi, condensing temperature = 100°F, evaporating temperature = 41°F and superheat = 9°F

*See diagrams below for body configurations

For non-standard configurations, please contact Danfoss Inc.
Not all connection size combinations are available.

Configurations

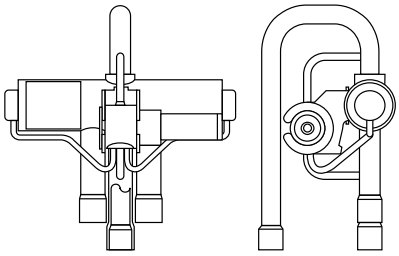

A = Candycane x Straight

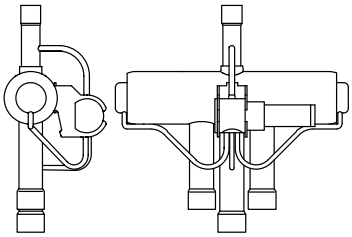

B = Straight x Straight

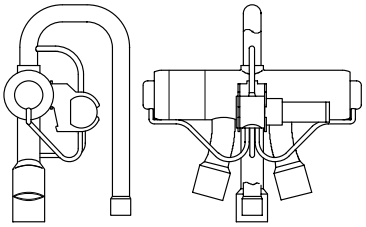

C = Candycane x Flare

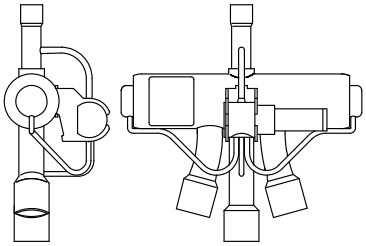

D = Straight x Flare

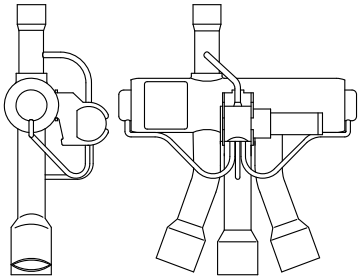

E = Offset x Flare

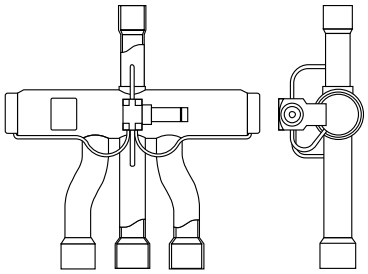

F = Straight x Flare

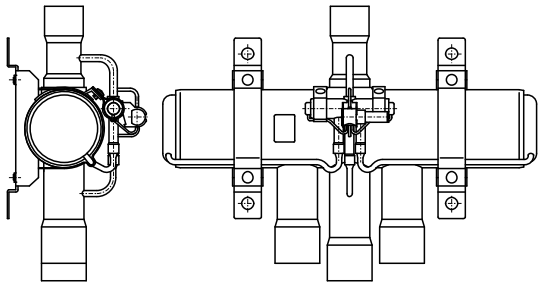

G = Straight x Straight (for large capacity)

Introduction

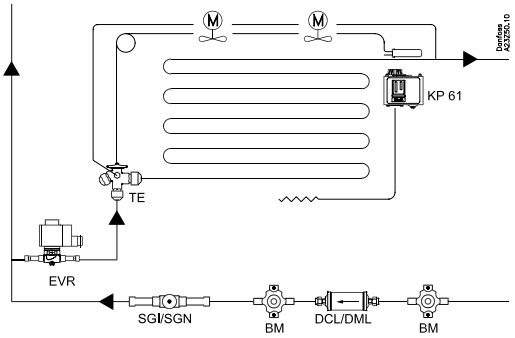

***Eliminator*®** liquid line filter driers protect refrigeration and air-conditioning systems from moisture, acids, and solid particles. With these contaminants eliminated, systems are safer from harmful chemical reactions and from abrasive impurities.

There are two types of ***Eliminator*®** cores. Type DML driers have a core composition of 100% Molecular Sieve, while type DCL contain 80% Molecular Sieve with 20% activated alumina.

All ***Eliminator*®** driers have a solid core with binding material held to an absolute minimum. Core selection is primarily based on the refrigerant oil used in the system.

***Eliminator*®** type DML, with a solid core of 100% Molecular Sieve, is optimized for use with HFC refrigerants and polyolester (POE) or polyalkyl glycol (PAG) oils. Type DML driers are designed for applications requiring high water adsorption, and can be used with any manufacturer's compressor. Because type DML driers contain no activated alumina, oil additives will not be depleted.

***Eliminator*®** type DCL, with a solid core of 80% Molecular Sieve and 20% activated alumina, is the drier of choice for systems with HCFC and CFC refrigerants and mineral or alkyl benzene oils. Type DCL driers are particularly suited for systems that operate at high condensing temperatures and require high drying capacity.

Features

The Core

Type DML

100% 3Å Molecular Sieve core.

High drying capacity minimizing the risk of acid formation (hydrolysis).

Optimized for HFC refrigerants (R134a, R404A, R410A, etc.) with POE or PAG oils.

Compatible with R22.

Will not deplete oil additives.

Type DCL

80% 3Å Molecular Sieve with 20% activated alumina.

Perfect core blend for systems that operate at high condensing temperatures and require high drying capacity.

Optimized for CFC and HCFC refrigerants (R22, R502, etc.) with mineral or alkyl benzene oils. Compatible with HFC's and refrigerant blends.

The Shell

UL approved for Max Working Pressure up to 610 psig.

Available with solder (copper) and flare connections.

Compact 3 cubic inches drier ideal for refrigeration and air conditioning units.

Corrosion resistant powder-painted finish. Can be used in all environments including marine applications.

Allows installation with any orientation provided the arrow is in the flow direction.

Available in sizes from 3 to 75 cubic inches.

The Filter

25 µm (0.001 in.) filter provides high retention with minimal pressure drop.

Thermally stable up to 250°F.

C UL US file no. SA 6398
PED 97/23/EC - a3p3

© Danfoss Inc. 01-07 (USCO)

Ordering

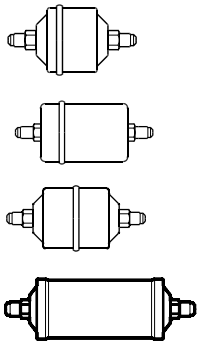

Flare				DCL
Type	Conn. in.	Code no.	Conn. mm	Code no.
DCL 032*	1/4	023Z5000	6	023Z5000
DCL 032	1/4	023Z5075	6	023Z5075
DCL 033*	3/8	023Z5001	10	023Z5001
DCL 033	3/8	023Z5089	10	023Z5089
DCL 052	1/4	023Z5002	6	023Z5002
DCL 053	3/8	023Z5003	10	023Z5003
DCL 082	1/4	023Z5004	6	023Z5004
DCL 083	3/8	023Z5005	10	023Z5005
DCL 084	1/2	023Z5006	12	023Z5006
DCL 162	1/4	023Z5007	6	023Z5007
DCL 163	3/8	023Z5008	10	023Z5008
DCL 164	1/2	023Z5009	12	023Z5009
DCL 165	5/8	023Z5010	16	023Z5010
DCL 166	3/4	023Z5011	19	023Z5011
DCL 303	3/8	023Z0012	10	023Z0012
DCL 304	1/2	023Z0013	12	023Z0013
DCL 305	5/8	023Z0014	16	023Z0014
DCL 306	3/4	023Z0156	19	023Z0156
DCL 413	3/8	023Z0101	10	023Z0101
DCL 414	1/2	023Z0102	12	023Z0102
DCL 415	5/8	023Z0103	16	023Z0103

* Wire mesh in filter drier outlet

Flare				DML
Type	Conn. in.	Code no.	Conn. mm	Code no.
DML 032*	1/4	023Z5035	6	023Z5035
DML 033*	3/8	023Z5036	10	023Z5036
DML 033	3/8	023Z5090	10	023Z5090
DML 052	1/4	023Z5037	6	023Z5037
DML 053	3/8	023Z5038	10	023Z5038
DML 082	1/4	023Z5039	6	023Z5039
DML 083	3/8	023Z5040	10	023Z5040
DML 084	1/2	023Z5041	12	023Z5041
DML 085	5/8	023Z5073	16	023Z5073
DML 162	1/4	023Z5042	6	023Z5042
DML 163	3/8	023Z5043	10	023Z5043
DML 164	1/2	023Z5044	12	023Z5044
DML 165	5/8	023Z5045	16	023Z5045
DML 166	3/4	023Z5046	19	023Z5046
DML 303	3/8	023Z0049	10	023Z0049
DML 304	1/2	023Z0050	12	023Z0050
DML 305	5/8	023Z0051	16	023Z0051
DML 306	3/4	023Z0193	19	023Z0193
DML 413	3/8	023Z0108	10	023Z0108
DML 414	1/2	023Z0109	12	023Z0109
DML 415	5/8	023Z0110	16	023Z0110

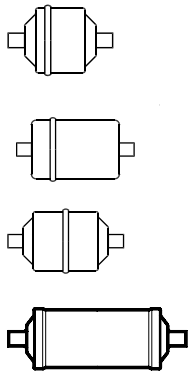

Solder (copper)				DCL
Type	Conn. in.	Code no.	Conn. mm	Code no.
DCL 032s	1/4	023Z5013	6	023Z5012
DCL 032.5s	5/16	023Z5014	8	023Z5014
DCL 033s	3/8	023Z5015	10	023Z5016
DCL 052s	1/4	023Z5018	6	023Z5017
DCL 052.5s	5/16	023Z5114	8	023Z5114
DCL 053s	3/8	023Z5019	10	023Z5020
DCL 082s	1/4	023Z5022	6	023Z5021
DCL 082.5s	5/16	023Z5116	8	023Z5116
DCL 083s	3/8	023Z5023	10	023Z5024
DCL 084s	1/2	023Z5026	12	023Z5025
DCL 162s	1/4	023Z5028	6	023Z5027
DCL 162.5s	5/16	023Z5118	8	023Z5118
DCL 163s	3/8	023Z5029	10	023Z5030
DCL 164s	1/2	023Z5032	12	023Z5031
DCL 165s	5/8	023Z5033	16	023Z5033
DCL 166s	3/4	023Z5070	19	023Z5070
DCL 167s	7/8	023Z5034	22	023Z5034
DCL 303s	3/8	023Z0030	10	023Z0196
DCL 304s	1/2	023Z0031	12	023Z0198
DCL 305s	5/8	023Z0032	16	023Z0032
DCL 306s	3/4	023Z0033	18	023Z0216
DCL 307s	7/8	023Z0034	22	023Z0034
DCL 309s	1 1/8	023Z0035	28	023Z0200
DCL 414s	1/2	023Z0104	12	023Z0227
DCL 415s	5/8	023Z0105	16	023Z0105
DCL 417s	7/8	023Z0106	22	023Z0106
DCL 419s	1 1/8	023Z0107	28	023Z0202
DCL 604s	1/2	023Z0241	12	023Z0221
DCL 607s	7/8	023Z0036	22	023Z0036
DCL 609s	1 1/8	023Z0037	28	023Z0204
DCL 757s	7/8	023Z0115	22	023Z0115
DCL 759s	1 1/8	023Z0116	28	023Z0206

Solder (copper)				DML
Type	Conn. in.	Code no.	Conn. mm	Code no.
DML 032s	1/4	023Z5048	6	023Z5047
DML 032.5s	5/16	023Z5049	8	023Z5049
DML 033s	3/8	023Z5050	10	023Z5051
DML 034s	1/2	023Z5121	12	023Z5123
DML 052s	1/4	023Z5053	6	023Z5052
DML 052.5s	5/16	023Z5115	8	023Z5115
DML 053s	3/8	023Z5054	10	023Z5055
DML 054s	1/2	023Z5101	12	023Z5099
DML 055s	5/8	023Z5100	16	023Z5100
DML 082s	1/4	023Z5057	6	023Z5056
DML 082.5s	5/16	023Z5117	8	023Z5117
DML 083s	3/8	023Z5058	10	023Z5059
DML 084s	1/2	023Z5061	12	023Z5060
DML 085s	5/8	023Z5072	16	023Z5072
DML 162s	1/4	023Z5063	6	023Z5062
DML 162.5s	5/16	023Z5119	8	023Z5119
DML 163s	3/8	023Z5064	10	023Z5065
DML 164s	1/2	023Z5067	12	023Z5066
DML 165s	5/8	023Z5068	16	023Z5068
DML 166s	3/4	023Z5071	19	023Z5071
DML 167s	7/8	023Z5069	22	023Z5069
DML 303s	3/8	023Z0067	10	023Z0197
DML 304s	1/2	023Z0068	12	023Z0199
DML 305s	5/8	023Z0069	16	023Z0069
DML 306s	3/4	023Z0070	19	023Z0070
DML 307s	7/8	023Z0071	22	023Z0071
DML 309s	1 1/8	023Z0072	28	023Z0201
DML 414s	1/2	023Z0111	12	023Z0228
DML 415s	5/8	023Z0112	16	023Z0112
DML 417s	7/8	023Z0113	22	023Z0113
DML 419s	1 1/8	023Z0114	28	023Z0203
DML 604s	1/2	023Z0224	12	023Z0229
DML 606s	3/4	023Z0225	19	023Z0225
DML 607s	7/8	023Z0073	22	023Z0073
DML 609s	1 1/8	023Z0074	28	023Z0205
DML 757s	7/8	023Z0117	22	023Z0117
DML 759s	1 1/8	023Z0118	28	023Z0207

Ordering

Liquid Line Filter Driers-Suggested Size					DCL and DML type
Tonnage	Line Size	Air Conditioning		Refrigeration	
		R12, R22 & R502	R134, R404A, R410A & R507	R12, R22 & R502	R134A, R404A, R507 & R507
1/4 -> 1/3	1/4	DCL 032s	DML 032s	DCL 032s	DML 032s
	5/16	DCL 0325s	DML 0325s	DCL 0325s	DML 0325s
	3/8	DCL 033s	DML 033s	DCL 033s	DML 033s
	1/2	-	DML 034s	-	DML 034s
1/2 -> 1	1/4	DCL 052s	DML 052s	DCL 082s	DML 082s
	5/16	DCL 0525s	DML 0525s	DCL 0825s	DML 0825s
	3/8	DCL 053s	DML 053s	DCL 083s	DML 083s
	1/2	-	DML 054s	DCL 084s	DML 084s
	5/8	-	DML 055s	-	DML 085s
1 1/2 -> 2 1/2	1/4	DCL 082s	DML 082s	DCL 162s	DML 162s
	5/16	DCL 0825s	DML 0825s	DCL 1625s	DML 1625s
	3/8	DCL 083s	DML 083s	DCL 163s	DML 163s
	1/2	DCL 084s	DML 084s	DCL 164s	DML 164s
	5/8	-	DML 085s	DCL 165s	DML 165s
	3/4	-	-	DCL 166s	DML 166s
	7/8	-	-	DCL 167s	DML 167s
3 -> 6	1/4	DCL 162s	DML 162s	-	-
	5/16	DCL 1625s	DML 1625s	-	-
	3/8	DCL 163s	DML 163s	DCL 303s	DML 303s
	1/2	DCL 164s	DML 164s	DCL 304s	DML 304s
	5/8	DCL 165s	DML 165s	DCL 305s	DML 305s
	3/4	DCL 166s	DML 166s	DCL 306s	DML 306s
	7/8	DCL 167s	DML 167s	DCL 307s	DML 307s
	1 1/8	-	-	DCL 309s	DML 309s
7 -> 9	3/8	DCL 303s	DML 303s	DCL 413	DML 413
	1/2	DCL 304s	DML 304s	DCL 414s	DML 414s
	5/8	DCL 305s	DML 305s	DCL 415s	DML 415s
	3/4	DCL 306s	DML 306s	-	-
	7/8	DCL 307s	DML 307s	DCL 417s	DML 417s
	1 1/8	DCL 309s	DML 309s	DCL 419s	DML 419s
10 -> 12	3/8	DCL 413	DML 413	DCL 413	DML 413
	1/2	DCL 414s	DML 414s	DCL 414s	DML 414s
	5/8	DCL 415s	DML 415s	DCL 415s	DML 415s
	7/8	DCL 417s	DML 417s	DCL 417s	DML 417s
	1 1/8	DCL 419s	DML 419s	DCL 419s	DML 419s
13 -> 18	1/2	DCL 604s	DML 604s	DCL 604s	DML 604s
	3/4	-	DML 606s	-	DML 606s
	7/8	DCL 607s	DML 607s	DCL 607s	DML 607s
	1 1/8	DCL 609s	DML 609s	DCL 609s	DML 609s
19 -> 30	7/8	DCL 757s	DML 757s	DCL 757s	DML 757s
	1 1/8	DCL759s	DML 759s	DCL759s	DML 759s

DCL should not be used with refrigerants that have POE which contains additives. The additives render the activated alumina ineffective for acid absorption. DML should be used in applications with POE which contains additives.

© Danfoss Inc. 01-07 (USCO)

Identification

Type codes		
Filter drier	D	
Solid core	C M	80 / 20% composite core 100% Molecular Sieve core
Application	L	Liquid line
Size (volume)	03 05 08 16 30 41 60 75	3 in.^{3} 5 in.^{3} 8 in.^{3} 16 in.^{3} 30 in.^{3} 41 in.^{3} 60 in.^{3} 75 in.^{3}
Connection (filter connection in $^1/_8$ of an inch increments)	2 2.5 3 4 5 6 7 9	$^1/_4$ in. $^5/_{16}$ in. $^3/_8$ in. $^1/_2$ in. $^5/_8$ in. $^3/_4$ in. $^7/_8$ in. $1^1/_8$ in.
Connection type	(blank) s	Flare connection Solder connection

Example for type codes					
D	C	L	05	3	s

Selection

Type selection is made considering the application			
		DCL	DML
Refrigerant	HFC	Can be used	Recommended
	HCFC	Recommended	Can be used
	CFC	Recommended	Not recommended [1)]
Oil	Mineral or AB	Recommended	Can be used
	POE or PAG, pure	Can be used	Recommended
	POE or PAG, with additives	Not recommended [2)]	Recommended

1) For CFC systems, DCL filter driers are recommended. In these systems, circumstances may require the use of a filter drier with acid adsorbing properties.
2) Use of filter driers containing activated alumina are not recommended in systems with oils containing additives.

Introduction

Range 8-60 cubic inches

Eliminator® burnout drier type DAS is used in the suction line to clean up refrigeration and AC-systems with fluorinated refrigerants after a compressor motor burnout.

The solid core, which is composed of 70% activated alumina and 30% Molecular Sieve, absorbs harmful acids as well as moisture. By absorbing these acids, the DAS burnout drier protects the new compressor against premature failure.

Features

Solid core with 70% activated alumina and 30% Molecular Sieve for absorption of acid and moisture

2 Schrader access valves to measure pressure drop across the drier

Available in sizes from 8 to 60 cubic inches

Corrosion resistant powder-painted finish

Available with solder (solid copper) and flare connections

UL approved for MWP 500 psig

120 mesh wire mesh provides solid particle retention with minimal pressure drop

Allows installation with any orientation provided the flow is in the arrow direction

C UL US, file SA 6398
PED 97/23/EC - a3p3

Capacities

	Rated capacity, Q_n 1)			Acid capacity 2)
	R22/R407C/R410A	R134a	R404A/R507	
	[TR]	[TR]	[TR]	[g]
DAS 083 DAS 084 DAS 085 DAS 086	1.7 2.9 4.1 5.4	1.0 1.6 2.6 3.3	1.3 2.3 3.6 4.7	3.5
DAS 164 DAS 165 DAS 166 DAS 167	3.0 4.3 5.7 6.3	1.7 2.7 3.4 3.9	2.4 3.7 4.9 5.4	7.8
DAS 305 DAS 306 DAS 307 DAS 309	5.1 6.3 7.4 8.9	3.1 4.0 4.6 5.7	4.3 5.4 6.3 7.7	16.2
DAS 417 DAS 419	8.6 10.0	5.1 6.3	7.1 8.6	23.0
DAS 607	5.7	3.4	4.9	32.5

1) Rated capacity is stated at:
evaporating temperature t_e = 40°F
pressure drop Δp = 3 psi

2) Absorption capacity of oleic acid at 0.05 TAN (Total Acid Number).

Capacities for other temperatures than 40°F are calculated by use of correction factors. Divide your actual evaporator capacity with the correction factor given for your actual evaporating temperature.

Look up the capacity table for the necessary rated capacity.

$Q_e / F_e = Q_n$
Q_e = Actual evaporator capacity
Q_n = Nominal capacity
F_e = Correction factor

© Danfoss Inc. 01-07 (USCO)

Ordering

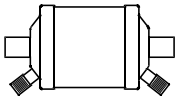

Eliminator Burnout drier, Type DAS						
Flare Connection						
Code no.	Type	nominal rating R22 TR	Acid capac.	conn. size	overall length	weight lbs.
023Z1001	DAS 083VV	1.7	3.5	3/8"	6.2"	1.12
023Z1002	DAS 084VV	2.9	3.5	1/2"	6.5"	1.37
023Z1007	DAS 164VV	3	7.8	1/2"	6.9"	2.01
023Z1008	DAS 165VV	4.3	7.8	5/8"	7.2"	2.09
Solder Connection						
Code no.	Type	nominal rating R22 TR	Acid capac.	conn. size	overall length	weight lbs.
023Z1003	DAS 083sVV	1.7	3.5	3/8"	5.5"	1
023Z1004	DAS 084sVV	2.9	3.5	1/2"	5.6"	1.1
023Z1005	DAS 085sVV	4.1	3.5	5/8"	5.9"	1.1
023Z1006	DAS 086sVV	5.4	3.5	3/4"	6.3"	1.1
023Z1009	DAS 164sVV	3	7.8	1/2"	6"	2.03
023Z1010	DAS 165sVV	4.3	7.8	5/8"	6.2"	1.9
023Z1011	DAS 166sVV	5.7	7.8	3/4"	6.7"	1.9
023Z1012	DAS 167sVV	6.3	7.8	7/8"	6.8"	1.9
023Z1013	DAS 305sVV	5.1	16.2	5/8"	9.2"	2.9
023Z1014	DAS 306sVV	6.3	16.2	3/4"	9.7"	2.9
023Z1015	DAS 307sVV	7.4	16.2	7/8"	9.8"	2.9
023Z1016	DAS 309sVV	8.9	16.2	11/8"	9.8"	3
023Z1017	DAS 417sVV	8.6	23	7/8"	9.8"	4.6
023Z1018	DAS 419sVV	10	23	11/8"	9.8"	4.6
023Z1019	DAS 607sVV	5.7	32.5	7/8"	15.7"	5.3
023Z1020	DAS 609sVV	6.2	32.5	11/8"	15.7"	5.3

Identification

Type codes			
Filter drier	D		
Solid core	A	Burn out, 70% activated alumina, 30% molecular sieves	
Application	S	Suction line	
Size (volume)	08 16 30 41 60	8 in.^{3} 16 in.^{3} 30 in.^{3} 41 in.^{3} 60 in.^{3}	
Connection (filter connection in 1/8 of an inch increments)	3 4 5 6 7 9	3/8 in. 1/2 in. 5/8 in. 3/4 in. 7/8 in. 1 1/8 in.	
Connection type	(blank) s	Flare connection Solder connection	
Access valves	(blank) V V V	Inlet: No access valves Schraeder valve Schraeder valve	Outlet: No access valves Schraeder valve

Example for type codes						
D	A	S	08	3	s	VV

Introduction

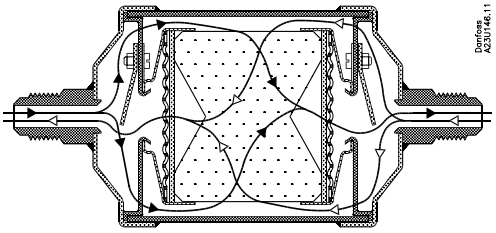

Bi-flow filter driers, type DMB/DCB, are for use in liquid lines on heat pumps.

Bi-flow filter driers have built-in check valves which ensure that refrigerant liquid always flows through the filter driers from the outer side of the filter core towards the center. Thus all dirt particles are retained irrespective of flow direction.

DMB/DCB filter driers ensure fast and effective adsorption of moisture as well as organic and inorganic acids.

When building heat pump systems, the use of Bi-flow filters can, depending on the type of system, save up to ten solder connections. This reduces production costs and the number of potential leakage points.

DMB filter driers
- These filters contain a solid core consisting of 100% Molecular Sieve (no activated aluminum oxide whatsoever).
- DMB filter driers are especially suitable for heat pumps with HFC refrigerant and polyolester oil with additives.

DCB filter driers
- These filters contain a solid core consisting of 3Å Molecular Sieve and activated aluminum oxide.
- DCB filter driers can be used in heat pumps with HCFC refrigerants and mineral oil, and also with HFC refrigerants and polyolester oil.

Features

Optimum flow characteristics and dirt retention

The check valves are not sensitive to dirt and give minimum restriction, irrespective of flow direction

Effective dirt removal to 25 µm

No dirt released by reversing the flow direction

Available with solder (copper) and flare connections

SP US UL file no. SA 6398
PED 97/23/EC - a3p3

© Danfoss Inc. 01-07 (USCO)

Capacities

Drying and liquid capacity (DCB)												R134a, R507, R404A, R407C, R410A, R22
Type	Liquid capacity [TR] 2)			Drying capacity [lbs. refrigerant] 1)								Max Working Pressure PS [psig]
	R134a	R404A R507	R22 R407C R410A	R134a R507		R404A		R407C R410A		R22		
				75°F	125°F	75°F	125°F	75°F	125°F	75°F	125°F	
DCB 082 / 082s	1.1	0.8	1.2	18.3	16.8	17.2	15.7	15.4	13.7	17.2	15.4	610
DCB 083 / 083s	2.1	1.5	2.3									610
DCB 084 / 084s	2.4	1.7	2.6									610
DCB 162	2.2	1.5	2.5	34.4	31.3	32.0	29.3	28.9	25.6	32.2	29.1	610
DCB 163 / 163s	5.1	3.7	5.7									610
DCB 164 / 164s	8.0	5.7	9.1									610
DCB 165 / 165s	10.6	8.3	11.4									610
DCB 303	5.4	4.3	6.0	84.7	76.7	78.9	72.3	70.8	62.8	79.1	71.4	610
DCB 304 / 304s	8.0	5.7	8.9									610
DCB 305 / 305s	10.9	8.0	12.0									610
DCB 307s	12.3	9.1	13.4									507

Drying and liquid capacity (DMB)												R134a, R507, R404A, R407C, R410A, R22
Type	Liquid capacity [TR] 2)			Drying capacity [lbs. refrigerant] 1)								Max Working Pressure PS [psig]
	R134a	R404A R507	R22 R407C R410A	R134a R507		R404A		R407C R410A		R22		
				75°F	125°F	75°F	125°F	75°F	125°F	75°F	125°F	
DMB 082 / 082s	1.1	0.8	1.2	20.3	18.7	19.2	17.9	17.6	16.1	19.2	17.6	610
DMB 083 / 083s	2.1	1.5	2.3									610
DMB 084 / 084s	2.4	1.7	2.6									610
DMB 162	2.2	1.5	2.5	39.2	36.4	37.0	34.6	34.0	31.1	37.0	34.4	610
DMB 163 / 163s	5.1	3.7	5.7									610
DMB 164 / 164s	8.0	5.7	9.1									610
DMB 165 / 165s	10.6	8.3	11.4									610
DMB 303	5.4	4.3	6.0	95.9	89.1	90.4	84.7	83.3	76.3	90.8	84.0	610
DMB 304 / 304s	8.0	5.7	8.9									610
DMB 305 / 305s	10.9	8.0	12.0									610
DMB 307s	12.3	9.1	13.4									507

1) Drying capacity is based on following moisture content test standards before and after drying:
R 134a: From 1050 ppm W to 75 ppm W. If drying to 50 ppm W is required, reduce stated capacities by 15%.R 404A, R 507: From 1020 ppm W to 30 ppm W.
R 407C: From 1020 ppm W to 30 ppm W.
R 410A: From 1050 ppm W to 60 ppm W.
R 22: From 1050 ppm W to 60 ppm W in accordance with ARI 710-86.

2) Capacity given in accordance with ARI 710-86
t_e = 5°F (–15°C)
t_c = 86°F (30°C)
Δp = 1 psig (0.07 bar).

Capacities

DMB

Flare

Type	Connection size (in.)	Code no.	Liquid capacity R22 (Tons)	Weight (lb.)
DMB 082	1/4	023Z1412	1.2	1.1
DMB 083	3/8	023Z1411	2.3	1.1
DMB 084	1/2	023Z1410	2.6	1.3
DMB 162	1/4	023Z1416	2.5	1.8
DMB 163	3/8	023Z1415	5.7	1.8
DMB 164	1/2	023Z1414	9.1	2
DMB 165	5/8	023Z1413	11.4	2
DMB 303	3/8	023Z1419	6	2.4
DMB 304	1/2	023Z1418	8.9	2.7
DMB 305	5/8	023Z1417	12	2.7

Sweat

Type	Connection size (in.)	Code no.	Liquid capacity R22 (Tons)	Weight (lb.)
DMB 082s	1/4	023Z1443	1.2	1.1
DMB 083s	3/8	023Z1442	2.3	1.1
DMB 084s	1/2	023Z1441	2.6	1.1
DMB 163s	3/8	023Z1446	5.7	1.8
DMB 164s	1/2	023Z1445	9.1	1.8
DMB 165s	5/8	023Z1444	11.4	2
DMB 304s	1/2	023Z1449	8.9	2
DMB 305s	5/8	023Z1448	12	2.4
DMB 307s	7/8	023Z1447	13.4	2.4

DCB

Flare

Type	Connection size (in.)	Code no.	Liquid capacity R22 (Tons)	Weight (lb.)
DCB 082	1/4	023Z1402	1.2	1.1
DCB 083	3/8	023Z1401	2.3	1.1
DCB 084	1/2	023Z1400	2.6	1.3
DCB 162	1/4	023Z1406	2.5	1.8
DCB 163	3/8	023Z1405	5.7	1.8
DCB 164	1/2	023Z1404	9.1	2
DCB 165	5/8	023Z1403	11.4	2
DCB 303	3/8	023Z1409	6	2.4
DCB 304	1/2	023Z1408	8.9	2.7
DCB 305	5/8	023Z1407	12	2.7

Sweat

Type	Connection size (in.)	Code no.	Liquid capacity R22 (Tons)	Weight (lb.)
DCB 082s	1/4	023Z1434	1.2	1.1
DCB 083s	3/8	023Z1433	2.3	1.1
DCB 084s	1/2	023Z1432	2.6	1.1
DCB 163s	3/8	023Z1437	5.7	1.8
DCB 164s	1/2	023Z1436	9.1	1.8
DCB 165s	5/8	023Z1435	11.4	2
DCB 304s	1/2	023Z1440	8.9	2
DCB 305s	5/8	023Z1439	12	2.4
DCB 307s	7/8	023Z1438	13.4	2.4

© Danfoss Inc. 01-07 (USCO)

Introduction

DCR filter driers with interchangeable solid cores are for use in liquid and suction lines in refrigeration, freezing and air conditioning systems with fluorinated refrigerants.

The block holders are designed for use in compact units where limited space makes it difficult to insert cores in DCR filter driers designed for three or four cores.

When inserting into or removing cores from a DCR filter housing with the new take-apart block holder, no more clearance space is needed than for a two-core block holder.

The take-apart block holder can also be used without taking it apart. Here the procedure is as with non-take-apart block holders.

Filter core type 48-DC:
Solid core with moisture and acid adsorption properties.

Filter core type 48-DM:
Solid core of 100% Molecular Sieve.
For HFC systems.

Filter core type 48-DA:
Solid core for acid adsorption after burnout.

Filter core type 48-F:
Strainer for retaining dirt in suction and liquid lines.

Features

48-DC
- Refrigerants: R22, R134a, R404A and R507. Compatible with blends containing R124, R125, R134a, R143a, R152a, R218, R23 and R32.
- High drying capacity throughout whole temperature range.
- Robust solid core withstands pressure surge and vibration.
- Optimized, uniform grain size in the solid core gives effective dirt removal and low pressure drop.
- Solid core consisting of
  - 3Å Molecular Sieve fully compatible with R134a and R404A.
  - Activated aluminum oxide for acid adsorption.

48-DM
- Refrigerants: R134a, R404a, R407C, etc.
- Solid core with 100% 3Å Molecular Sieve. Can be used with additives in polyolester oil.
- High water absorption.
- Effective protection against impurities.

48-DA for burnout filters
- Refrigerants: R22, R134a, R404A and R507.
- Solid core with high acid adsorption and standard water adsorption.
- Robust solid core withstands pressure surge and vibration.
- Protects the compressor against acid, moisture, dirt, and other harmful substances.
- Optimum flow gives low pressure drop across the filter.

48-F strainer
- Refrigerants: All fluorinated refrigerants.
- For use in suction or liquid lines.
- Retains dirt particles larger than 15 µm.
- For direct use in DCR filter housings.

C UL US listed, file SA 6398
CSA certificate, no. 51840
CE

Ordering

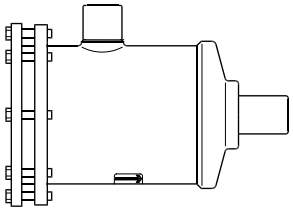

DCR Series-Filter drier shell without core

Extended copper ODF connections

Type	Conn. In.	Code no. Solder ODF	Suggested Tonnage R22	Weight (lb.)
DCR 0485s	5/8	**023U7250**	10	11.5
DCR 0487s	7/8	**023U7251**	15	11.5
DCR 0489s	1 1/8	**023U7253**	20	11.5
DCR 04811s	1 3/8	**023U7254**	20	11.5
DCR 04813s	1 5/8	**023U7255**	20	11.5
DCR 04817s	2 1/8	**023U7257**	25	11.5
DCR 04821s	2 5/8	**023U7276**	25	11.5
DCR 0967s	7/8	**023U7258**	25	14.6
DCR 0969s	1 1/8	**023U7260**	35	14.6
DCR 09611s	1 3/8	**023U7261**	35	14.6
DCR 09613s	1 5/8	**023U7262**	40	14.6
DCR 09617s	2 1/8	**023U7264**	45	14.6
DCR 1449s	1 1/8	**023U7265**	40	17.2
DCR 14411s	1 3/8	**023U7267**	50	17.2
DCR 14417s	2 1/8	**023U7270**	60	17.2
DCR 19213s	1 5/8	**023U7272**	80	20.1
DCR 19217s	2 1/8	**023U7274**	85	20.1

Solid Cores for DCR Series

Type	Description	Code no. w/ Gasket
48 DC	80% MS / 20% AA	**023U4381**
48 DM	100% MS	**023U1392**
48 DA	Burn out	**023U5381**
48 F	Particulate filter	**023U1921**

Danfoss cores are direct replacements for most manufacturers, drier shells.

© Danfoss Inc. 01-07 (USCO)

Introduction

Sight glasses are used to indicate:
1. The condition of the refrigerant in the plant liquid line.
2. The moisture content in the refrigerant.
3. The flow in the oil return line from the oil separator.

The SGI, SGN, SGR or SGRN can be used for CFC, HCFC and HFC refrigerants.

The SGI and SGN are fitted with an indicator which changes color to show the moisture content in the refrigerant.

The SGR is used to indicate the liquid level in a receiver or the oil level in a compressor crankcase.

The SGRN is a sight glass like SGR, but supplied with a moisture indicator.

The moisture indicators in the sight glasses are dirt repelling.

Features

Type SGI/SGN/SGRN
- For HCFC and CFC refrigerants
- Indicates too high water contents in the refrigeration system
- Indication of lack of subcooling
- Indication of refrigerant deficiency
- Flare or solder connection

SGI = CFC refrigerants
SGN = HFC, HCFC refrigerants

Ordering

Body Styles	Type	Version	Connection in.	Code no.	Length in.	Weight lbs.
	SGI 6 SGI 10 SGI 12 SGI 16	Flare ext. × ext.	$^1/_4 \times {}^1/_4$ $^3/_8 \times {}^3/_8$ $^1/_2 \times {}^1/_2$ $^5/_8 \times {}^5/_8$	**014-0060** **014-0061** **014-0009** **014-0024**	2.65 3.25 3.50 4.10	0.25 0.50 0.75 1.00
	SGI 6 SGI 10 SGI 12	Flare int. × ext. [1]	$^1/_4 \times {}^1/_4$ $^3/_8 \times {}^3/_8$ $^1/_2 \times {}^1/_2$	**014-0063** **014-0064** **014-0065**	1.80 2.25 2.33	0.25 0.50 0.75
	SGI 6s SGI 10s SGI 12s SGI 16s SGI 22s	ODF × ODF solder	$^1/_4 \times {}^1/_4$ $^3/_8 \times {}^3/_8$ $^1/_2 \times {}^1/_2$ $^5/_8 \times {}^5/_8$ $^7/_8 \times {}^7/_8$	**014-0066** **014-0067** **014-0068** **014-0069** **014-0070**	4.00 4.70 5.75 5.75 6.82	0.25 0.25 0.50 0.50 0.50
	SGI 10s	ODF × ODM solder	$^3/_8 \times {}^3/_8$	**014-0119**	4.00 4.70	0.25 0.25
	SGR $^1/_2$	NPT	$^1/_2$ NPT	**014-0131**		

1) Can be screwed directly into the filter drier.
2) ISO 228/1.

Body Styles	Type	Version	Connection in.	Code no.	Length in.	Weight lbs.
	SGN 6 SGN 10	Flare ext. × ext.	$^1/_4 \times {}^1/_4$ $^3/_8 \times {}^3/_8$ $^1/_2 \times {}^1/_2$	**014-0132** **014-0133**	2.65 3.25	0.25 0.50
	SGN 6 SGN 10 SGN 12	Flare int. × ext. [1]	$^1/_4 \times {}^1/_4$ $^3/_8 \times {}^3/_8$ $^1/_2 \times {}^1/_2$	**014-0137** **014-0138** **014-0139**	1.80 2.25 2.33 2.80 3.00	0.25 0.50 0.75 1.00 1.33
	SGN 6s SGN 10s SGN 12s SGN 16s SGN 22s	ODF × ODF solder	$^1/_4 \times {}^1/_4$ $^3/_8 \times {}^3/_8$ $^1/_2 \times {}^1/_2$ $^5/_8 \times {}^5/_8$ $^7/_8 \times {}^7/_8$	**014-0142** **014-0143** **014-0144** **014-0145** **014-0147**	4.00 4.70 5.75 6.82	0.25 0.25 0.50 0.50
	SGN 10s SGN 16s	ODF × ODM solder	$^3/_8 \times {}^3/_8$ $^5/_8 \times {}^5/_8$ $^7/_8 \times {}^7/_8$	**014-0152** **014-0154**	4.00 4.70 5.75 5.75	0.25 0.25 0.50 0.50
	SGRN	NPT	$^1/_2$ NPT	**014-0006**		

1) Can be screwed directly into the filter drier.

R410A

Body Styles	Type	Version	Connection in.	Code no.
	SGH 6	Flare ext. × ext.	$^1/_4 \times {}^1/_4$	014-1660
	SGH 6s SGH 10s SGH 12s SGH 16s SGH 22s SGH 22s	ODF × ODF solder	$^1/_4 \times {}^1/_4$ $^3/_8 \times {}^3/_8$ $^1/_2 \times {}^1/_2$ $^5/_8 \times {}^5/_8$ $^7/_8 \times {}^7/_8$ $1^1/_8 \times 1^1/_8$	014-1090 014-1092 014-1091 014-1094 014-1096 014-1098

1) Can be screwed directly into the filter drier.

© Danfoss Inc. 01-07 (USCO)

Refrigerant	SGI						SGN					
	77°F			110°F			77°F			110°F		
	Green dry	Intermed. color	Yellow wet	Green dry	Intermed. color	Yellow wet	Green dry	Intermed. color	Yellow wet	Green dry	Intermed. color	Yellow wet
CFC	**SGI recommended											
R12	< 10	10 - 25	> 25	< 35	35 - 65	> 65						
R502	< 70	70 - 140	> 140	< 110	110 - 230	> 230	< 10	10 - 50	> 50	< 20	20 - 90	> 90
HCFC							**SGN recommended					
R22	< 150	150 - 300	> 300	< 250	250 - 500	> 500	< 30	30 - 120	> 120	< 50	50 - 200	> 200
R134a	< 130	130 - 270	> 270	< 210	210 - 430	> 430	< 30	30 - 100	> 100	< 45	45 - 170	> 170
R404A	< 90	90 - 170	> 170	< 125	125 - 250	> 250	< 20	20 - 70	> 70	< 25	25 - 100	> 100
R407C	< 170	170 - 350	> 350	< 280	280 - 560	> 560	< 30	30 - 140	> 140	< 60	60 - 225	> 225
R507	< 80	80 - 160	> 160	< 140	140 - 280	> 280	< 15	15 - 60	> 60	< 30	30 - 110	> 110

This chart indicates the moisture content in parts per million for both types of Danfoss sight glasses for the given refrigerants.

Introduction

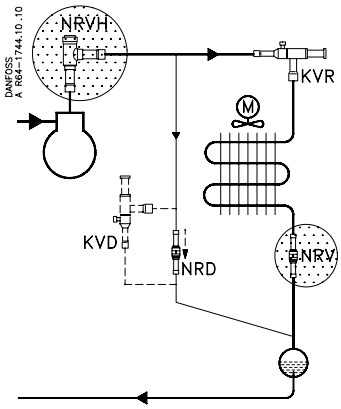

NRV check valves can be used in liquid, suction, and hot gas lines in refrigeration and air conditioning systems using fluorinated refrigerants. They allow flow in only one direction and have a built-in damping piston that makes the valve suitable for installation in lines where pulsation can occur. They are available in both angleway and straightway versions.

NRVH check valves can be used in liquid and hot gas lines in refrigeration and air conditioning systems using fluorinated refrigerants. They are supplied with a stronger spring than type NRV (ΔP = 4.3 psi) and are especially suitable for installation in the discharge line of systems with compressors connected in parallel.

Features

Two Versions available
- Type NRV: Requires a minimum Δp of 0.6 to 1 psi for 100% flow.
- Type NRVH: Includes a stronger spring that requires a minimum Δp of 4.3 psi for 100% flow.

Both straightway and angleway versions

Prevents refrigerant migration from a warm evaporator to a cold evaporator

Built-in damping piston

Suitable for installation in lines where pulsation can occur, e.g. in the discharge line from the compressor.

Oversize connections provide flexibility in use.

Refrigerants:
- CFC, HCFC and HFC

Temperature of medium:
- −60 → +285°F

Maximum working pressure:
- MWP = 400 psig

Maximum test pressure:
- p' = 520 psig

© Danfoss Inc. 01-07 (USCO)

Ordering

NRV straightway, flare connection

Body Style	Type	Connection in.	Pressure drop [2] across valve Δp psi	C_v value [3] gal/min	Code no.	Overall Length in.	Weight lbs.
	NRV 6	1/4	1.0	0.65	**020-1040**	2.21	0.2
	NRV 10	3/8	1.0	1.65	**020-1041**	2.36	0.4
	NRV 12	1/2	0.7	2.37	**020-1042**	2.72	0.4
	NRV 16	5/8	0.7	4.16	**020-1043**	3.15	0.7
	NRV 19	3/4	0.7	5.78	**020-1044**	3.47	0.9

NRV / NRVH straightway, solder connection

Body Style	Type	Connection in.	Pressure drop [2] across valve Δp psi	C_v value [3] gal/min	Code no.	Overall Length in.	Weight lbs.
	NRV 6s	1/4	1.0	0.65	**020-1010**	3.62	0.2
	NRV 6s[1]	3/8	1.0	0.65	**020-1057**	3.62	0.4
	NRVH 6s[1]	3/8	1.0	0.65	**020-1069**	3.62	0.4
	NRV 10s	3/8	1.0	1.65	**020-1011**	4.29	0.4
	NRVH 10s	3/8	4.3	1.65	**020-1046**	4.29	0.4
	NRV 10s[1]	1/2	1.0	1.65	**020-1058**	4.29	0.4
	NRVH 10s[1]	1/2	4.3	1.65	**020-1070**	4.29	0.4
	NRV 12s	1/2	0.7	2.37	**020-1012**	5.16	0.4
	NRVH 12s	1/2	4.3	2.37	**020-1039**	5.16	0.4
	NRV 12s[1]	5/8	0.7	2.37	**020-1052**	5.16	0.4
	NRVH 12s[1]	5/8	4.3	2.37	**020-1064**	5.16	0.4
	NRV 16s	5/8	0.7	4.16	**020-1018**	5.43	0.7
	NRVH 16s	5/8	4.3	4.16	**020-1038**	5.43	0.7
	NRV 16s[1]	3/4	0.7	4.16	**020-1059**	5.43	0.7
	NRVH 16s[1]	3/4	4.3	4.16	**020-1071**	5.43	0.7
	NRV 19s	3/4	0.7	5.78	**020-1019**	6.50	0.9
	NRVH 19s	3/4	4.3	5.78	**020-1023**	6.50	0.9
	NRV 19s[1]	7/8	0.7	5.78	**020-1054**	6.50	0.9
	NRVH 19s[1]	7/8	4.3	5.78	**020-1066**	6.50	0.9

NRV / NRVH angleway, solder connection

Body Style	Type	Connection in.	Pressure drop [2] across valve Δp psi	C_v value [3] gal/min	Code no.	Weight lbs.
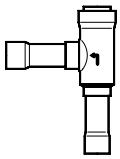	NRV 22s	7/8	0.6	9.83	**020-1020**	1.1
	NRVH 22s	7/8	4.3	9.83	**020-1032**	1.1
	NRV 22s[1]	1 1/8	0.6	9.83	**020-1060**	1.1
	NRVH 22s[1]	1 1/8	4.3	9.83	**020-1072**	1.1
	NRV 28s	1 1/8	0.6	21.96	**020-1021**	2.4
	NRVH 28s	1 1/8	4.3	21.96	**020-1029**	2.4
	NRV 28s[1]	1 3/8	0.6	21.96	**020-1056**	2.4
	NRVH 28s[1]	1 3/8	4.3	21.96	**020-1068**	2.4
	NRV 35s	1 3/8	0.6	33.52	**020-1026**	2.4
	NRVH 35s	1 3/8	4.3	33.52	**020-1034**	2.4
	NRV 35s[1]	1 5/8	0.6	33.52	**020-1061**	2.4
	NRVH 35s[1]	1 5/8	4.3	33.52	**020-1073**	2.4

1) Oversize connections
2) Δp = the minimum pressure at which the valve is completely open.
The NRVH with a stronger spring is used in the discharge line from compressors connected in parallel.
3) C_v value is the water flow in gal/min at a pressure drop across valve of 1 psi, ρ = 10 lbs/gal.

Metric conversions
1 psi = 0.07 bar
1 in. = 25.4 mm
US gal/min = 0.86 m^3/h

Introduction

The oil separator type OUB is for use in all refrigeration plants where the compressor lubricating oil must be returned direct to the compressor oil sump under all operating conditions.

In this way lubricating oil from the compressor is prevented from circulating with the refrigerant in the refrigeration system itself.

Features

Ensures oil return to compressor oil sump.
- Prevents compressor breakdown caused by lack of lubrication.
- Increases compressor operating life.

High efficiency caused by interaction of reduced flow velocity change of flow direction for oil concentration, oil separation collection of separated oil at high temperature, and automatic oil return to crankcase.

Protects against liquid hammer in compressor.

Better utilization of condenser and evaporator capacity (no oil-gas collection).

Pulsation and noise damping on high-pressure side of system.

US listed, file 3736

certified, LR51840

Refrigerants:
- CFC, HCFC, HFC

Max. working pressure:
- PS = 400 PSI

Max. test pressure:
- p' = 500 PSI

Temperature of medium:
- –40 to 478°F

Net volume:
- OUB 1: 1 qt
- OUB 4: 5 qt

Oil reservoir:
- OUB 1: .10 qt
- OUB 4: .5 qt

© Danfoss Inc. 01-07 (USCO)

Ordering

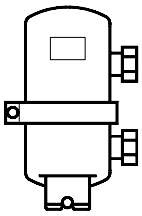

OUB 1 / OUB 4

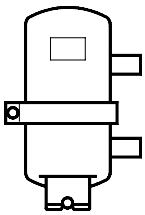

OUB 1s

Oil Separators, Type OUB

Code no.	Body Style							
040B0010	Oil Separator Body style OUB 1 body only * below connectors required							
Connection Fittings						*2 required		
Code no.	Connection		Rated plant capacity (TR)					Weight
	size	type	R22	R134a	R404A	R507	R407C	lbs. **
040B0023	1/4"	Flare	0.90	0.75	1.00	1.00	1.25	3.5
040B0029	6mm	Solder	0.90	0.75	1.00	1.00	1.25	3.5
040B0132	3/8"	Flare	0.90	0.75	1.00	1.00	1.25	3.5
040B0140	3/8"	Solder	0.90	0.75	1.00	1.00	1.25	3.5
040B0134	1/2"	Flare	0.90	0.75	1.00	1.00	1.25	3.5
040B0142	1/2"	Solder	0.90	0.75	1.00	1.00	1.25	3.5
040B0136	5/8"	Flare	0.90	0.75	1.00	1.00	1.25	3.5
040B0144	5/8"	Solder	0.90	0.75	1.00	1.00	1.25	3.5
Code no.	Body Style							
040B0040	Oil Separator Body style OUB 4 body only * below connectors required							
Connection Fittings						*2 required		
Code no.	Connection		Rated plant capacity (TR)					Weight
	size	type	R22	R134a	R404A	R507	R407C	lbs. **
040B0256	5/8"	Flare	3.30	5.58	3.60	3.60	4.55	10
040B0266	5/8"	Solder	3.30	5.58	3.60	3.60	4.55	10
040B0258	3/4"	Flare	3.30	5.58	3.60	3.60	4.55	10
040B0268	3/4"	Solder	3.30	5.58	3.60	3.60	4.55	10
040B0270	7/8"	Solder	3.30	5.58	3.60	3.60	4.55	10
040B0260	1"	Flare	3.30	5.58	3.60	3.60	4.55	10
040B0272	1"	Solder	3.30	5.58	3.60	3.60	4.55	10
040B0274	1 1/8"	Solder	3.30	5.58	3.60	3.60	4.55	10

** Weight is Oil Separator and connectors combined

OUB Body is sold separately if desired complete 2 connection fittings are required along with oil separator being ordered.

Dimensions and weights

Type	Flare connection	Weight
	in.	lbs.
OUB 1	3/8	2.65
	1/2	2.87
	5/8	3.10
OUB 4	5/8	10.15
	3/4	10.40
	1	10.60

Type	Solder connection	Weight
	in.	lbs.
OUB 1	3/8	2.65
	1/2	2.65
	5/8	2.87
OUB 1s		2.65
		2.65
OUB 4	5/8	9.50
	3/4	9.50
	7/8	9.50
	1	9.50
	1 1/8	9.50

Introduction

Pressure-controlled water valves types WVFM and WVFX are used for regulating the flow of water in refrigeration plants with water-cooled condensers.

The water valves give modulating regulation of the condensing pressure and so maintain it constant (practically speaking) during operation. When the refrigeration plant is stopped, the cooling water flow is shut off automatically.

Ordering

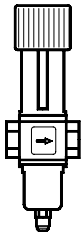

Type	Code no.		Connection		Range (psi)	Cv (GPM)
	Flare	36″ Cap Tube	Water side	Condenser side		
WVFX 10	**003N5006**	**003N5005**	$^3/_8$ NPT	$^1/_4$″ flare	60-338	1.7
WVFX 15	**003N6006**	**003N6005**	$^1/_2$ NPT	$^1/_4$″ flare	60-338	2.2
WVFX 20	**003N7006**	**003N7005**	$^3/_4$ NPT	$^1/_4$″ flare	60-338	4.0
WVFX 25	**003N8006**	**003N8005**	1 NPT	$^1/_4$″ flare	60-338	6.4

Media Temperature Range: –15°F to 260°F
Max Water Pressure: 235 psig
Max Water Test Pressure: 367 psig
Max Water Pressure Differential: 150 psig
Bellows Material: Stainless Steel
For R 22, R 134a, R 404A, R 12, R 502

© Danfoss Inc. 01-07 (USCO)

Introduction

The BM is a manual shut-off valve designed for installation in the liquid, suction and hot gas lines of refrigeration plant.

Features

Can be used for all fluorinated refrigerants.

Fitted with three stainless steel diaphragms that prevent leakage throughout the operating life of the valve.

Valve plate of polyamide nylon to give complete shut-off with minimum torque.

Valve cover with counter-seat to prevent the ingress of moisture.

Technical data

Temperature range
–67° → + 212°F

Working range
14.5 → + 304.5° psi

Max. working pressure
406 psi

Max. test pressure
446.7 psi

Ordering

BM with hand wheel						
Version	Type	Connection	Code no.			C_V Value gal/min
			Flare	ODF solder	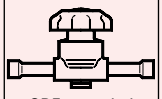 ODF extended ends	
Straightway	BML 6	1/4 in.	**009G0101**	**009G0102**	**009G0202**	1.32
	BML 10	3/8 in.	**009G0127**	**009G0122**	**009G0222**	3.7
	BML 12	1/2 in.	**009G0141**	**009G0142**	**009G0242**	6.6
	BML 15	5/8 in.	**009G0168**	**009G0162**	**009G0262**	9.69
	BML 18	3/4 in.		**009G0181**		12.77
	BML 22	7/8 in.		**009G0191**	**009G0291**	12.77
Three-way	BMT 6	1/4 in.	**009G0105**			1.32

© Danfoss Inc. 01-07 (USCO)

Design / Function

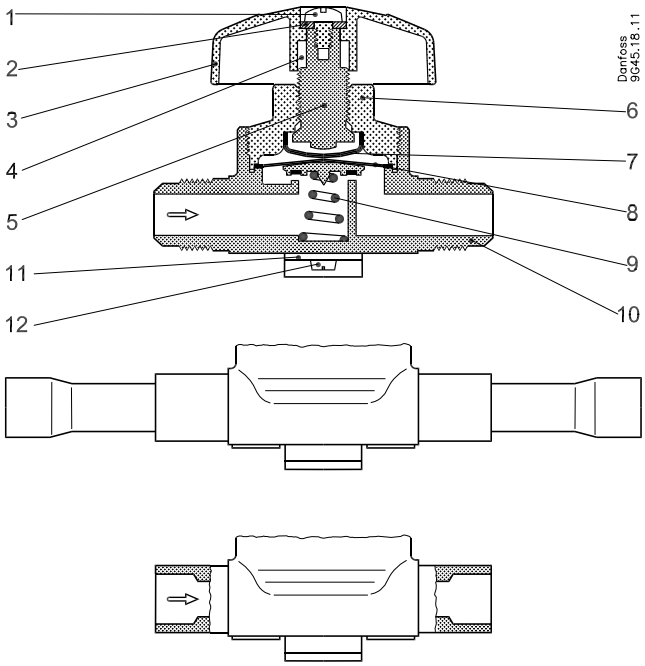

1. Screw
2. Washer
3. Handwheel
4. Driver
5. Spindle
6. Cover
7. Thrust pad
8. Diaphragm with valve plate
9. Spring
10. Valve body
11. Bracket
12. Screw

The shut-off valves are fitted with three diaphragms all of stainless steel which ensure long operating life.

BM valves are available in straightway, and three-way versions.

The three-way version side connection can be shut off, but the end connections will always remain open. The BM can be fitted with a mounting bracket. Valve body, cover and spindle are made of brass, the handwheel (3) of coloured plastic. BM valves have a triple diaphragm seal (8) which is designed in such a way that the tension in the diaphragms lift the valve plate from the seat when the valve is opened.

The valve plate itself is made of nylon and gives complete shut-off when the handwheel is lightly tightened.

The thrust pad (7) prevents direct contact between spindle (5) and diaphragms (8). This also contributes to increased valve life.

The spring (9) is able to hold the valve open at operating pressures down to –1 bar (pe).

The counter-seat in the cover (6) prevents the ingress of moisture in fully open position.

When the valve is opened, the pressure on the outlet side must not exceed the pressure on the inlet side by more than 1 bar.

		BM 6	BM 10	BM 12	BM 16	BM 18/20
Description	Qty.	**Code no.**	**Code no.**	**Code no.**	**Code no.**	**Code no.**
Service Kit Pos. 1 Diaphragm assembly 2 Diaphragm	7 8	**009G0025**	**009G0026**	**009G0027**	**009G0028**	**009G0029**

© Danfoss Inc. 01-07 (USCO)

Dimensions and weights

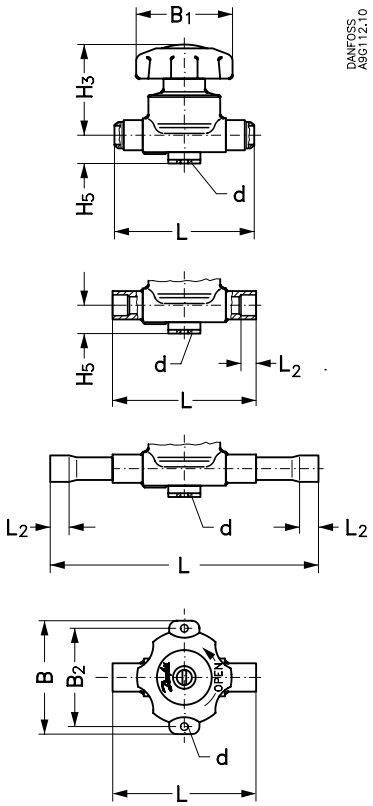

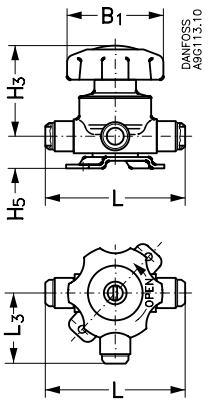

Version	Type	H_3 inches	H_4 inches	H_5 inches	L inches	L_2 inches	B inches	B_1 inches	B_2 inches	Ø d inches	Weight lbs.
Flare	BM 6	1.8	2	19	3		2.5	1.95	1.95	.20	.66
	BM 10	1.9	2.1	.62	3.3		2.5	1.95	1.95	.20	.88
	BM 12	2.2	2.4	.70	4		2.75	2.3	2.2	.24	1.1
	BM 15	2.6	2.8	.86	4.65		3.25	2.8	2.7	.24	1.5
	BMT 6	1.8		.75	3		2.5	1.95	1.45	.20	.66
ODF solder	BM 6	1.8		.66	2.6	.27	2.5	1.95	1.95	.20	.66
	BM 10	1.9		.62	2.85	.35	2.5	1.95	1.95	.20	.88
	BM 12	2.2		.70	3.4	.39	2.75	2.3	2.2	.24	1.1
	BM 15	2.6		.78	4.2	.47	3.25	2.8	2.7	.24	1.5
	BM 18-22	2.7		.86	4.1	.66	3.25	2.8	2.7	.24	1.75
ODF solder extended ends	BM 6	1.8	2	.75	4.6	.27	2.5	1.95	1.95	.20	.66
	BM 10	1.9	2.1	.62	4.6	.35	2.5	1.95	1.95	.20	.88
	BM 12	2.2	2.4	.70	5	.39	2.75	2.3	2.2	.24	1.1
	BM 15	2.6	2.3	.78	6.5	.47	3.25	2.8	2.7	.24	1.5
	BM 18-22	2.7	2.85	.86	7.1	.66	3.25	2.8	2.7	.24	1.75

Introduction

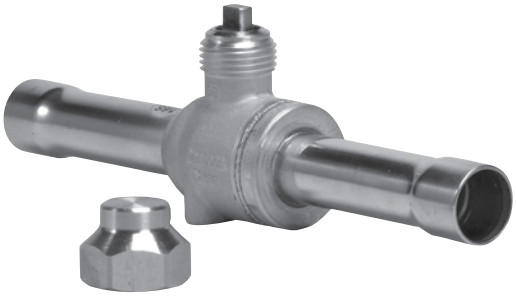

Danfoss ball valves, type GBC, are manually operated shut-off valves suitable for applications where bi-directional flow is a requirement.

GBC valves are approved for applications in liquid, suction, and hot gas lines in refrigeration and air- conditioning systems.

GBC valves offer maximum tightness across the seat and seal, with minimum pressure drop.

These ball valves give maximum flow in the fully open position. They are designed for operation within a broad temperature range and are approved for use with any fluorinated refrigerant. They may be used in applications using high pressure refrigerants including R-410A.

GBC valves are equipped with a one-piece seal cap to prevent tampering.

Features

Slimline body – easier to install and service.

¼ turn from fully open to fully closed.

Rotation stops at fully open and fully closed positions.

Indicator on spindle top shows degree of opening.

Bi-flow – valve orientation is not an issue.

Precision laser welded construction.

Burst-proof spindle design.

Valve seal of low friction, tight-sealing modified PTFE Teflon®.

Drilled and tapped for panel mounting.

Technical data

Refrigerants	CFC, HCFC, HFC
Temperature range	–40 → +300°F (–40 → +150°C)
Max. working pressure (PS/MWP)	653 psig (45 bar)
Max. test pressure	943 psig (65 bar)
Approvals	c UL us CE

*Safety and environmental requirements

© Danfoss Inc. 01-07 (USCO)

Ordering

The product range consists of two valve types: one with and one without access port. Both versions can be supplied in inch or millimeter sizes from 1/4 in. to 31/8 in. (6 mm to 54 mm). All valves have holes for panel mounting.

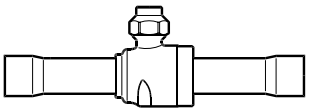

GBC without access port

GBC without access port			
Type	Solder ODF connection [in.]	Code no.	C_v value *) [gal/min]
GBC 6s	1/4	**009G7020**	9
GBC 10s	3/8	**009G7021**	25
GBC 12s	1/2	**009G7022**	47
GBC 16s	5/8	**009G7023**	62
GBC 18s	3/4	**009G7024**	90
GBC 22s	7/8	**009G7025**	124
GBC 28s	1 1/8	**009G7026**	229
GBC 35s	1 3/8	**009G7027**	356
GBC 42s	1 5/8	**009G7028**	533
GBC 54s	2 1/8	**009G7029**	990
Restricted flow			
GBC 67s	2 5/8	**009G7036**	1082
GBC 79s	3 1/8	**009G7037**	980

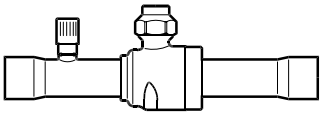

GBC with access port

GBC without access port			
Type	Solder ODF connection [in.]	Code no.	C_v value *) [gal/min]
GBC 6s	1/4	**009G7050**	9
GBC 10s	3/8	**009G7051**	25
GBC 12s	1/2	**009G7052**	47
GBC 16s	5/8	**009G7053**	62
GBC 18s	3/4	**009G7054**	90
GBC 22s	7/8	**009G7055**	124
GBC 28s	1 1/8	**009G7056**	229
GBC 35s	1 3/8	**009G7057**	356
GBC 42s	1 5/8	**009G7058**	533
GBC 54s	2 1/8	**009G7059**	990
Restricted flow			
GBC 67s	2 5/8	**009G7066**	1082
GBC 79s	3 1/8	**009G7067**	980

*) CFD calculated values (Computational Fluid Dynamics)

Dimensions and weights

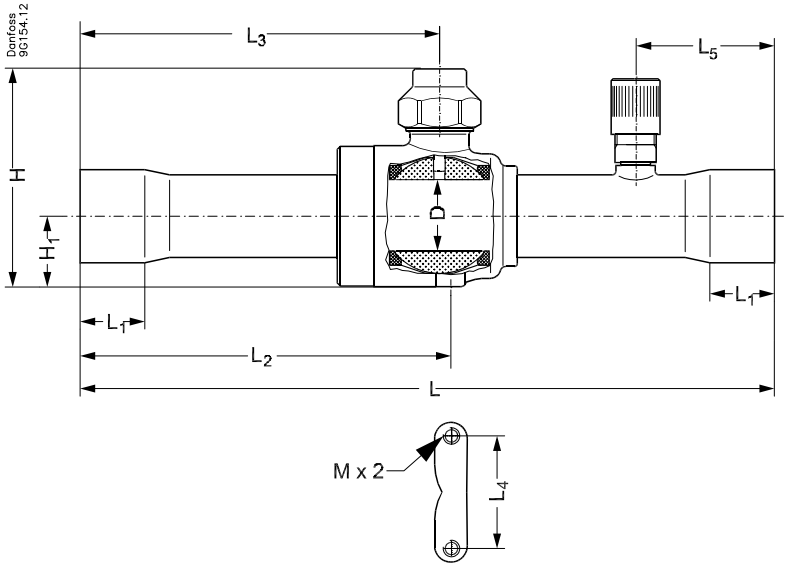

Type	Conn [in.]	H [in.]	H1 [in.]	L [in.]	L1 [in.]	L2 [in.]	L3 [in.]	L4 [in.]	L5 [in.]	M [in.]	D [in.]	d [in.]	Weight (lbs)
GBC-6S	1/4″	1.96	0.59	5.43	0.27	2.91	2.83	0.87	1.22	M4 x 0.027	0.55	0.06	0.44
GBC-10S	3/8″	1.96	0.59	5.43	0.31	2.91	2.83	0.87	1.22	M4 x 0.027	0.55	0.06	0.44
GBC-12S	1/2″	1.96	0.59	6.30	0.39	3.35	3.27	0.87	1.22	M4 x 0.027	0.55	0.06	0.44
GBC-16S	5/8″	1.96	0.59	6.30	0.47	3.35	3.27	0.87	1.22	M4 x 0.027	0.55	0.06	0.44
GBC-18S	3/4″	2.44	0.75	7.28	0.55	3.90	3.78	1.18	1.46	M4 x 0.027	0.75	0.06	0.88
GBC-22S	7/8″	2.44	0.75	7.28	0.70	3.90	3.78	1.18	1.46	M4 x 0.027	0.75	0.06	0.88
GBC-28S	11/8″	2.95	0.98	8.19	0.79	4.41	4.25	1.50	1.73	M4 x 0.027	1.00	0.06	1.98
GBC-35S	13/8″	3.46	1.18	9.88	0.98	5.35	5.12	1.89	1.73	M4 x 0.39	1.26	0.06	3.09
GBC-42S	15/8″	4.01	1.38	11.06	1.14	5.94	5.71	2.17	2.20	M4 x 0.39	1.50	0.06	4.85
GBC-54S	21/8″	4.84	1.81	12.00	1.34	6.67	6.18	2.91	2.20	M4 x 0.39	1.97	0.06	9.26
GBC-67S	25/8″	4.84	1.81	12.00	1.46	6.67	6.18	2.91	2.20	M4 x 0.39	1.97	0.06	9.70
GBC-79S	31/8″	4.84	1.81	12.00	1.65	6.67	6.18	2.91	2.20	M4 x 0.39	1.97	0.06	9.92

© Danfoss Inc. 01-07 (USCO)

Introduction

Danfoss fractional HP compressors provide superior performance and efficient operation under extreme conditions. They provide lasting performance thanks to minimum energy consumption and provide quiet operation. Danfoss offers a wide range of fractional horsepower refrigeration compressors for a variety of temperatures, refrigerants and voltage applications.

Features

Capacities 0.03 to 1.3 HP

High efficiency series for refrigerators and freezers

Light commercial line for bottle coolers and vending machines, etc.

Models for cooling electronic and scientific equipment

DC units for portable coolers, trucks, boats, etc.

Refrigerants: R134a, R404A

115V & 230V AC and 12 & 24 Volt DC applications

Internal or external overload protection

Ordering

R134a LBP - MBP Applications 115 V / 60 Hz

Model	BTUH*			NOM HP	Start Torque	Code no.
	–10°F	+20°F	+45F			
PL30F	103	269	518	0.03	LST	**101G9100LS**
					HST	**101G9100HS**
PL50F	175	389	NA	0.04	LST	**101G9202LS**
					HST	**101G9202HS**
TT2.5F	202	468	NA	0.05	LST	**102G3248LS**
TL2.5F	202	468	NA	0.05	LST	**102G3206LS**
TF3F	239	568	NA	0.06	LST	**102G3303LS**
TL3F	253	568	NA	0.06	LST	**102G3300LS**
TF3.5F	304	NA	NA	0.08	LST	**102G3304LS**
TL4F	310	716	NA	0.08	LST	**102G3400LS**
TFS4F	356	NA	NA	0.09	LST	**102G3434LS**
TLS4.5F	477	1135	NA	0.12	LST	**102G3421LS**
					HST	**102G3421HS**
TFS4.5FT	477	1135	NA	0.12	LST	**102G3439LS**
TFS4.5FT	477	1135	1768	0.12	LST	**102G3452LS**
					HST	**102G3452HS**
NF6FK	668	1389	2459	0.17	LST	**105G5628LS**
					HST	**105G5628HS**
NF5.5FX	696	1447	2561	0.17	HST	**105G5623HS**

*Rating conditions at ASHRAE rating point.

Standard Delivery Includes:
Start components, either HST or LST as specified, mounting parts set (bolt type, 16mm grommets), terminal cover & strain relief where appropriate.

Ordering *(continued)*

R134a LBP - MBP Applications 115 V / 60 Hz						
Model	BTUH*			NOM HP	Start Torque	Code no.
	–10°F	+20°F	+45F			
NF6.1FX.2	721	1546	2723	0.18	HST	**105G5631HS**
NF7FK	833	1657	2915	0.2	LST	**105G5728LS**
					HST	**105G5728HS**
NF7FX	859	1708	3006	0.2	HST	**105G5723HS**
NF7.3FX.2	892	1683	3254	0.2	HST	**105G5722HS**
NF9FK	923	1853	3270	0.2	LST	**105G5928LS**
					HST	**105G5928HS**
NF9FX	936	1913	3383	0.2	HST	**105G5920HS**
NF9.5FK	1024	2046	3590	0.3	LST	**105G5929LS**
					HST	**105G5929HS**
NF8.4FX.2	1030	2113	3668	0.3	HST	**105G5918HS**
NF10FX	1047	2130	3767	0.3	HST	**105G5941HS**
NF11FX	1099	2278	4055	0.3	HST	**105G5945HS**
NF11FX.2	NA	2704	4713	0.3	HST	**105G5916HS**
SC12FTX	1280	2678	NA	0.3	HST	**104G7205HS**
SC15FTX	1550	3145	NA	0.4	HST	**104G7505HS**

R134a LBP - MBP - HBP Applications 115 V / 60 Hz						
Model	BTUH*			NOM HP	Start Torque	Code no.
	–10°F	+20°F	+45F			
TL2.5G	190	495	970	0.06	LST	**102G3257LS**
TL4G	305	732	1374	0.09	LST	**102G3462LS**
					HST	**102G3462HS**
FF6GK	414	1189	2305	0.15	LST	**103G5680LS**
FF7.5GK	515	1350	2540	0.17	LST	**103G5780LS**
FF8.5GX	661	1577	2854	0.2	HST	**103G5880HS**
FF10GX	715	1729	3159	0.2	HST	**103G5980HS**
SC12G	1006	2536	4765	0.3	HST	**104G7250HS**
SC15G	1031	3040	5543	0.4	HST	**104G7550HS**
SC18G	1355	3479	6216	0.4	HST	**104G7800HS**

*Rating conditions at ASHRAE rating point.

Standard Delivery Includes:
Start components, either HST or LST as specified, mounting parts set (bolt type, 16mm grommets), terminal cover & strain relief where appropriate.

© Danfoss Inc. 01-07 (USCO)

Ordering *(continued)*

R134a LBP Applications 220 V / 50 - 60 Hz							
Model	BTUH*			NOM HP	Start Torque	**Code no.**	Remark
	–10°F	+20°F	+45F				
SC12FT	1275	2667	NA	0.3	LST	**104G8205LS**	
					HST	**104G8205HS**	
	1275	2667	NA	0.3	LST	**104G8215LS**	w oil cooling
					HST	**104G8215HS**	w oil cooling
SC15FT	1541	3170	NA	0.4	LST	**104G8505LS**	
					HST	**104G8505HS**	
SC18FTX	1821	3756	NA	0.5	HST	**104G8805HS**	
SC21FTX	2182	4415	NA	0.5	HST	**104G8106HS**	

R134a LBP Applications 220 V / 60 Hz - LBP / MBP / HBP Applications 220 V / 50 Hz							
Model	BTUH*			NOM HP	Start Torque	**Code no.**	Remark
	–10°F	+20°F	+45F				
TL2.5G	202	468	858	0.05	LST	**102G4250LS**	
					HST	**102G4250HS**	
TL3G	230	559	NA	0.06	LST	**102G4352LS**	
					HST	**102G4352HS**	
TL4G	329	733	NA	0.08	LST HST	**102G4458LS**	
						102G4458HS	
TL5G	429	907	NA	0.11	LST	**102G4550LS**	
					HST	**102G4550HS**	
FR6G	458	1193	NA	0.11	LST	**103G6660LS**	
					HST	**103G6660HS**	
FR7.5G	547	1334	NA	0.14	LST	**103G6680LS**	
					HST	**103G6680HS**	
					LST	**103G6690LS**	w oil cooling
					HST	**103G6690HS**	w oil cooling
FR8.5G	660	1532	NA	0.17	LST	**103G6780LS**	
					HST	**103G6780HS**	
					LST	**103G6790LS**	w oil cooling
					HST	**103G6790HS**	w oil cooling
FR10G	731	1688	NA	0.18	LST	**103G6880LS**	
					HST	**103G6880HS**	
					LST	**103G6890LS**	w oil cooling
					HST	**103G6890HS**	w oil cooling
SC10G	669	1962	NA	0.17	LST	**104G8000LS**	
					HST	**104G8000 HS**	
SC12G	982	2439	NA	0.2	LST	**104G8243LS**	
					HST	**104G8243HS**	
					LST	**104G8250LS**	w oil cooling
					HST	**104G8250HS**	w oil cooling

*Rating conditions at ASHRAE rating point.

Standard Delivery Includes:
Start components, either HST or LST as specified, mounting parts set (bolt type, 16mm grommets), terminal cover & strain relief where appropriate.

Ordering *(continued)*

R134a LBP Applications 220 V / 60 Hz - LBP / MBP / HBP Applications 220 V / 50 Hz

Model	BTUH*			NOM HP	Start Torque	Code no.	Remark
	–10°F	+20°F	+45F				
SC15G	1262	3005	NA	0.3	HST	**104G8525HS**	w oil cooling
					HST	**104G8530HS**	
SC18G	1558	3532	NA	0.4	HST	**104G8822HS**	
					HST	**104G8830HS**	w oil cooling
SC21G	1833	4132	NA	0.5	HST	**104G8124HS**	

R134a LBP / MBP Applications 220 V / 60 Hz

Model	BTUH*			NOM HP	Start Torque	Code no.	Remark
	–10°F	+20°F	+45F				
NF7FX	743	1711	3036	0.2	HST	**105G6743HS**	
NF10FX	1068	2209	3937	0.3	HST	**105G6846HS**	
SC12G	NA	2439	4830	0.3	HST	**104G8245HS**	
SC15G	NA	3005	5315	0.4	HST	**104G8526HS**	
SC18G	NA	3532	6242	0.4	HST	**104G8823HS**	

R134a MBP Applications 220 V / 50 - 60 Hz

Model	BTUH*			NOM HP	Start Torque	Code no.	Remark
	–10°F	+20°F	+45F				
NL6.1MF	561	1302	2401	0.16	LST	**105G6660LS**	
					HST	**105G6660HS**	
NL7.3MF	750	1601	2880	0.2	LST	**105G6773LS**	
					HST	**105G6773HS**	
NL8.4MF	843	1858	3370	0.2	LST	**105G6879LS**	
					HST	**105G6879HS**	
NL10MF	1089	2272	4064	0.3	LST	**105G6887LS**	w oil cooling
					HST	**105G6887HS**	w oil cooling
					LST	**105G6886LS**	
					HST	**105G6886HS**	

R134a HBP Applications 220 V / 50-60 Hz

Model	BTUH*			NOM HP	Start Torque	Code no.	Remark
	–10°F	+20°F	+45F				
TL4GH	NA	725	1360	0.09	HST	**102G4455HS**	
FR7GH	NA	1313	2521	0.16	HST	**103G6683HS**	
						103G6692HS	w oil cooling
SC10GH	NA	1889	3522	0.3	HST	**104G8041HS**	
SC12GH	NA	2338	4651	0.4	HST	**104G8261HS**	
SC15GH	NA	2660	5415	0.5	HST	**104G8561HS**	
SC18GH	NA	3320	6242	0.5	HST	**104G8861HS**	

*Rating conditions at ASHRAE rating point.

Standard Delivery Includes:
Start components, either HST or LST as specified, mounting parts set (bolt type, 16mm grommets), terminal cover & strain relief where appropriate.

© Danfoss Inc. 01-07 (USCO)

Ordering *(continued)*

R134a LBP - MBP Applications 12-24V DC							
Model	BTUH*			NOM HP	Start Torque	**Code no.**	Remark
	–10°F	+20°F	+45F				
BD35F	155	366	NA	0.05	HST	**101Z0210**	inch dimension connectors
BD50F	211	471	NA	0.06	HST	**101Z0203**	inch dimension connectors
BD80F	277	585	NA	0.07	HST	**101Z0280**	metric dimension connectors

Electronic Units for BD Compressors		
Model	**Code no.**	Remark
For BD35F and BD50F	**101N0210**	incl. speed setting, battery protection
For BD35F and BD50F	**101N0220**	radiation extra shielded, incl. speed setting, battery protection
For BD35F and BD50F	**101N0500**	AC/DC Electronic Unit

R404A LBP Applications 115 V / 60 Hz							
Model	BTUH*			NOM HP	Start Torque	**Code no.**	Remark
	–10°F	+20°F	+45F				
TF4CLX	702	1285	2151	0.18	HST	**102U2102HS**	
TFS4.5CLX	926	1641	NA	0.2	HST	**102U2103HS**	
NF5.5CLX	1376	2209	3669	0.3	HST	**105F1621HS**	
NF7CLX	1716	2789	4669	0.4	HST	**105F1721HS**	
SC10CLX	1420	3096	5560	0.4	HST	**104L1503HS**	
SC12CLX	2374	NA	NA	0.6	HST	**104L1603HS**	
SC12CLX.2	2466	NA	NA	0.6	HST	**104L1696HS**	
SC15CLX.2	3000	5563	NA	0.8	HST	**104L1853HS**	
SC18CLX.2	3656	NA	NA	0.9	HST	**104L2198HS**	

R404A MBP Applications 115 V / 60 Hz							
Model	BTUH*			NOM HP	Start Torque	**Code no.**	Remark
	–10°F	+20°F	+45F				
SC12MLX	2330	4391	7616	0.5	HST	**104L1606HS**	
SC15MLX	2690	5070	8795	0.6	HST	**104L1805HS**	
SC15MLX.2	2840	5120	8740	0.6	HST	**104L1807HS**	
SC18MLX	3514	6296	10722	0.8	HST	**104L2105HS**	

*Rating conditions at ASHRAE rating point.

Standard Delivery Includes:
Start components, either HST or LST as specified, mounting parts set (bolt type, 16mm grommets), terminal cover & strain relief where appropriate.

Ordering *(continued)*

R404A LBP Applications 220 V / 60 Hz							
Model	BTUH*			NOM HP	Start Torque	**Code no.**	Remark
	–10°F	+20°F	+45F				
SC10CLX	1760	3395	NA	0.4	HST	**102U2536HS**	
SC12CLX	2374	4567	NA	0.6	HST	**105F2695HS**	
SC15CLX	2632	5042	NA	0.7	HST	**105F2854HS**	
SC12CLX.2	2404	NA	NA	0.6	HST	**104L2699HS**	
SC12CLX.2	2749	NA	NA	0.7	HST	**104L2697HS**	also 50 Hz
SC15CLX.2	3000	NA	NA	0.8	HST	**104L2897HS**	
SC18CLX.2	3449	NA	NA	0.9	HST	**104L2195HS**	
SC10/10CLX	3520	6790	NA	0.9	HST	**104L4033HS**	
SC12/12CLX	4748	9134	NA	1.2	HST	**104L4034HS**	
SC15/15CLX	5264	10084	NA	1.3	HST	**104L1097HS**	

R404A MBP Applications 220 V / 60 Hz							
Model	BTUH*			NOM HP	Start Torque	**Code no.**	Remark
	–10°F	+20°F	+45F				
NF7MLX	1543	2787	4669	0.3	HST	105F3720HS	
SC10MLX	1538	3590	6200	0.4	HST	104L2506HS	
SC12MLX	2209	4250	7259	0.5	HST	104L2606HS	
SC15MLX.2	2861	5122	8807	0.6	HST	104L2803HS	
SC18MLX	3514	6296	10722	0.8	HST	104L2138HS	

*Rating conditions at ASHRAE rating point.

Standard Delivery Includes:
Start components, either HST or LST as specified, mounting parts set (bolt type, 16mm grommets), terminal cover & strain relief where appropriate.

© Danfoss Inc. 01-07 (USCO)

Introduction

Danfoss fractional condensing units provide superior performance and efficient operation. These condensing units use well dimensioned condensing surfaces and ensure good ventilation around the compressor under operating conditions to provide long life and low energy consumption. They also provide quiet operation. Danfoss offers a wide range of fractional horsepower refrigeration condensing units for a variety of temperatures, refrigerants and voltage applications.

Features

Fan cooled from $^{1}/_{20}$ to $^{1}/_{2}$+ hp.

R134a and R404A.

UL, CUL and CE approvals.

Ideal for commercial and restaurant equipment.

Custom dimensions, features and control options are available by request.

Evaporator range from –50°F to 50°F are available.

Ordering

MBP Fan Cooled Condensing Units 115V / 60Hz R 134a / R 404A

Model	Code no.	Refrigerant	Application	HP	Capacity in BTUH @ Evap Temp (F)			
					10°F	20°F	30°F	40°F
TF4.5FT	**119-2202**	R134a	LBP/MBP	$^{1}/_{6}$	986	1200	1452	1707
NF7FX	**119-2207**	R134a	LBP/MBP	$^{1}/_{4}$	1364	1923	2249	2696
NF11FX	**119-2212**	R134a	MBP	$^{1}/_{3}$+	1913	2324	2817	3451
SC15GX	**119-2217**	R134a	LBP/HBP	$^{1}/_{2}$	2546	3204	4010	4884

LPB Fan Cooled Condensing Units 115V / 60Hz R 134a / R 404A

Model	Code no.	Refrigerant	Application	HP	Capacity in BTUH @ Evap Temp (F)			
					–40°F	–30°F	–20°F	–10°F
TF4CLX	**119-2302**	R404a	LBP/MBP	$^{1}/_{5}$	269	431	577	740
NF7CLX	**119-2307**	R404a	LBP/MBP	$^{1}/_{3}$	-	-	943	1306
SC12CLX	**119-2312**	R404a	LBP/MBP	$^{1}/_{2}$	6067	1172	1769	2400

Compressor Model Designation

1	2					3					4		5		6	7
Compressor Design	Protector Location					Optimization Level					Compressor Size		Application Range	Refrigerant	Code Letter for Starting Characteristics	Generation
	Internal		External													
	PTC "LST"	Relay "HST"	PTC	Relay	VSD*	Standard-High					Capacity at Rating Point	Displace-ment (cc)				
P	L					Blank	E[a]	Always Semidirect Intake			20, 30, 35, 50		CL=LBP	R404A/R507	Blank-Universal (Principal Rule)	Blank-First Generation
													CN=LBP	R290		
T			T	F	LV		E[b]	S	Y[a]	X[a]		2.5, 3, 4, 4.5, 4.8, 5, 5.7, 6, 6.5, 7, 7.5, 8, 8.7, 9, 10	DL=HBP	R404/R507		
													F=LBP/(MBP)	R134a		
													FT=LBP Tropical	R134a		
													G=LBP/MBP/HBP	R134a		
N								Always Semidirect Intake				5.2, 5.5, 5.7, 6, 6.5, 7, 7.3, 8.4, 8.8, 9, 10, 11, 13, 15	GH=Heat Pumps	R134a	K=LST Characteristics (Capillary Tube)	2-Second Generation
													GHH=Heat Pumps (opt.)	R134a	X=HST Characteristics (Expansion Valve)	3-Third Generation etc.
F	R											6, 7.5, 8.5, 10, 11	K=LBP/(MBP)	R600a		
													KT=LBP/(MBP) Tropical	R600a		
													MF=MBP	R134a		
S	C			C								10, 12, 15, 18, 21	MK=MBP	R600a		
													ML=MBP	R404A/R507		
													MN=MBP	R290		

*Variable Speed Drive

Blank = Standard
E = Semi-Direct Intake
Y = High Energy-Optimized
X = High Energy-Optimized

a) = RC Compulsory
b) = RC Optional

Serial number and date code information

Danfoss does not serialize the compressors but we do put a date stamp on them. Stamped into the shell above or just to the right of the paper label are two lines of data. The first line states the model designation and the code number, e.g. **L-4CL-2071:**

L = last letter (or last two letters) of the compressor type,

4CL = nominal displacement,

2071 = 4 last digits in the code no.

The second line contains the manufacturing place, the date of manufacture and an internal code,
e.g., **F-202E2207**:

F = Manufacturing place (F = Germany, AL = Slovenia, AM = Mexico),

20 = week 20,

2 = 2002,

E = Friday (A = Monday, etc.),

220 = nominal voltage,

7 = internal Danfoss Code.

Beginning in 2002 Danfoss started to introduce a new coding consisting of two lines,
e.g., **H47117:**
043C12A.

First line:

H4711 = 5 last digits in the code no.,

7 = internal Danfoss Code.

Second line:

04 = week 04,

3 = 2003,

C = Wednesday (A = Monday, etc.),

12 = Internal Danfoss Code,

A = Manufacturing place (A-G = Germany, K-N = Slovenia, R-S = Mexico).

© Danfoss Inc. 01-07 (USCO)

Introduction

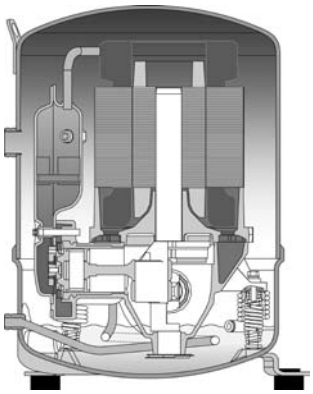

Maneurop reciprocating compressors are designed for light commercial air conditioning applications as well as refrigeration applications.

Thanks to the very large internal volume, large oil sump, the sturdy design of compressor parts and its 100% suction gas cooled motor, the Maneurop reciprocating compressor has proven its ability to withstand the most harsh conditions where other compressors may fail.

Features

Both MT and MTZ compressors have a large internal free volume that reduces the risk of slugging when liquid refrigerant enters the compressor. Because they are fully cooled by suction gas, no additional compressor cooling is required. Compressors can be insulated with acoustic jackets to obtain lower sound levels without risk of overheating.

A sight glass and oil equalization connection are features in these compressors.

Serial Number Nomenclature

Format: AB CC DDDDDDD
Where A = year built, B = month built, CC = Factory code, DDDDDDD = Serial number
Example: MC 10 5264747 = compressor built in March 2001 at Trevoux factory

Year	Month	Factory code
F = 1995	A = Jan	10 = Trevoux, France
G = 1996	B = Feb	11 = Anse, France
H = 1997	C = March	14 = Lawrenceville, GA
J = 1998	D = April	
K = 1999	E = May	
L = 2000	F = June	
M = 2001	G = July	
N = 2002	H = Aug	
P = 2003	J = Sept	
Q = 2004	K = Oct	
	L = Nov	
	M = Dec	

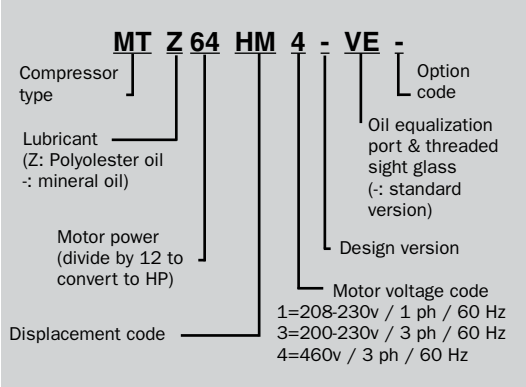

Compressore Nomenclature

Code no.	Available Motor Codes*	Hp	MT-R22			MTZ-R407C			MTZ-R134a			MTZ-R404A/507A			MCC	LRA	Discharge Conn	Suction Conn	Ship Weight
			kW	BTUH	EER	kW	BTUH	EER	kW	BTUH	EER	kW	BTUH	EER					
MT/MTZ18	1,3,4	1.5	1.74	15,900	9.15	1.67	15,300	9.13	1.22	11,200	9.2	1.76	10,300	5.1	13	51	1″	1″	50
MT/MTZ22	1,3,4	2	2.27	22,000	9.68	2.17	19,600	9	1.54	14,800	9.63	2.05	14,100	6.01	17	49.3	1″	1 1/4″	50
MT/MTZ28	1,3,4	2.5	3.07	30,200	9.86	2.83	25,100	8.9	2.04	19,300	9.42	2.68	18,300	5.96	25	81	1″	1 1/4″	55
MT/MTZ32	1,3,4	2.75	3.58	33,000	9.22	3.21	28,400	8.86	2.39	20,900	8.76	2.99	20,100	5.85	26.5	84	1″	1 1/4″	60
MT/MTZ36	1,3,4	3	4.05	38,000	9.38	3.75	32,700	8.73	2.75	24,500	8.91	3.34	23,200	6.05	30	84	1″	1 1/4″	60
MT/MTZ40	1,3,4	3.5	4.63	42,900	9.27	4.33	37,400	8.64	3.08	27,900	9.03	3.77	26,400	6.11	34	99	1″	1 1/4″	60
MT/MTZ44	1,3,4	4	4.67	45,200	9.69	4.37	43,000	9.84	3.14	29,800	9.51	4.18	27,800	6.65	31	97	1 1/4″	1 3/4″	85
MT/MTZ50	1,3,4	4.5	5.18	50,500	9.74	4.96	48,100	9.71	3.6	34,500	9.57	4.83	32,500	6.73	36	114	1 1/4″	1 3/4″	85
MT/MTZ56	1,3,4,7	5	6.05	56,400	9.32	5.67	54,300	9.59	3.95	38,000	9.62	5.44	36,500	6.71	46	146	1 1/4″	1-5/8″	90
MT/MTZ64	1,3,4	5.5	6.8	64,800	9.53	6.36	60,400	9.5	4.68	45,300	9.66	6.12	41,500	6.78	53	148	1 1/4″	1 3/4″	90
MT/MTZ72	3,4	6	7.58	70,100	9.26	7.22	67,900	9.41	5.19	50,000	9.63	6.91	46,500	6.72	31	135	1 1/4″	1 3/4″	90
MT/MTZ80	3,4	7	8.56	80,000	9.35	8.24	76,900	9.33	6	56,500	9.42	8.03	52,500	6.54	36	140	1 1/4″	1 3/4″	90
MT/MTZ100	3,4,7	9	9.59	95,900	10	9.9	94,400	9.53	6.5	63,900	9.84	8.72	60,800	6.07	43	157	1 1/4″	1 3/4″	145
MT/MTZ125	3,4,7	10	12.81	124,600	9.73	12.62	122,100	9.67	7.72	78,900	10.22	11.37	78,400	6	54	210	1 1/4″	1 3/4″	150
MT/MTZ144	3,4,7	12	14.36	140,700	9.8	14.47	137,200	9.48	9.82	96,900	9.87	13	92,300	6.19	64	259	1 1/4″	1 3/4″	155
MT/MTZ160	3	13.5	16.09	156,800	9.75	16.67	155,100	9.31	10.92	107,600	9.85	14.74	100,300	5.93	70	259	1 1/4″	1 3/4″	165

* Motor Codes	
Code	Description
1	208-230V / 1ph / 60Hz
3	200-230V / 3ph / 60Hz
4	460V / 3ph / 60Hz
7	575V / 3ph / 60hz

MCC- Maximum continuous current (A)
LRA- Locked rotor current (A)
Ratings at ARI conditions for R134a / R22 / R407C : 45°F evap, 130°F cond, 15°F subcooling, 20°F superheat
Ratings at ARI conditions for R404A / R507: 20°F evap, 120°F cond, 15°F subcooling, 20°F superheat

© Danfoss Inc. 01-07 (USCO)

Accessories

Reciprocating Compressor Accessories																							
Rotolock Valves		Compressor Types and Sizes																					
Code no.	Description	Type MT / MTZ																Type LT / LTZ					
		18	22	28	32	36	40	44	50	56	64	72	80	100	125	144	160	22	28	44	50	88	100
6804500	Rotolock 1" R x $^3/_8$" S	X	X	X	X	X	X											X	X				
6804501	Rotolock 1" R x $^1/_2$" S	X	X	X	X	X	X											X	X				
6804502	Rotolock $1^1/_4$" R x $^5/_8$" S		X	X	X	X	X											X	X				
6804503	Rotolock $1^1/_4$" R x $^3/_4$" S		X	X	X	X	X	X	X	X	X	X	X	X	X	X	X	X	X	X	X	X	X
6804504	Rotolock $1^1/_4$" R x $^7/_8$" S		X	X	X	X	X	X	X	X	X	X	X	X	X	X	X	X	X	X	X	X	X
6804505	Rotolock $1^3/_4$" R x $^7/_8$" S							X	X	X	X	X	X	X	X	X	X			X	X	X	X
6804506	Rotolock $1^3/_4$" R x $1^1/_8$" S							X	X	X	X	X	X	X	X	X	X			X	X	X	X
6804010	Rotolock $1^3/_4$" R x $1^3/_8$" S							X	X	X	X	X	X	X	X	X	X			X	X	X	X
8156009	Complete Teflon Gasket Kit	X	X	X	X	X	X	X	X	X	X	X	X	X	X	X	X	X	X	X	X	X	X
Rotolock Solder Sleeves (non standard sizes)																							
Code no.	Description	Type MT / MTZ																Type LT / LTZ					
8153012	$1^1/_4$" R x $^7/_8$" S		X	X	X	X	X	X	X	X	X	X	X	X	X	X	X			X	X	X	X
8153003	$1^3/_4$" R x 1-$^3/_8$" S							X	X	X	X	X	X	X	X	X	X			X	X	X	X
Rotolock Nuts																							
Code no.	Description	Type MT / MTZ																Type LT / LTZ					
A104174P01	$1^1/_4$" Rotolock Nut		X	X	X	X	X	X	X	X	X	X	X	X	X	X	X	X	X	X	X	X	X
A104174P02	$1^3/_4$" Rotolock Nut							X	X	X	X	X	X	X	X	X	X			X	X	X	X
A104174P05	1" Rotolock Nut	X	X	X	X	X	X											X	X				
Installation / Mounting Kits (* some mounting kits are voltage specific)																							
Code no.	Description	Type MT / MTZ																Type LT / LTZ					
5710058P01	Mounting kits include mounting grommets, sleeves, nuts bolts washers, also included are solder sleeves, teflon gaskets and installation instructions		X	X	X	X												X	X				
5710058P02		X	X	X																			
5710058P03													X								X		
5710058P04								X	X	X	X	X								X			
5710058P05														X	X	X	X					X	X
Crankcase Heaters																							
Code no.	Description	Type MT / MTZ																Type LT / LTZ					
PTC	35 watt, 200-600 volt	X	X	X	X	X	X	X	X	X	X	X	X	X	X	X	X	X	X	X	X	X	X
Oil Sight Glass																							
Code no.	Description	Type MT / MTZ																Type LT / LTZ					
6204001	Oil Sight glass (all models)	X	X	X	X	X	X	X	X	X	X	X	X	X	X	X	X	X	X	X	X	X	X
Lubricants																							
Code no.	Description	Type MT / MTZ																Type LT / LTZ					
7754027	1 Gallon POE oil for LTZ																	X	X	X	X	X	X
Acoustic Hoods																							
Code no.	Description	Type MT / MTZ																Type LT / LTZ					
7755001	Acoustic Hood	X	X	X	X	X	X											X	X				
7755002	Acoustic Hood							X	X	X	X	X	X							X	X		
7755003	Acoustic Hood													X	X	X	X					X	X

Code no.	Available Motor Codes *	Hp	R404A/507A LTZ				R502 LT				MCC	LRA	Discharge Conn.	Suction Conn.	Ship. weight
			–10°F Evap		–30°F Evap		–10°F Evap		–30°F Evap						
			kW	BTUH	kW	BTUH	kW	BTUH	kW	BTUH					
LT/LTZ22	1,3,4	2	1.75	5230	1.16	2950	1.81	5925	1.2	2720	17	49.3	1″	$1^1/_4$″	50
LT/LTZ28	1,3,4	2.5	2.58	7890	1.7	4510	2.71	9805	1.8	5385	25	81	1″	$1^1/_4$″	50
LT/LTZ44	1,3,4	4	4.37	13520	3.1	7540	4.02	16051	2.75	7820	34	103	$1^1/_4$″	$1^3/_4$″	80
LT/LTZ50	1,3,4	4.5	5.46	17470	3.93	10360	5.33	19027	3.65	10420	37	143	$1^1/_4$″	$1^3/_4$″	85
LT/LTZ88	3,4	7.5	8.32	26860	5.86	14440	7.74	29427	5.3	16000	43	157	$1^1/_4$″	$1^3/_4$″	140
LT/LTZ100	3,4	9	10.56	35480	7.23	19930	10.32	38911	7.25	22615	54	210	$1^1/_4$″	$1^3/_4$″	150

* Motor Codes	
Code	Description
1	208-230V / 1ph / 60Hz
3	200-230V / 3ph / 60Hz
4	460V / 3ph / 60Hz

MCC- Maximum continuous current (A)
LRA- Locked rotor current (A)
* Rated Condition: R404A / R507, –10°F Evap, 130°F Cond, 15°F subcooling, 20°F superheat
** Rated Condition: R404A / R507, –30°F Evap, 120°F Cond, 15°F subcooling, 20°F superheat

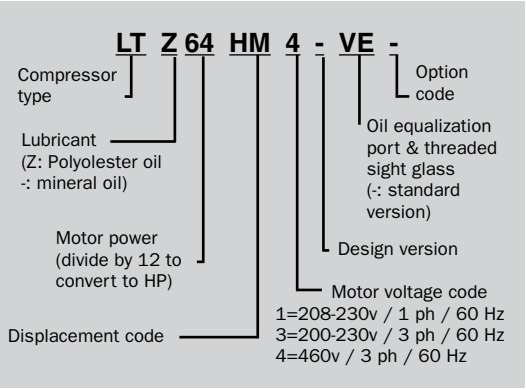

 © Danfoss Inc. 01-07 (USCO)

Introduction

Performer® scroll compressors are specially designed for commercial air conditioning applications. There is no contact between the scroll flanks in a Performer scroll compressor. The ultra-precise scroll profiles with controlled orbit, roll and slide on an oil film without friction or wear. Floating tip seals ensure axial sealing with low friction losses. With these techniques, the Performer scroll compressor combines high energy efficiency with low sound and vibration characteristics. The 100% suction gas cooled and shielded motor, built-in motor protection, large oil reserve and large internal free volume ensure high reliability and long lifetime.

Features

1. Optimized discharge assembly for low noise and higher efficiency.
2. Precision balanced moving parts to reduce vibration.
3. Shielded motor, 100% suction gas cooled.
4. Carefully designed channel with low resistance to suction gas.
5. Compact footprint and light weight.
6. Ultra precise scroll profile. No contact between scroll flanks but sealing with oil film.
7. Floating tip seals for perfect axial sealing, reducing friction losses.
8. Multiple knock-out terminal box. Electronic module for motor protection and reverse rotation protection on models 240 & 300.
9. Advanced oil management.
10. Large oil sump and large internal free volume.

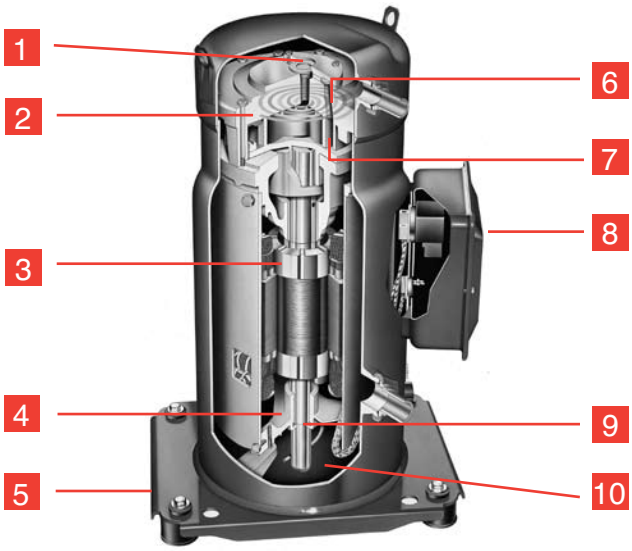

Serial Number Nomenclature

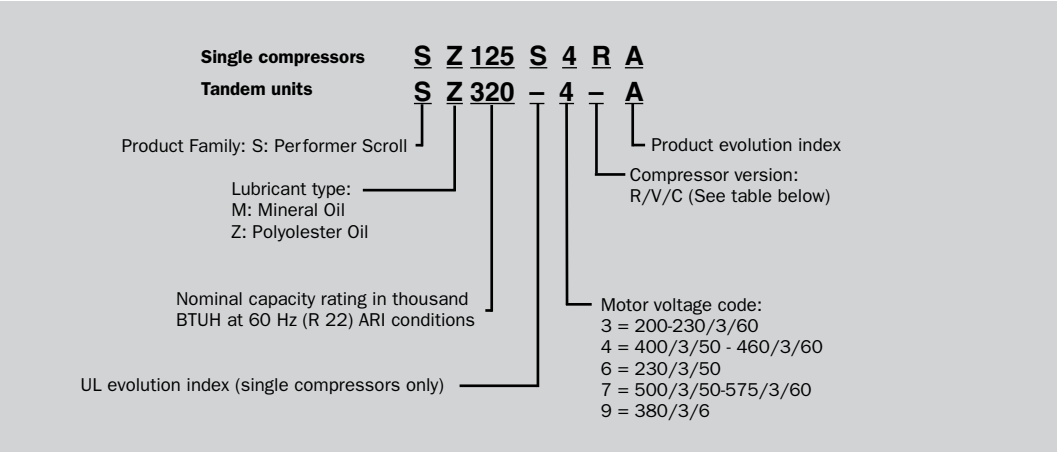

Model	SM/SZ 084-090-100-110-120-161	SM/SZ 115-125-160-175-185	
Version	V	R	C
Suction and discharge connection	brazed	rotolock	brazed
Oil sight glass	threaded	threaded	threaded
Oil equalization connection	3/8" flare	3/8" flare	3/8" flare
Oil drain connection	—	1/4" NPT	1/4" NPT
* Low pressure gauge port (schrader)	1/4" flare	1/4" flare	1/4" flare

*Tandem units are also fitted with a high side gauge port (1/4" flare)

Format: AB CC DDDDDDD
Where A = year built, B = month built, CC = Factory code, DDDDDDD = Serial number
Example: MC 10 5264747 = compressor built in March 2001 at Trevoux factory

Year	Month	Factory code
F = 1995	A = Jan	10 = Trevoux, France
G = 1996	B = Feb	11 = Anse, France
H = 1997	C = March	14 = Lawrenceville, GA
J = 1998	D = April	
K = 1999	E = May	
L = 2000	F = June	
M = 2001	G = July	
N = 2002	H = Aug	
P = 2003	J = Sept	
Q = 2004	K = Oct	
	L = Nov	
	M = Dec	

© Danfoss Inc. 01-07 (USCO)

Performer Scroll Compressors

Single compressors R 407C 60Hz											
Model	Motor Voltage Hz/Ph code	Nominal capacity (Tons)	Nominal capacity BTUH	Power input (kW)	EER (BTUWH)	Sound power dBA	Compressor Body Style		Connection Sizes		Ship. weight lbs.
							V	C	Rotolock Size Suction x Discharge	Adapter Tube Size Suction x Discharge	
SZ084	3-4-7-9	7	76,900	7.06	10.9	78	1 1/8" x 3/4"	-	-	-	159
SZ090	3-4-7-9	7.5	83,300	7.63	10.9	78	1 1/8" x 3/4"	-	-	-	159
SZ100	3-4-7-9	8	90,500	8.18	11	78	1 1/8" x 3/4"	-	-	-	159
SZ110	3-4-7-9	9	102,800	9.29	11.1	81	1 3/8" x 7/8"	-	-	-	176
SZ115	3-4-7-9	9.5	112,000	10.22	10.9	81	-	1 3/8" x 7/8"	1 3/4"x 1 1/4"	1 1/8" x 3/4"	176
SZ120	3-4-7-9	10	118,900	10.75	11.1	81	1 3/8" x 7/8"				176
SZ125	3-4-7-9	10	119,200	10.89	10.9	81	-	1 3/8" x 7/8"	1 3/4" x 1 1/4"	1 1/8" x 3/4"	176
SZ160	3-4-7-9	13	155,400	14.08	11	85	-	1 5/8" x 1 1/8"	2 1/4" x 1 3/4"	1 3/8" x 7/8"	207
SZ161	3-4	13	156,900	14.32	10.9	85	1 3/8" x 7/8"	-	-	-	190
SZ175	3-4-7-9	14	166,200	15.28	10.9	84	-	1 5/8" x 1 1/8"	2 1/4" x 1 3/4"	1 3/8" x 7/8"	227
SZ185	3-4-7-9	15	176,800	16.43	10.7	84	-	1 5/8" x 1 1/8"	2 1/4" x 1 3/4"	1 3/8" x 7/8"	227

Motor Codes	
Code	Description
3	200-230V / 3ph / 60 Hz
4	460V / 3ph / 60 Hz
7	575V/ 3ph / 60 Hz
9	380V / 3ph / 60 Hz

Compressor Connection Codes	V	C	Rotolock
suction and discharge connection	brazed	brazed	rotolock
oil sight glass	threaded	threaded	threaded
oil equalization connection	3/8 " flare	3/8 " flare	3/8 " flare
oil drain connection	-	1/4 " NPT	1/4 " NPT
low pressure guage port (schrader)	1/4 " flare	1/4 " flare	1/4 " flare

Tandem compressors R 407C 60Hz											
Model	Motor Voltage Hz/Ph * code	Nominal capacity (Tons)	Nominal capacity BTUH	Power input (kW)	EER (BTUWH)	Sound power dBA	Sweat system connection		Compressor rotolock connection		Ship. weight lbs.
							suction	discharge	Rotolock	Adapter	
SZ170	3-4-7-9	13.5	151,500	14.11	10.7	81	1 5/8"	1 1/8"	-	-	331
SZ180	3-4-7-9	15	164,100	15.26	10.7	81	1 5/8"	1 1/8"	-	-	331
SZ200	3-4-7-9	16	178,300	16.35	10.9	81	1 5/8"	1 1/8"	-	-	331
SZ220	3-4-7-9	18	202,400	18.56	10.9	84	2 1/8"	1 3/8"	-	-	375
SZ230	3-4-7-9	19	220,700	20.43	10.8	84	1 5/8"	1 1/8"	1 3/4" x 1 1/4"	1 1/8" x 3/4"	375
SZ242	3-4-7-9	20	234,300	21.48	10.9	84	2 1/8"	1 3/8"	-	-	375
SZ250	3-4-7-9	20	234,700	21.77	10.8	84	1 5/8"	1 1/8"	1 3/4" x 1 1/4"	1 1/8" x 3/4"	375
SZ285	3-4-7-9	23	270,400	24.97	10.8	86.5	2 1/8"	1 1/8"	-	-	441
SZ290	3-4-7-9	23.5	274,000	25.5	10.7	86	2 1/8"	1 1/8"	-	-	441
SZ310	3-4-7-9	25	291,500	27.32	10.7	86	2 1/8"	1 1/8"	-	-	441
SZ320	3-4-7-9	26	306,100	28.14	10.9	88	2 1/8"	1 3/8"	2 1/4" x 1 3/4"	1 3/8" x 7/8"	463
SZ322	3-4-7-9	26	309,100	28.62	10.8	88	2 1/8"	1 3/8"	-	-	424
SZ350	3-4-7-9	28	327,300	30.54	10.7	87	2 1/8"	1 3/8"	2 1/4" x 1 3/4"	1 3/8" x 7/8"	496
SZ370	3-4-7-9	30	348,200	32.84	10.6	87	2 1/8"	1 3/8"	2 1/4" x 1 3/4"	1 3/8" x 7/8"	496

*See serial number nomenclature on page 120.

Performer Scroll Compressors

Single compressors R 22 60Hz											
Model	Motor Voltage Hz/Ph * code	Nominal capacity (Tons)	Nominal capacity BTUH	Power input (kW)	EER (BTUWH)	Sound power dBA	Compressor Body Style		Connection Sizes		Ship. weight
							V	C	Rotolock Size	Adapter Tube Size	
									Suction x Discharge	Suction x Discharge	lbs.
SM084	3-4-7-9	7	84,400	7.38	11.4	75	1 1/8" x 3/4"	-	-	-	159
SM090	3-4-7-9	7.5	90,000	7.82	11.5	75	1 1/8" x 3/4"	-	-	-	159
SM100	3-4-7-9	8	94,000	8.14	11.5	75	1 1/8" x 3/4"	-	-	-	159
SM110	3-4-7-9	9	107,800	9.35	11.5	78	1 3/8" x 7/8"	-	-	-	176
SM115	3-4-7-9	9.5	115,200	10.8	11.4	79	-	1 3/8" x 7/8"	1 3/4" x 1 1/4"	1 1/8" x 3/4"	176
SM120	3-4-7-9	10	125,300	10.8	11.6	78	1 3/8" x 7/8"				176
SM125	3-4-7-9	10	126,400	10.99	11.5	79	-	1 3/8" x 7/8"	1 3/4" x 1 1/4"	1 1/8" x 3/4"	176
SM160	3-4-7-9	13	163,000	14.22	11.5	84	-	1 5/8" x 1 1/8"	2 1/4" x 1 3/4"	1 3/8" x 7/8"	207
SM161	3-4	13	162,600	14.07	11.5	84	1 3/8" x 7/8"	-	-	-	190
SM175	3-4-7-9	14	174,300	15.27	11.4	82.5	-	1 5/8" x 1 1/8"	2 1/4" x 1 3/4"	1 3/8" x 7/8"	227
SM185	3-4-7-9	15	185,400	16.22	11.4	82.5	-	1 5/8" x 1 1/8"	2 1/4" x 1 3/4"	1 3/8" x 7/8"	227
SY240	3-4-7-9	20	252,800	22.14	11.4	89	-	1 5/8" x 1 1/8"	2 1/4" x 1 3/4"	1 5/8" x 1 1/8"	353
SY300	3-4-7-9	25	322,600	27.55	11.7	91	-	1 5/8" x 1 1/8"	2 1/4" x 1 3/4"	1 5/8" x 1 1/8"	353

Tandem compressors R 22 60Hz											
Model	Motor Voltage Hz/Ph * code	Nominal capacity (Tons)	Nominal capacity BTUH	Power input (kW)	EER (BTUWH)	Sound power dBA	Sweat system connection		Compressor rotolock connection		Ship. weight
							Suction	Discharge	Rotolock	Adapter	
											lbs.
SM170	3-4-7-9	13.5	165,500	14.74	11.2	78	1 5/8"	1 1/8"	-	-	331
SM180	3-4-7-9	15	177,300	15.63	11.3	78	1 5/8"	1 1/8"	-	-	331
SM200	3-4-7-9	16	185,200	16.28	11.4	78	1 5/8"	1 1/8"	-	-	331
SM220	3-4-7-9	18	212,400	18.69	11.4	81	2 1/8"	1 3/8"	-	-	375
SM230	3-4-7-9	19	226,900	20.14	11.3	82	1 5/8"	1 1/8"	1 3/4" x 1 1/4"	1 1/8" x 3/4"	375
SM242	3-4-7-9	20	246,900	21.6	11.4	81	2 1/8"	1 3/8"	-	-	375
SM250	3-4-7-9	20	249,000	21.96	11.3	82	1 5/8"	1 1/8"	1 3/4" x 1 1/4"	1 1/8" x 3/4"	375
SM285	3-4-7-9	23	285,000	25.21	11.3	85	2 1/8"	1 1/8"	-	-	441
SM290	3-4-7-9	23.5	285,100	25.35	11.2	84	2 1/8"	11 1/8"	-	-	441
SM310	3-4-7-9	25	307,100	27.21	11.3	84	2 1/8"	1 1/8"	-	-	441
SM320	3-4-7-9	26	321,000	28.42	11.3	87	2 1/8"	1 3/8"	2 1/4" x 1 3/4"	1 3/8" x 7/8"	463
SM322	3-4-7-9	26	320,200	28.12	11.3	87	2 1/8"	1 3/8"	-	-	424
SM350	3-4-7-9	28	343,400	30.53	11.2	85.5	2 1/8"	1 3/8"	2 1/4" x 1 3/4"	1 3/8" x 7/8"	496
SM370	3-4-7-9	30	365,300	32.42	11.3	85.5	2 1/8"	1 3/8"	2 1/4" x 1 3/4"	1 3/8" x 7/8"	496

*See serial number nomenclature on page 120.

© Danfoss Inc. 01-07 (USCO)

Universal OEM Replacement Scroll Compressors

Direct drop-in for below applications			
Model	Nominal Capacity	Connection Type	Voltage
SM115-3QAI	9T	1-3/8" x 7/8" Brazed	230V/3/60Hz
SM115-4QAI	9T	1-3/8" x 7/8" Brazed	460V/3/60Hz
SM125-3QAI	10T	1-3/8" x 7/8" Brazed	230V/3/60Hz
SM125-4QAI	10T	1-3/8" x 7/8" Brazed	460V/3/60Hz
SM175-3QAI	14T	1-5/8" x 1-1/8" Brazed	230V/3/60Hz
SM175-4QAI	14T	1-5/8" x 1-1/8" Brazed	460V/3/60Hz
SM185-3QAI	15T	1-5/8" x 1-1/8" Brazed	230V/3/60Hz
SM185-4QAI	15T	1-5/8" x 1-1/8" Brazed	460V/3/60Hz

Accessories

Scroll Compressor Accessories

Rotolock valves & nuts		Single compressors													Tandem compressors													
Code no.	Description	sm-z 084	sm-z 090	sm-z 100	sm-z 110	sm-z 115	sm-z 120	sm-z 125	sm-z 160	sm-z 161	sm-z 175	sm-z 185	SY 240	SY 300	sm-z 170	sm-z 180	sm-z 200	sm-z 220	sm-z 230	sm-z 242	sm-z 250	sm-z 285	sm-z 290	sm-z 310	sm-z 320	sm-z 322	sm-z 350	sm-z 370
6804506	Rotolock $1^3/_4$"R x $1^1/_8$"S					X		X	X		X	X																
6804505	Rotolock $1^3/_4$"R x $^7/_8$"S					X		X	X		X	X																
6804503	Rotolock $1^1/_4$"R x $^3/_4$"S					X		X																				
6804526	Rotolock $2^1/_4$"R x $1^3/_8$"S								X		X	X																
6804010	Rotolock $1^3/_4$"R x x $1^3/_8$"S					X		X	X		X	X																
A104174P01	$1^1/_4$" Rotolock Nut					X		X											X		X							
A104174P02	$1^3/_4$" Rotolock Nut					X		X	X		X	X													X		X	X
A104174P03	$2^1/_4$" Rotolock Nut								X		X	X	X	X											X		X	X
8156009	Teflon Gasket Kit	x	x	x	x		x																					
8156013	Teflon Gasket Kit					x		x	x		x	x																

Rotolock Solder Sleeve Adaptors

Code no.	Description	Single compressors													Tandem compressors													
8153003	$1^3/_8$"S x $1^3/_4$"R				X	X	X	X		X																		
8153004	$1^1/_8$"S x $1^3/_4$"R	X	X	X																								
8153005	$1^3/_8$"S x $2^1/_4$"R								X		X														X		X	X
8153006	$1^5/_8$"S x $2^1/_4$"R								X		XX	X	X	X														
8153008	$^3/_4$"S x $1^1/_4$"R	X	X	X	X	X	X	X	X	X																		
8153012	$^7/_8$"S x $1^1/_4$"R				X	X	X	X		X																		
8153013	$^7/_8$"S x $1^3/_4$"R								X		X	X																
7765005	Adaptor Kit *	X	X	X																								
7765006	Adaptor Kit *				X		X																					

* Adaptor Kits come with 2 Rotolock adaptors, 2 Rotolock nuts, 2 solder sleeves and 2 gaskets

Sound Jackets

Code no.	Description	Single compressors													Tandem compressors													
7755007	Sound Jacket										X	X																
7755008	Sound Jacket								X																			
7755009	Sound Jacket					X		X																				
7755010	Sound Jacket				X		X																					
7755011	Sound Jacket	X	X	X																								

Mounting Parts

Code no.	Description	Single compressors													Tandem compressors													
8156138	4 grommets and 4 bolt sleeves	X	X	X	X	X	X	X	X	X	X	X	X	X	X	X	X	X	X	X	X	X	X	X	X	X	X	X

Lubricants

Code no.	Description	Single compressors													Tandem compressors													
5402007	1 Gallon mineral oil																											
7754027	1 Gallon POE oil for SZ types																											

© Danfoss Inc.01-07 (USCO)

Danfoss scroll compressors are the quietest, most reliable and longest-lasting compressors in the HVAC&R industry.

Key features include:

- Simple, compact design
- Lightweight construction
- 90% of internal bolts have been eliminated
- One-third fewer parts than competitive models

Nomenclature

Danfoss Scroll compressor model numbers have significance as indicated below:

Type	Size	Motor	Features
HRH	036	U1L	P6

Application
H: high temperature air conditioning

Family
D: residential scroll
C: light commercial scroll
R: residential scroll (new platform)
L: light commercial scroll (new platform)

Refrigerant and lubricant
M: R-22, mineral or alkylbenzene oil
P: R-407C, POE lubricant
H: R-410A, POE lubricant
J: R-410A, PVE lubricant

Nominal capacity
In thousands of Btu/h @ 60Hz, ARI conditions

Model variation
T: design optimized for 7.2/54.4 (45/130)
U: design optimized for 7.2/37.8 (45/100)

Other features

	Oil sight glass	Oil equalization	Oil drain	LP gauge port
2	None	None	None	Schrader
5	Thread	Rotolock	NPT	Schrader
6	None	None	None	None
7	Thread	None	None	None
8	None	Brazed	None	None

Tubing and electrical connections
P: brazed connections, spade terminals
C: brazed connections, screw terminals

Motor protection
L: internal motor protection

Motor voltage code
1: 208-230 V 1~ 60 Hz
2: 208-230 V 3~ 60 Hz
4: 380-400 V 3~ 50 Hz and 460 V 3~ 60 Hz
5: 220-240 V 1~ 50 Hz and 265 V 1~ 60 Hz
7: 500 V 3~ 50 Hz and 575 V 3~ 60 Hz
9: 380 V 3~ 60 Hz

Voltage

Voltage Codes	Copeland	Danfoss
208-230V/1~/60Hz	PFV	1
208-230V/3~/60Hz	TFC or TF5	2
380V/3~/60Hz & 460V/3~/60Hz	TFD	4

Note on SEER ratings:
The Scroll Tech compressors have motors optimized for the different SEER ratings. Use motor variation «U» for 13 SEER applications and «T» for 10 SEER

Cross Reference - R-22

Copeland	Tons	Btu/h	Scroll Tech	Btu/h	Old ST Model #	Model #	Code#	Voltage
ZR32**-***-***	2-3/4	32,000	HRM032-***-**	32,000	XCD320HA	HRM032U1LP6	120U0921	230 / 1
ZR32**-***-***	2-3/4	32,000	HRM032-***-**	32,000	XCH322HA	HRM032U4LP6	120U0996	460 / 3
ZR34**-***-***	3	34,000	HRM034-***-**	34,000	XCD340HA	HRM034U1LP6	120U0926	230 / 1
ZR34**-***-***	3	34,000	HRM034-***-**	34,000	XCY342HA	HRM034U2LP6	120U1081	230 / 3
ZR34**-***-***	3	34,000	HRM034-***-**	34,000	XCH342HA	HRM034U4LP6	120U1001	460 / 3
ZR36**-***-***	3	36,500	HRM038-***-**	38,000	XCD380HA	HRM038U1LP6	120U0931	230 / 1
ZR36**-***-***	3	36,500	HRM038-***-**	38,000	XCY382HA	HRM038U2LP6	120U1091	230 / 3
ZR36**-***-***	3	36,500	HRM038-***-**	38,000	XCH382HA	HRM038U4LP6	120U1011	460 / 3
ZR40**-***-***	3-1/4	40,000	HRM040-***-**	40,000	XCD400HA	HRM040U1LP6	120U0936	230 / 1
ZR40**-***-***	3-1/4	40,000	HRM040-***-**	40,000	XCY402HA	HRM040U2LP6	120U1101	230 / 3
ZR40**-***-***	3-1/4	40,000	HRM040-***-**	40,000	XCH402HA	HRM040U4LP6	120U1021	460 / 3
ZR42**-***-***	3-1/2	42,000	HRM042-***-**	42,000	XCD420HA	HRM042U1LP6	120U0941	230 / 1
ZR42**-***-***	3-1/2	42,000	HRM042-***-**	42,000	XCY422HA	HRM042U2LP6	120U1111	230 / 3
ZR42**-***-***	3-1/2	42,000	HRM042-***-**	42,000	XCH422HA	HRM042U4LP6	120U1031	460 / 3
ZR47**-***-***	4	47,500	HRM047-***-**	47,000	XCD470HA	HRM047U1LP6	120U0951	230 / 1
ZR47**-***-***	4	47,500	HRM047-***-**	47,000	XCY472HA	HRM047U2LP6	120U1131	230 / 3
ZR47**-***-***	4	47,500	HRM047-***-**	47,000	XCH472HA	HRM047U4LP6	120U1051	460 / 3
ZR54**-***-***	5	54,200	HRM054-***-**	54,000	XRD540HA	HRM054U1LP6	120U1511	230 / 1
ZR54**-***-***	5	54,200	HRM054-***-**	54,000	XRY542HA	HRM054U2LP6	120U1871	230 / 3
ZR54**-***-***	5	54,200	HRM054-***-**	54,000	XRH542HA	HRM054U4LP6	120U1696	460 / 3
ZR54**-***-***	5	54,200	HRM054-***-**	54,000	XRJ542HA	HRM054U7LP6	120U1811	575 / 3
ZR57**-***-***	4-3/4	57,500	HRM058-***-**	58,000	XRD580HA	HRM058U1LP6	120U1531	230 / 1
ZR57**-***-***	4-3/4	57,500	HRM058-***-**	58,000	XRY582HA	HRM058U2LP6	120U1876	230 / 3
ZR57**-***-***	4-3/4	57,500	HRM058-***-**	58,000	XRH582HA	HRM058U4LP6	120U1711	460 / 3
ZR61**-***-***	5	61,200	HRM060-***-**	60,000	XRD600HA	HRM060U1LP6	120U1546	230 / 1
ZR61**-***-***	5	61,200	HRM060-***-**	60,000	XRY602HA	HRM060U2LP6	120U1881	230 / 3
ZR61**-***-***	5	61,200	HRM060-***-**	60,000	XRH602HA	HRM060U4LP6	120U1736	460 / 3
ZR68**-***-***	5-1/2	68,500	HLM068-***-**	68,000	XRD680AA	HLM068T1LP6	120U1556	230 / 1
ZR68**-***-***	5-1/2	68,500	HLM068-***-**	68,000	XRY682AE	HLM068T2LC6	120U1891	230 / 3
ZR68**-***-***	5-1/2	68,500	HLM068-***-**	68,000	XRH682AE	HLM068T4LC6	120U1746	460 / 3
ZR72**-***-***	6	73,500	HLM072-***-**	72,000	XRD720AA	HLM072T1LP6	120U1566	230 / 1
ZR72**-***-***	6	73,500	HLM072-***-**	72,000	XRY722AE	HLM072T2LC6	120U1896	230 / 3
ZR72**-***-***	6	73,500	HLM072-***-**	72,000	XRH722AE	HLM072T4LC6	120U1751	460 / 3
ZR81**-***-***	6	81,100	HLM081-***-**	81,000	XRD810AA	HLM081T1LP6	120U1586	230 / 1
ZR81**-***-***	6	81,100	HLM081-***-**	81,000	XRY812AE	HLM081T2LC6	120U1911	230 / 3
ZR81**-***-***	6	81,100	HLM081-***-**	81,000	XRH812AE	HLM081T4LC6	120U1776	460 / 3
ZR84**-***-***	7	84,000	HLM081-***-**	81,000	XRD810AA	HLM081T1LP6	120U1586	230 / 1
ZR84**-***-***	7	84,000	HLM081-***-**	81,000	XRY812AE	HLM081T2LC6	120U1911	230 / 3
ZR84**-***-***	7	84,000	HLM081-***-**	81,000	XRH812AE	HLM081T4LC6	120U1776	460 / 3
ZR90**-***-***	7-1/2	89,000	HCM094-***-**	94,000	SRY942AU	HCM094T2LC8	120U0901	230 / 3
ZR90**-***-***	7-1/2	89,000	HCM094-***-**	94,000	SRH942AU	HCM094T4LC8	120U0596	460 / 3
ZR94**-***-***	7-1/2	94,000	HCM094-***-**	94,000	SRY942AU	HCM094T2LC8	120U0901	230 / 3
ZR94**-***-***	7-1/2	94,000	HCM094-***-**	94,000	SRH942AU	HCM094T4LC8	120U0596	460 / 3
ZR11**-***-***	9	108,300	HCM109-***-**	109,000	SRH109AE	HCM109T4LC6	120U0366	460 / 3
ZR108**-***-***	9	108,900	HCM109-***-**	109,000	SRH109AE	HCM109T4LC6	120U0366	460 / 3
ZR12**-***-***	10-1/2	125,500	HCM120-***-**	120,000	SRY120AE	HCM120T2LC6	120U0761	230 / 3
ZR12**-***-***	10-1/2	125,500	HCM120-***-**	120,000	SRH120AE	HCM120T4LC6	120U0391	460 / 3

© Danfoss Inc. 01-07 (USCO)

Cross Reference - R-410A								
Copeland	Tons	Btu/h	Scroll Tech	Btu/h	Old ST Model #	Model #	Code #	Voltage
ZP29***-***-***	2-1/2	29,000	HRH031-***-**	31,000	XGD310HA	HRH031U1LP6	120U1136	230 / 1
ZP29***-***-***	2-1/2	29,000	HRH031-***-**	31,000	XGY312HA	HRH031U2LP6	120U1251	230 / 3
ZP29***-***-***	2-1/2	29,000	HRH031-***-**	31,000	XGH312HA	HRH031U4LP6	120U1191	460 / 3
ZP31***-***-***	2-1/2	31,100	HRH031-***-**	31,000	XGD310HA	HRH031U1LP6	120U1136	230 / 1
ZP31***-***-***	2-1/2	31,100	HRH031-***-**	31,000	XGY312HA	HRH031U2LP6	120U1251	230 / 3
ZP31***-***-***	2-1/2	31,100	HRH031-***-**	31,000	XGH312HA	HRH031U4LP6	120U1191	460 / 3
ZP32***-***-***	2-3/4	31,800	HRH032-***-**	32,000	XGD320HA	HRH032U1LP6	120U1141	230 / 1
ZP32***-***-***	3	31,800	HRH032-***-**	32,000	XGY322HA	HRH032U2LP6	120U1256	230 / 3
ZP32***-***-***	3	31,800	HRH032-***-**	32,000	XGH322HA	HRH032U4LP6	120U1196	460 / 3
ZP34***-***-***	3	34,500	HRH034-***-**	34,000	XGD340HA	HRH034U1LP6	120U1146	230 / 1
ZP34***-***-***	3	34,500	HRH034-***-**	34,000	XGY342HA	HRH034U2LP6	120U1261	230 / 3
ZP36***-***-***	3	36,000	HRH036-***-**	36,000	XGD360HA	HRH036U1LP6	120U1151	230 / 1
ZP36***-***-***	3-1/4	36,000	HRH036-***-**	36,000	XGY362HA	HRH036U2LP6	120U1266	230 / 3
ZP36***-***-***	3-1/2	36,000	HRH036-***-**	36,000	XGH362HA	HRH036U4LP6	120U1201	460 / 3
ZP38***-***-***	3-1/4	37,600	HRH038-***-**	38,000	XGD380HA	HRH038U1LP6	120U1156	230 / 1
ZP38***-***-***	3-1/2	37,600	HRH038-***-**	38,000	XGY382HA	HRH038U2LP6	120U1271	230 / 3
ZP38***-***-***	4	37,600	HRH038-***-**	38,000	XGH382HA	HRH038U4LP6	120U1206	460 / 3
ZP39***-***-***	3-1/4	39,000	HRH040-***-**	40,000	XGD410HA	HRH040U1LP6	120U1161	230 / 1
ZP39***-***-***	3-1/2	39,000	HRH040-***-**	40,000	XGY412HA	HRH040U2LP6	120U1276	230 / 3
ZP39***-***-***	4	39,000	HRH040-***-**	40,000	XGH412HA	HRH040U4LP6	120U1211	460 / 3
ZP41***-***-***	3-1/2	41,000	HRH040-***-**	40,000	XGD410HA	HRH040U1LP6	120U1161	230 / 1
ZP41***-***-***	4	41,000	HRH040-***-**	40,000	XGY412HA	HRH040U2LP6	120U1276	230 / 3
ZP41***-***-***	5	41,000	HRH040-***-**	40,000	XGH412HA	HRH040U4LP6	120U1211	460 / 3
ZP42***-***-***	3-1/2	42,000	HRH040-***-**	40,000	XGD410HA	HRH040U1LP6	120U1161	230 / 1
ZP42***-***-***	4	42,000	HRH040-***-**	40,000	XGY412HA	HRH040U2LP6	120U1276	230 / 3
ZP42***-***-***	5	42,000	HRH040-***-**	40,000	XGH412HA	HRH040U4LP6	120U1211	460 / 3
ZP44***-***-***	3-1/2	44,300	HRH044-***-**	44,000	XND440HA	HRH044U1LP6	120U1286	230 / 1
ZP44***-***-***	4	44,300	HRH044-***-**	44,000	XNY442HA	HRH044U2LP6	120U1456	230 / 3
ZP44***-***-***	5	44,300	HRH044-***-**	44,000	XNH442HA	HRH044U4LP6	120U1361	460 / 3
ZP50***-***-***	4-1/2	50,500	HRH051-***-**	51,000	XND510HA	HRH051U1LP6	120U1296	230 / 1
ZP50***-***-***	4-1/2	50,500	HRH051-***-**	51,000	XNY512HA	HRH051U2LP6	120U1466	230 / 3
ZP50***-***-***	4-1/2	50,500	HRH051-***-**	51,000	XNH512HA	HRH051U4LP6	120U1371	460 / 3
ZP51***-***-***	4-1/2	51,000	HRH051-***-**	51,000	XND510HA	HRH051U1LP6	120U1296	230 / 1
ZP51***-***-***	4-1/2	51,000	HRH051-***-**	51,000	XNY512HA	HRH051U2LP6	120U1466	230 / 3
ZP51***-***-***	4-1/2	51,000	HRH051-***-**	51,000	XNH512HA	HRH051U4LP6	120U1371	460 / 3
ZP54***-***-***	5	54,500	HRH054-***-**	54,000	XND540HA	HRH054U1LP6	120U1301	230 / 1
ZP54***-***-***	4-3/4	54,500	HRH054-***-**	54,000	XNY542HA	HRH054U2LP6	120U1471	230 / 3
ZP54***-***-***	5	54,500	HRH054-***-**	54,000	XNH542HA	HRH054U4LP6	120U1376	460 / 3
ZP57***-***-***	4-3/4	58,000	HRH056-***-**	56,000	XND560HA	HRH056U1LP6	120U1306	230 / 1
ZP57***-***-***	5	58,000	HRH056-***-**	56,000	XNY562HA	HRH056U2LP6	120U1476	230 / 3
ZP57***-***-***	5-1/2	58,000	HRH056-***-**	56,000	XNH562HE	HRH056U4LC6	120U1386	460 / 3
ZP67***-***-***	5-1/2	67,500	HLH068-***-**	68,000	XND680AA	HLH068T1LP6	120U1311	230 / 1
ZP67***-***-***	6	67,500	HLH068-***-**	68,000	XNY682AE	HLH068T2LC6	120U1481	230 / 3
ZP67***-***-***	6	67,500	HLH068-***-**	68,000	XNH682AE	HLH068T4LC6	120U1391	460 / 3
ZP72***-***-***	6	72,000	HLJ072-***-**	72,000	XND720AA	HLJ072T1LP6	120U1316	230 / 1
ZP72***-***-***	6	72,000	HLJ072-***-**	72,000	XNY722AE	HLJ072T2LC6	120U1486	230 / 3
ZP72***-***-***	7	72,000	HLJ072-***-**	72,000	XNH722AE	HLJ072T4LC6	120U1396	460 / 3
ZP83***-***-***	7	83,000	HLJ083-***-**	83,000	XND830AA	HLJ083T1LP6	120U1321	230 / 1
ZP83***-***-***	7-1/2	83,000	HLJ083-***-**	83,000	XNY832AE	HLJ083T2LC6	120U1491	230 / 3
ZP83***-***-***	7-1/2	83,000	HLJ083-***-**	83,000	XNH832AE	HLJ083T4LC6	120U1401	460 / 3
ZP83***-***-***	7-1/2	83,000	HLJ083-***-**	83,000	XNJ832AE	HLJ083T7LC6	120U1441	575 / 3

Introduction

The optimum choice in condensing units–Danfoss condensing units offer a complete range, from $^1/_6$ to 13 $^1/_2$ hp, based on Danfoss Dependable hermetic compressors. This optimum range is durable and compact, with components and construction that ensure extended lifetime reliability. A wider operating envelope delivers optimum performance even at higher ambient conditions.

Optimum range and optimum reliability are matched by optimum support. And Danfoss has an authorized wholesaler network and local sales representatives to assist with product selection. The new Danfoss condensing units are easy to select, install and maintain.

Features

Condenser designer for dependable performance in the toughest of high ambient conditions

Complete line from $^1/_6$ to 13 $^1/_2$

Units available fro R134a, R22, R404A, and R12 replacement refrigerants

Easy access service valves on all units

Universal High/Medium/Low range in R-404A fractional units

Compact design

100% factory tested

Condensing Unit Nomenclature

1. Application
2. Design
3. Refrigerant
4. Condenser size
5. hp rating
6. Certification
7. Version
8. Electrical code

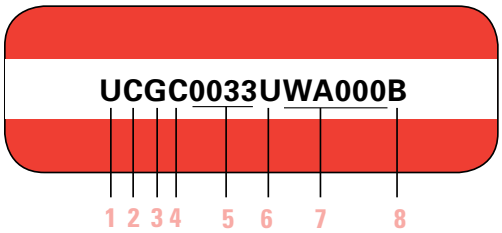

Low	1	L
Medium/High		H
Universal Low/Med/High		U

C: Air cooled condenser, single fan, hermetic compressor	2
G: Air cooled condenser, dual fan, hermetic compressor	

R12 replacement	3	B
R134a		G
R404A/R507		H
R22		M
R404A/R134a/R507/R407C		Z

Condenser size - sized for 110°F ambient	4

hp rating in hundreths of hp - i.e. 0033 = 1/3 hp 1000 = 10 hp	5

R: UL Recognized	6
U: UL Listed	

W	=	Wholesale model
A	=	Power cord
B	=	Power cord, receiver
C	=	BX, receiver
D	=	BX, receiver, low pressure control, cartridge fan cycling control
E	=	BX, receiver, dual pressure control, cartridge fan cycling control, larger then 3 hp dual fan units use KPU fan cycling control
F	=	WE + filter drier, sight glass, solenoid valve with coil
Fan Motor Version		
000	=	Standard unit
300	=	Complies with California standards

7

B: Compressor & fan(s) 115V, 1 ph, 60 Hz	8
N: Compressor & fan(s) 230V, 1 ph, 60 Hz	
Q: Compressor 208-230V, 3 ph, 60 Hz; Fan(s) 230V, 1 ph, 60 Hz	
R: Compressor 460V, 3 ph, 60 Hz; Fan(s) 460V, 1 ph, 60 Hz	
X: Compressor 575V, 3 ph, 6, 0 Hz; Fan(s) 575V, 1 ph, 60 Hz	

Rating Conditions (ARI)		
Application	LBP	MBP/HBP
Ambient Temp	90°F	90°F
Return Gas	40°F	65°F
SubCooling	5°F	5°F

© Danfoss Inc. 01-07 (USCO)

Condensing Unit for R12 Replacement High/Medium Temperature Capacities

Model #	Compressor Model	hp	Available Versions*	Capacity (BTU/hr) @ 90°F ambient, at the rated ARI conditions										
				°F	0	5	10	15	20	25	30	35	40	45
				°C	-17.8	-15.0	-12.2	-9.4	-6.7	-3.9	-1.1	1.7	4.4	7.2
UCBC0017RW*****	TFS4.5AT	1/6	A		587	684	780	889	998	1,121	1,243	1,378	1,514	1,661
UCBC0020RW*****	NF6AK	1/5	A		1,001	1,138	1,275	1,433	1,591	1,771	1,950	2,151	2,352	2,569
UCBC0025RW*****	NF9AK	1/4	A,B		1,258	1,422	1,585	1,770	1,956	2,161	2,367	2,591	2,815	3,018
UCBC0033RW*****	SC12B	1/3	A,B,C		1,186	1,372	1,558	1,770	1,983	2,221	2,460	2,722	2,984	3,263
UCBC0045RW*****	SC15B	1/3 +	B,C		1,916	2,196	2,477	2,796	3,116	3,476	3,837	4,238	4,639	5,068
HCBC0050RW*****	T6213A	1/2	B,C			2,570	2,881	3,289	3,696	4,164	4,633	5,131	5,629	6,130
HCBC0055RW*****	T6215A	1/2 +	B,C			3,671	4,116	4,698	5,279	5,949	6,618	7,330	8,041	8,757
HCBC0075RW*****	J6220A	3/4	C			4,634	5,121	5,822	6,524	7,386	8,249	9,205	10,161	11,145
HCBC0100RW*****	J6226A	1	D			6,551	7,126	7,724	8,322	9,102	9,881	10,899	11,917	13,117

Condensing Unit R134a High/Medium Temperature Capacities

Model #	Compressor Model	hp	Availables versions*	Capacity (BTU/hr) @ 90°F ambient, rated at ARI conditions										
				°F	0	5	10	15	20	25	30	35	40	45
				°C	-17.8	-15.0	-12.2	-9.4	-6.7	-3.9	-1.1	1.7	4.4	7.2
UCGC0017RW*****	TL4G	1/6	A		527	614	701	799	897	1,007	1,117	1,239	1,361	1,492
UCGC0020RW*****	NF6.1FX.2	1/5	A		1,052	1,196	1,339	1,505	1,671	1,860	2,049	2,260	2,472	2,699
UCGC0025RW*****	NF7.3FX.2	1/4	A,B		1,193	1,353	1,514	1,699	1,884	2,095	2,306	2,541	2,776	3,029
HCGC0033RW*****	NF11FX	1/3	A,B,C		1,492	1,709	1,927	2,179	2,431	2,717	3,004	3,324	3,644	3,986
UCGC0050RW*****	SC18G	1/2	B,C		2,339	2,682	3,025	3,420	3,815	4,264	4,713	5,212	5,712	6,249
HCGC0055RW*****	T6215Z1	1/2+	B,C			3,091	3,466	3,956	4,446	5,009	5,573	6,172	6,771	7,374
HCGC0075RW*****	J6220Z	3/4	C			4,596	5,079	5,774	6,470	7,325	8,180	9,129	10,077	11,052
HCGC0100RW*****	J6226Z	1	D			6,848	7,448	8,192	8,936	9,785	10,634	11,553	12,471	13,417

Condensing Unit R22 High/Medium Temperature Capacities

Model #	Compressor Model	hp	Availables versions*	R22 Capacity (BTU/hr) @ 90°F ambient, rated at ARI conditions										
				°F	0	5	10	15	20	25	30	35	40	45
				°C	-17.8	-15.0	-12.2	-9.4	-6.7	-3.9	-1.1	1.7	4.4	7.2
HCMC0025RW*****	NE6181E	1/4	A,B			1,959	2,174	2,440	2,705	3,009	3,313	3,644	3,975	4,320
HCMC0033RW*****	NE6210E	1/3	A,B,C			2,334	2,590	2,886	3,182	3,509	3,837	4,187	4,537	4,898
HCMC0050RW*****	NE9213E	1/2	B,C			3,322	3,682	4,117	4,553	5,044	5,535	6,061	6,587	7,129
HCMC0060RW*****	T6217E	5/8	B,C			3,145	3,736	4,331	4,925	5,516	6,108	6,690	7,273	7,846
HCMC0075RW*****	T6220E	3/4	C			3,863	4,603	5,275	5,947	6,600	7,252	7,917	8,583	9,279
HCMC0100RW*****	T6222E	1	D			4,812	5,333	5,932	6,531	7,210	7,890	8,653	9,417	10,247
HCMC0150UW****	MT18	1 1/2	E, F		4,805	5,810	6,815	8,035	9,255	10,707	12,159	13,787	15,518	17,432
HGMC0200UW****	MT22	2	E, F		7,460	8,919	10,378	12,042	13,705	15,575	17,444	19,468	21,581	23,848
HCMC0225UW****	MT28	2 1/4	E, F		10,824	12,557	14,289	16,210	18,131	20,243	22,355	24,596	26,926	29,352
HCMC0275UW****	MT36	2 3/4	E, F		13,477	15,495	17,513	19,711	21,909	24,270	26,631	29,077	31,572	34,127
HCMC0300UW****	MT40	3	E, F		14,865	17,222	19,578	22,225	24,871	27,827	30,783	33,990	37,316	40,861
HGMC0400UW****	MT50	4	E, F		17,905	20,868	23,832	27,120	30,409	34,069	37,730	41,686	45,823	50,282
HGMC0500UW****	MT64	5	E, F		24,237	27,665	31,093	35,054	39,016	43,503	47,990	52,867	57,998	63,425
HGMC0700UW****	MT80	7	E, F		30,010	34,312	38,614	43,622	48,630	54,327	60,024	66,208	72,610	79,392
HGMC0900UW****	MT100	9	E, F		36,271	42,255	48,240	55,346	62,451	70,789	79,127	88,392	98,310	109,250
HGMC1000UW****	MT125	10	E, F		47,314	54,823	62,334	71,115	79,895	90,002	100,109	111,258	123,041	135,855
HGMC1200UW****	MT144	12	E, F		53,238	61,508	69,778	79,429	89,079	100,199	111,318	123,538	136,389	150,380
HGMC1350UW****	MT160	13 1/2	E, F	58418	58,418	67,360	76,302	86,712	97,121	109,115	121,108	134,212	148,062	163,039

*Please see Condensing Unit Nomenclature for version definitions and rating conditions.

Condensing Units for R12 Replacement High/Medium Temperature Dimensions and Specifications

Model #	hp	PORTS			Width (in)	Depth (in)	Height (in)	Mounting holes (in)		Weight (lbs)	Receiver lbs @ 90%	Figure	OIL		MCA values for electrical code					Outdoor Enclosure
		Suction	Process	Liquid				A	B				Type	Charge (oz)	B	N	Q	R	X	
															115V	230V(1)	220V(3)	460V(3)	575V(3)	
UCBC0017RW*****	1/6	1/4″ F	1/4″ F	1/4″ F	11.0	14.0	9.1	8.7	9.5	26	----	1	ALKYLBENZENE	9	4.1	----	----	----	----	E1
UCBC0020RW*****	1/5	3/8″ F	1/4″ F	1/4″ F	11.1	14.0	9.1	8.7	9.5	36	----	1	ALKYLBENZENE	11	6.1	----	----	----	----	E1
UCBC0025RW*****	1/4	3/8″ F	1/4″ F	1/4″ F	11.1	14.0	9.1	10.6	12.2	38	2.2	1	ALKYLBENZENE	11	6.4	----	----	----	----	E1
UCBC0033RW*****	1/3	3/8″ F	1/4″ F	1/4″ F	12.4	14.0	10.2	10.6	12.2	39	2.2	1	ALKYLBENZENE	11	11.2	----	----	----	----	E1
UCBC0045RW*****	1/3 +	3/8″ F	1/4″ F	1/4″ F	13.3	17.0	11.8	10.6	12.2	53	2.2	1	ALKYLBENZENE	20	13.4	----	----	----	----	E1
HCBC0050RW*****	1/2	3/8″ F	1/4″ F	1/4″ F	13.3	18.0	11.8	10.6	12.2	53	2.2	1	ALKYLBENZENE	20	15.4	----	----	----	----	E2
HCBC0055RW*****	1/2 +	3/8″ F	1/4″ F	1/4″ F	16.9	19.0	13.4	9.3	14.8	56	2.2	1	ALKYLBENZENE	20	19.3	----	----	----	----	E2
HCBC0075RW*****	3/4	3/8″ F	1/4″ F	1/4″ F	19.0	21.0	16.2	10.6	20.0	85	4.0	1	ALKYLBENZENE	30	19.3	10.5	----	----	----	E2
HCBC0100RW*****	1	3/8″ F	1/4″ F	1/4″ F	19.0	21.0	16.2	10.6	20.0	97	4.0	1	ALKYLBENZENE	30	---	11.3	----	----	----	E2

Condensing Unit R134a High/Medium Temperature Dimensions and Specifications

Model #	hp	PORTS			Width (in)	Depth (in)	Height (in)	Mounting holes (in)		Weight (lbs)	Receiver lbs @ 90%	Figure	OIL		MCA values for electrical code					Outdoor enclosure
		Suction	Process	Liquid				A	B				Type	Charge (oz)	B	N	Q	R	X	
															115V	230V(1)	220V(3)	460V(3)	575V(3)	
UCGC0017RW*****	1/6	1/4″ F	1/4″F	1/4″ S	11	14	9.1	8.7	9.5	26	----	1	POE	9.5	4.1	----	----	----	----	E1
UCGC0020RW*****	1/5	5/16″ S	1/4″ F	1/4″ S	11.1	14	9.1	8.7	9.5	36	----	1	POE	10.8	6.1	----	----	----	----	E1
UCGC0025RW*****	1/4	5/16″ S	1/4″ F	1/4″ S	13	17	9.1	10.6	12.2	38	2.16	1	POE	10.8	6.4	----	----	----	----	E1
HCGC0033RW*****	1/3	5/16″ S	1/4″ F	1/4″ S	13	17	10.2	10.6	12.2	39	2.16	1	POE	10.8	11.7	----	----	----	----	E1
UCGC0050RW*****	1/2	3/8″ S	1/4″ F	1/4″ S	13.3	17	11.8	10.6	12.2	53	2.16	1	POE	20.3	13.4	----	----	----	----	E1
HCGC0055RW*****	1/2+	3/8″ S	1/4″ F	1/4″ S	13.3	18	11.8	10.6	12.2	57	4	1	POE	19.6	15.4	----	----	----	----	E1
HCGC0075RW*****	3/4	3/8″ S	1/4″ F	1/4″ S	16.9	19	13.4	9.3	14.8	85	4	1	POE	30.1	19.3	10.5	----	----	----	E2
HCGC0100RW*****	1	3/8″ S	1/4″ F	1/4″ S	19	21	16.2	10.6	20.0	97	4	1	POE	30.1	11	----	----	----	----	E2

Condensing Unit R22 High/Medium Temperature Dimensions and Specifications

Model #	hp	PORTS			Width (in)	Depth (in)	Height (in)	Mounting holes (in)		Weight (lbs)	Receiver lbs @ 90%	Figure	OIL		MCA values for electrical code					Outdoor enclosure
		Suction	Process	Liquid				A	B				Type	Charge (oz)	B	N	Q	R	X	
															115V	230V(1)	220V(3)	460V(3)	575V(3)	
HCMC0025RW*****	1/4	5/16″ S	1/4″ F	1/4″ S	13	17	10.2	10.6	12.2	40	2.16	1	ALKYLBENZENE	11.8	6.2	----	----	----	----	E1
HCMC0033RW*****	1/3	5/16″ S	1/4″ F	1/4″ S	13	17	10.2	10.6	12.2	41	2.16	1	ALKYLBENZENE	11.8	7.6	----	----	----	----	E1
HCMC0050RW*****	1/2	5/16″ S	1/4″ F	1/4″ S	13.3	17	11.8	10.6	12.2	47	2.16	1	ALKYLBENZENE	11.8	10.8	5.3	----	----	----	E1
HCMC0060RW*****	5/8	3/8″ S	1/4″ F	1/4″ S	13.3	18	11.8	10.6	12.2	57	4	1	ALKYLBENZENE	19.6	17.2	8.5	----	----	----	E2
HCMC0075RW*****	3/4	3/8″ S	1/4″ F	1/4″ S	16.9	19	14	9.3	14.8	64	4	1	ALKYLBENZENE	19.6	16.4	8.1	----	----	----	E2
HCMC0100RW*****	1	3/8″ S	1/4″ F	1/4″ S	16.9	19	14	9.3	14.8	67	4	1	ALKYLBENZENE	19.6	----	9.5	----	----	----	E2
HCMC0150UW****	1 1/2	1/2″ S	1/4″ F	3/8″ S	19.6	24.8	16.1	16.5	16.0	130	10	1	MINERAL	28.7	----	14	9	6	----	E2
HGMC0200UW****	2	1/2″ S	1/4″ F	3/8″ S	19.6	24.8	16.1	16.5	16.0	140	10	1	MINERAL	28.7	----	17	11	6	5	E2
HCMC0225UW****	2 1/4	5/8″ S	1/4″ F	3/8″ S	27.6	19.7	17.4	11.8	26.0	140	10	2	MINERAL	28.7	----	24	16	8	6	E3
HCMC0275UW****	2 3/4	5/8″ S	1/4″ F	3/8″ S	27.6	19.7	17.4	11.8	26.0	180	10	2	MINERAL	28.7	----	28	17	9	7	E3
HCMC0300UW****	3	5/8″ S	1/4″ F	3/8″ S	27.6	19.7	17.4	11.8	26.0	180	17.5	2	MINERAL	28.7	----	40	23	12	10	E3
HGMC0400UW****	4	7/8″ S	1/4″ F	1/2″ S	39.4	27.6	22	18.1	37.8	210	26	3	MINERAL	62.6	----	36	24	12	10	E4
HGMC0500UW****	5	7/8″ S	1/4″ F	1/2″ S	47.2	31.5	26.4	19.7	45.7	300	26	3	MINERAL	62.6	----	52	32	16	----	E5
HGMC0700UW****	7	1 1/8″ S	1/4″ F	1/2″ S	47.2	31.5	26.4	19.7	45.7	300	26	3	MINERAL	62.6	----	----	40	17	----	E5
HGMC0900UW****	9	1 1/8″ S	1/4″ F	5/8″ S	59.1	34.3	34	22.4	56.7	500	36	3	MINERAL	131.9	----	----	50	26	21	E6
HGMC1000UW****	10	1 1/8″ S	1/4″ F	5/8″ S	59.1	34.3	34	22.4	56.7	500	36	3	MINERAL	131.9	----	----	60	30	24	E6
HGMC1200UW****	12	1 1/8″ S	1/4″ F	5/8″ S	59.1	34.3	34	22.4	56.7	510	43	3	MINERAL	131.9	----	----	69	33	26	E6
HGMC1350UW****	13 1/2	1 1/8″ S	1/4″ F	5/8″ S	59.1	34.3	34	22.4	56.7	540	43	3	MINERAL	131.9	----	----	75	38	31	E6

© Danfoss Inc. 01-07 (USCO)

Condensing Unit R404A High/Medium Temperature Capacities

Model #	Compressor Model	hp	Availables versions*	R404A Capacity (BTU/hr) @ 90°F ambient, rated at ARI conditions										
				°F	0	5	10	15	20	25	30	35	40	45
				°C	-17.8	-15.0	-12.2	-9.4	-6.7	-3.9	-1.1	1.7	4.4	7.2
UCHC0020RW*****	TF4CLX	1/5	A		961	1071	1181	1301	1422	1552	1682	1819	1956	2098
UCHC0025RW*****	NF5.5CLX	1/4	A,B		1,625	1,808	1,992	2,198	2,405	2,634	2,864	3,115	3,367	3,635
UCHC0033RW*****	NF7CLX	1/3	A,B,C		1,971	2,194	2,417	2,666	2,915	3,188	3,461	3,756	4,052	4,340
UCHC0050RW*****	SC10CL	1/2	B,C		2,519	2,838	3,158	3,518	3,878	4,279	4,679	5,119	5,560	6,030
HCHC0060RW*****	SC12MLX	5/8	B,C			3,648	4,035	4,480	4,925	5,427	5,928	6,484	7,039	7,634
HCHC0075RW*****	SC18MLX	3/4	C			5,235	5,768	6,383	6,998	7,693	8,388	9,159	9,931	10,759
HCHC0100RW*****	T6222GK	1	D			6,156	6,880	7,604	8,327	9,042	9,757	10,454	11,150	11,829
HCZC0150UW****	MTZ18	1 1/2	E, F		5,653	6,729	7,806	9,004	10,202	11,535	14,374	14,374	15,859	17,484
HGZC0200UW****	MTZ22	2	E, F		8,522	9,930	11,338	12,941	14,543	16,344	18,227	20,253	22,278	24,528
HCZC0225UW****	MTZ28	2 1/4	E, F		11,258	12,870	14,483	16,253	18,023	19,974	21,992	24,108	26,223	28,532
HCZC0275UW****	MTZ36	2 3/4	E, F		13,317	15,265	17,213	19,325	21,436	23,728	26,098	28,531	30,963	33,558
HCZC0300UW****	MTZ40	3	E, F		15,374	17,591	19,808	22,204	24,600	27,206	29,855	32,611	35,366	38,283
HGZC0400UW****	MTZ50	4	E, F		20,074	23,089	26,103	29,451	32,798	36,521	40,377	44,475	48,573	53,103
HGZC0500UW****	MTZ64	5	E, F		25,329	29,023	32,717	36,783	40,850	45,339	49,965	54,810	59,725	64,640
HGZC0700UW****	MTZ80	7	E, F		32,645	37,020	41,395	46,220	51,046	56,330	61,824	67,524	73,379	79,234
HGZC0900UW****	MTZ100	9	E, F		42,317	48,984	55,651	63,271	70,891	79,528	88,902	98,276	108,411	118,590
HGZC1000UW*****	MTZ125	10	E, F		50,572	57,395	64,218	71,795	79,372	87,743	96,495	105,668	115,042	133,677
HGZC1200UW*****	MTZ144	12	E, F		58,238	65,784	73,330	81,645	89,960	99,106	108,643	118,562	128,799	150,707
HGZC1350UW*****	MTZ160	13 1/2	E, F		62,293	70,102	77,911	86,496	95,082	104,476	114,193	124,446	134,767	160,773

Condensing Unit R404A Low Temperature Capacities

Model #	Compressor Model	hp	Availables versions*	R404A Capacity (BTU/hr) @ 90°F ambient, rated at ARI conditions										
				°F	-40	-35	-30	-25	-20	-15	-10	-5	0	5	10
				°C	-40.0	-37.2	-34.4	-31.7	-28.9	-26.1	-23.3	-20.6	-17.8	-15.0	-12.2
UCHC0020RW*****	TF4CLX	1/5	A		327	387	447	520	593	679	764	862	961	1071	1181
UCHC0025RW*****	NF5.5CLX	1/4	A,B		595	693	791	909	1,026	1,165	1,303	1,464	1,625	1,808	1,992
UCHC0033RW*****	NF7CLX	1/3	A,B,C		699	821	944	1,090	1,235	1,406	1,577	1,774	1,971	2,194	2,417
UCHC0050RW*****	SC10CL	1/2	B,C		710	885	1,060	1,267	1,474	1,716	1,959	2,239	2,519	2,838	3,158
LCHC0060RW*****	SC15CLX.2	5/8	B,C		1,274	1,511	1,748	2,025	2,303	2,622	2,941	3,299	3,658	4,054	4,450
LCHC0075RW*****	T2178GK	3/4	C		1,380	1,688	1,996	2,341	2,686	3,073	3,460	3,891	4,322	4,797	5,272
LCHC0100RW*****	J2192GK	1	D		1,779	2,347	2,915	3,504	4,093	4,711	5,329	5,980	6,630	7,314	7,998
LCHC0150UW****	LTZ22	1 1/2	E, F				3,651	4,380	5,110	5,911	6,768	7,625	8,562	9,499	10,565
LCHC0200UW****	LTZ28	2	E, F				5,231	6,042	6,852	7,768	8,770	9,772	10,893	12,015	13,299
LCHC0300UW****	LTZ44	3	E, F				8,231	9,810	11,389	13,089	14,844	16,599	18,399	20,199	20,606
LGHC0400UW****	LTZ50	4	E, F				11,218	13,271	15,326	17,583	19,984	22,385			
LGHC0600UW****	LTZ88	6	E, F				17,247	20,270	23,290	26,663	30,306	33,950			
LGHC0750UW****	LTZ100	7 1/2	E, F				22,340	26,204	30,068	34,154	38,282	42,410			

*Please see Condensing Unit Nomenclature for version definitions and rating conditions.

Condensing Unit R404A High/Medium Temperature Dimensions and Specifications

Model #	hp	PORTS			Width (in)	Depth (in)	Height (in)	Mounting holes (in)		Weight (lbs)	Receiver lbs @ 90%	Figure	OIL		MCA values for electrical code					Outdoor enclosure
		Suction	Process	Liquid				A	B				Type	Charge (oz)	B 115V	N 230V (1)	Q 220V (3)	R 460V (3)	X 575V (3)	
UCHC0020RW*****	1/5	1/4″ F	1/4″F	1/4″ S	12.4	14	10.2	8.7	9.5	32	----	1	POE	9.5	5.1	----	----	----	----	E1
UCHC0025RW*****	1/4	5/16″ S	1/4″ F	1/4″ S	13	17	10.2	10.6	12.2	41	2.16	1	POE	10.8	6.2	----	----	----	----	E1
UCHC0033RW*****	1/3	5/16″ S	1/4″ F	1/4″ S	13	17	10.2	10.6	12.2	39	2.16	1	POE	10.8	7.6	----	----	----	----	E1
UCHC0050RW*****	1/2	5/16″ S	1/4″ F	1/4″ S	13.3	17	11.8	10.6	12.2	49	2.16	1	POE	18.6	11.6	4.2	----	----	----	E1
HCHC0060RW*****	5/8	5/16″ S	1/4″ F	1/4″ S	16.2	19	14	9.3	14.8	59	2.16	1	POE	20.3	14.2	7.1	----	----	----	E2
HCHC0075RW*****	3/4	3/8″ S	1/4″ F	1/4″ S	16.9	19	13.4	9.3	14.8	76	4	1	POE	20.3	23.3	9.4	----	----	----	E2
HCHC0100RW*****	1	3/8″ S	1/4″ F	1/4″ S	16.9	19	13.4	9.3	14.8	77	4	1	POE	19.6	----	10.9	----	----	----	E2
HCZC0150UW****	1 1/2	1/2″ S	1/4″ F	3/8″ S	19.6	24.8	16.1	16.5	16.0	130	10	1	POE	28.7	----	14	9	6	----	E2
HGZC0200UW****	2	1/2″ S	1/4″ F	3/8″ S	19.6	24.8	16.1	16.5	16.0	140	10	1	POE	28.7	----	17	11	6	5	E2
HCZC0225UW****	2 1/4	5/8″ S	1/4″ F	3/8″ S	27.6	19.7	17.4	11.8	26.0	140	10	2	POE	28.7	----	24	16	8	6	E3
HCZC0275UW****	2 3/4	5/8″ S	1/4″ F	3/8″ S	27.6	19.7	17.4	11.8	26.0	28	10	2	POE	28.7	----	28	17	9	7	E3
HCZC0300UW****	3	5/8″ S	1/4″ F	3/8″ S	27.6	19.7	17.4	11.8	26.0	28	17.5	2	POE	28.7	----	40	23	12	10	E4
HGZC0400UW****	4	7/8″ S	1/4″ F	1/2″ S	39.4	27.6	22	18.1	37.8	210	26	3	POE	62.6	----	36	24	12	10	E5
HGZC0500UW****	5	7/8″ S	1/4″ F	1/2″ S	47.2	31.5	26.4	19.7	45.7	300	26	3	POE	62.6	----	52	32	16	----	E5
HGZC0700UW****	7	1 1/8″ S	1/4″ F	1/2″ S	47.2	31.5	26.4	19.7	45.7	300	26	3	POE	62.6	----	----	40	17	----	E5
HGZC0900UW****	9	1 1/8″ S	1/4″ F	5/8″ S	59.1	34.3	34	22.4	56.7	500	36	3	POE	131.9	----	----	50	26	21	E6
HGZC1000UW*****	10	1 1/8″ S	1/4″ F	5/8″ S	59.1	34.3	34	22.4	56.7	500	36	3	POE	131.9	----	----	60	30	24	E6
HGZC1200UW*****	12	1 1/8″ S	1/4″ F	5/8″ S	59.1	34.3	34	22.4	56.7	510	43	3	POE	131.9	----	----	69	33	26	E6
HGZC1350UW*****	13 1/2	1 1/8″ S	1/4″ F	5/8″ S	59.1	34.3	34	22.4	56.7	540	43	3	POE	131.9	----	----	75	38	31	E6

Condensing Unit R404A Low Temperature Dimensions and Specifications

Model #	hp	PORTS			Width (in)	Depth (in)	Height (in)	Mounting holes (in)		Weight (lbs)	Receiver lbs @ 90%	Figure	OIL		MCA values for electrical code					Outdoor enclosure
		Suction	Process	Liquid				A	B				Type	Charge (oz)	B 115V	N 230V (1)	Q 220V (3)	R 460V (3)	X 575V (3)	
UCHC0020RW*****	1/5	1/4″ F	1/4″F	1/4″ S	12.4	14	10.2	8.7	9.5	32	----	1	POE	9.5	5.1	----	----	----	----	E1
UCHC0025RW*****	1/4	5/16″ S	1/4″ F	1/4″ S	13	17	10.2	10.6	12.2	41	2.16	1	POE	10.8	6.2	----	----	----	----	E1
UCHC0033RW*****	1/3	5/16″ S	1/4″ F	1/4″ S	13	17	10.2	10.6	12.2	39	2.16	1	POE	10.8	7.6	----	----	----	----	E1
UCHC0050RW*****	1/2	5/16″ S	1/4″ F	1/4″ S	13.3	17	11.8	10.6	12.2	49	2.16	1	POE	18.6	11.6	4.2	----	----	----	E1
LCHC0060RW*****	5/8	3/8″ S	1/4″ F	1/4″ S	13.3	17	11.8	10.6	12.2	48	2.2	1	POE	18.6	13.9	6.3	----	----	----	E1
LCHC0075RW*****	3/4	3/8″ S	1/4″ F	1/4″ S	13.3	18	11.8	10.6	12.2	63	4	1	POE	19.6	11.9	5.5	----	----	----	E2
LCHC0100RW*****	1	3/8″ S	1/4″ F	1/4″ S	16.9	19	13.4	9.3	14.8	90	4	1	POE	30.1	----	8.0	----	----	----	E2
LCHC0150UW****	1 1/2	1/2″ S	1/4″ F	3/8″ S	19.6	24.8	16.1	16.5	16.0	130	10	1	POE	28.7	----	18	11	5	4	E2
LCHC0200UW****	2	5/8″ S	1/4″ F	3/8″ S	19.6	24.8	16.1	16.5	16.0	130	10	1	POE	28.7	----	24	19	6	4	E3
LCHC0300UW****	3	7/8″ S	1/4″ F	1/2″ S	27	27.5	17.4	19.1	25.4	150	10	2	POE	62.6	----	32	21	10	8	E4
LGHC0400UW****	4	7/8″ S	1/4″ F	1/2″ S	39.4	27.6	22	18.1	37.8	210	17.5	3	POE	62.6	----	36	78	12	10	E4
LGHC0600UW****	6	1 1/8″ S	1/4″ F	1/2″ S	47.2	31.5	26.6	19.7	45.7	300	26	3	POE	131.9	----	----	43	17	14	E5
LGHC0750UW****	7 1/2	1 1/8″ S	1/4″ F	1/2″ S	47.2	31.5	26.6	19.7	45.7	300	26	3	POE	131.9	----	----	53	22	18	E5

© Danfoss Inc. 01-07 (USCO)

Outdoor enclosures

Lightweight, corrosive resistant enclosures are available for Danfoss Optyma Condensing Units in six different configurations to protect your unit from the elements when used in outdoor applications.

- Innovative design for quick and easy assembly
- Stretch connectors for easy service access, assembly and disassembly - no screws to lose!
- Durable, sturdy 16 gauge galvanized steel
- 6 models available to protect units up to 13½ hp

Model No.	Code No.	Width in.	Depth in.	Height in.	Range
E1	119-6040	22	18	15	1/6 - 5/8 hp
E2	119-6041	22	26	19	5/8 - 2 hp
E3	119-6042	29	29	19	2 1/2 - 3 hp

Model No.	Code No.	Width in.	Depth in.	Height in.	Range
E4	119-6043	42	30	23	4 hp
E5	119-6044	48	33	27	5 -7 hp
E6	119-6045	62	36	33	9 - 13 1/2 hp

Model Number / Code Number Cross Reference

Fractional Units Cross Reference

High/Medium Temperature Units

R134a Model No.	Code No. Version: WA	Code No. Version: WB	Code No. Version: WC	Code No. Version: WD	R22 Model No.	Code No. Version: WA	Code No. Version: WB	Code No. Version: WC	Code No. Version: WD
UCGC0017RWA000B	114N2016				HCMC0025RW*000B	114N2340	114N2341		
UCGC0020RWA000B	114N2017				HCMC0033RW*000B	114N2342	114N2343	114N2344	
UCGC0025RW*000B	114N2018	114N2019			HCMC0050RW*000B		114N2345	114N2347	
HCGC0033RW*000B	114N2020	114N2021	114N2022		HCMC0050RW*000N		114N2346	114N2348	
UCGC0050RW*000B		114N2023	114N2024		HCMC0060RW*000B		114N2349	114N2351	
HCGC0055RW*000B		114N2025	114N2026		HCMC0060RW*000N		114N2350	114N2352	
HCGC0075RWC000B			114N2027		HCMC0075UWC000B			114N2353	
HCGC0075RWC000N			114N2028		HCMC0075UWC000N			114N2354	
HCGC0100UWD000N				114N2029	HCMC0100UWD000N				114N2355
R12 Replacement Model No.	**Code No. Version: WA**	**Code No. Version: WB**	**Code No. Version: WC**	**Code No. Version: WD**	**R404A Model No.**	**Code No. Version: WA**	**Code No. Version: WB**	**Code No. Version: WC**	**Code No. Version: WD**
UCBC0017RWA000B	114N2030				UCHC0020RWA000B	114N2316			
UCBC0020RWA000B	114N2031				UCHC0025RW*000B	114N2317	114N2318		
UCBC0025RW*000B	114N2032	114N2033			UCHC0033RW*000B	114N2319	114N2320	114N2321	
UCBC0033RW*000B	114N2034	114N2035	114N2036		UCHC0050RW*000B		114N2322	114N2324	
UCBC0045RW*000B		114N2037	114N2038		UCHC0050RW*000N		114N2323	114N2325	
HCBC0050RW*000B		114N2039	114N2040		HCHC0060RW*000B		114N2326	114N2328	
HCBC0055UW*000B		114N2041	114N2042		HCHC0060RW*000N		114N2327	114N2329	
HCBC0075UWC000B			114N2043		HCHC0075UWC000B			114N2330	
HCBC0075UWC000N			114N2044		HCHC0075UWC000N			114N2331	
HCBC0100UWD000N				114N2045	HCHC0100UWD000N				114N2332

Low Temperature Units

R404A Model No.	Code No. Version: WA	Code No. Version: WB	Code No. Version: WC	Code No. Version: WD	R404A Model No.	Code No. Version: WA	Code No. Version: WB	Code No. Version: WC	Code No. Version: WD
LCHC0060RW*000B		114N2333	114N2335		LCHC0075UWC000N			114N2338	
LCHC0060RW*000N		114N2334	114N2336		LCHC0100UWD000N				114N2339
LCHC0075UWC000B			114N2337						

Model Number / Code Number Cross Reference *(continued)*

Integral Units Cross Reference					
High/Medium Temperature Units					
R22 Model No.	Code No. Version: WE	Code No. Version: WF	R404A Model No.	Code No. Version: WE	Code No. Version: WF
HCMC0150UW*000N	114N6501	114N6601	HCZC0150UW*000N	114N6301	114N6401
HCMC0150UW*000Q	114N6502	114N6602	HCZC0150UW*000Q	114N6302	114N6402
HCMC0150UW*000R	114N6503	114N6603	HCZC0150UW*000R	114N6303	114N6403
HCMC0200UW*000N	114N6504	114N6604	HCZC0200UW*000N	114N6304	114N6404
HCMC0200UW*000Q	114N6505	114N6605	HCZC0200UW*000Q	114N6305	114N6405
HCMC0200UW*000R	114N6506	114N6606	HCZC0200UW*000R	114N6306	114N6406
HCMC0200UW*000X	114N6507	114N6607	HCZC0200UW*000X	114N6307	114N6407
HCMC0250UW*000N	114N6508	114N6608	HCZC0250UW*000N	114N6308	114N6408
HCMC0250UW*000Q	114N6509	114N6609	HCZC0250UW*000Q	114N6309	114N6409
HCMC0250UW*000R	114N6510	114N6610	HCZC0250UW*000R	114N6310	114N6410
HCMC0250UW*000X	114N6511	114N6611	HCZC0250UW*000X	114N6311	114N6411
HCMC0275UW*000N	114N6516	114N6616	HCZC0275UW*000N	114N6316	114N6416
HCMC0275UW*000Q	114N6517	114N6617	HCZC0275UW*000Q	114N6317	114N6417
HCMC0275UW*000R	114N6518	114N6618	HCZC0275UW*000R	114N6318	114N6418
HCMC0275UW*000X	114N6519	114N6619	HCZC0275UW*000X	114N6319	114N6419
HCMC0300UW*000N	114N6520	114N6620	HCZC0300UW*000N	114N6320	114N6420
HCMC0300UW*000Q	114N6521	114N6621	HCZC0300UW*000Q	114N6321	114N6421
HCMC0300UW*000R	114N6522	114N6622	HCZC0300UW*000R	114N6322	114N6422
HGMC0400UW*000N	114N6527	114N6627	HGZC0400UW*000N	114N6327	114N6427
HGMC0400UW*000Q	114N6528	114N6628	HGZC0400UW*000Q	114N6328	114N6428
HGMC0400UW*000R	114N6529	114N6629	HGZC0400UW*000R	114N6329	114N6429
HGMC0400UW*000X	114N6530	114N6630	HGZC0400UW*000X	114N6330	114N6430
HGMC0500UW*000N	114N6535	114N6635	HGZC0500UW*000N	114N6335	114N6435
HGMC0500UW*000Q	114N6536	114N6636	HGZC0500UW*000Q	114N6336	114N6436
HGMC0500UW*000R	114N6537	114N6637	HGZC0500UW*000R	114N6337	114N6437
HGMC0700UW*000Q	114N6540	114N6640	HGZC0700UW*000Q	114N6340	114N6440
HGMC0700UW*000R	114N6541	114N6641	HGZC0700UW*000R	114N6341	114N6441
HGMC0900UW*000Q	114N6542	114N6642	HGZC0900UW*000Q	114N6342	114N6442
HGMC0900UW*000R	114N6543	114N6643	HGZC0900UW*000R	114N6343	114N6443
HGMC0900UW*000X	114N6544	114N6644	HGZC0900UW*000X	114N6344	114N6444
HGMC1000UW*000Q	114N6545	114N6645	HGZC1000UW*000Q	114N6345	114N6445
HGMC1000UW*000R	114N6546	114N6646	HGZC1000UW*000R	114N6346	114N6446
HGMC1000UW*000X	114N6547	114N6647	HGZC1000UW*000X	114N6347	114N6447
HGMC1200UW*000Q	114N6548	114N6648	HGZC1200UW*000Q	114N6348	114N6448
HGZD1200UW*000R	114N6549	114N6649	HGZD1200UW*000R	114N6349	114N6449
HGZD1200UW*000X	114N6550	114N6650	HGZD1200UW*000X	114N6350	114N6450
HGMC1350UW*000Q	114N6551	114N6651	HGZC1350UW*000Q	114N6351	114N6451
HGMC1350UW*000R	114N6552	114N6652	HGZC1350UW*000R	114N6352	114N6452
HGMC1350UW*000X	114N6553	114N6653	HGZC1350UW*000X	114N6353	114N6453

© Danfoss Inc. 01-07 (USCO)

Model Number / Code Number Cross Reference *(continued)*

Integral Units Cross Reference					
Low Temperature Units					
R404A Model No.	Code No. Version: WE	Code No. Version: WF	R404A Model No.	Code No. Version: WE	Code No. Version: WF
LCHC0150UW*000N	114N6701	114N6725	LCHC0300UW*000X	114N6712	114N6736
LCHC0150UW*000Q	114N6702	114N6726	LGHC0400UW*000N	114N6713	114N6737
LCHC0150UW*000R	114N6703	114N6727	LGHC0400UW*000Q	114N6714	114N6738
LCHC0150UW*000X	114N6704	114N6728	LGHC0400UW*000R	114N6715	114N6739
LCHC0200UW*000N	114N6705	114N6729	LGHC0400UW*000X	114N6716	114N6740
LCHC0200UW*000Q	114N6706	114N6730	LGHC0600UW*000Q	114N6717	114N6741
LCHC0200UW*000R	114N6707	114N6731	LGHC0600UW*000R	114N6718	114N6742
LCHC0200UW*000X	114N6708	114N6732	LGHC0600UW*000X	114N6719	114N6743
LCHC0300UW*000N	114N6709	114N6733	LGHC0750UW*000Q	114N6720	114N6744
LCHC0300UW*000Q	114N6710	114N6734	LGHC0750UW*000R	114N6721	114N6745
LCHC0300UW*000R	114N6711	114N6735	LGHC0750UW*000X	114N6722	114N6746

Dimensions

Fig. 1

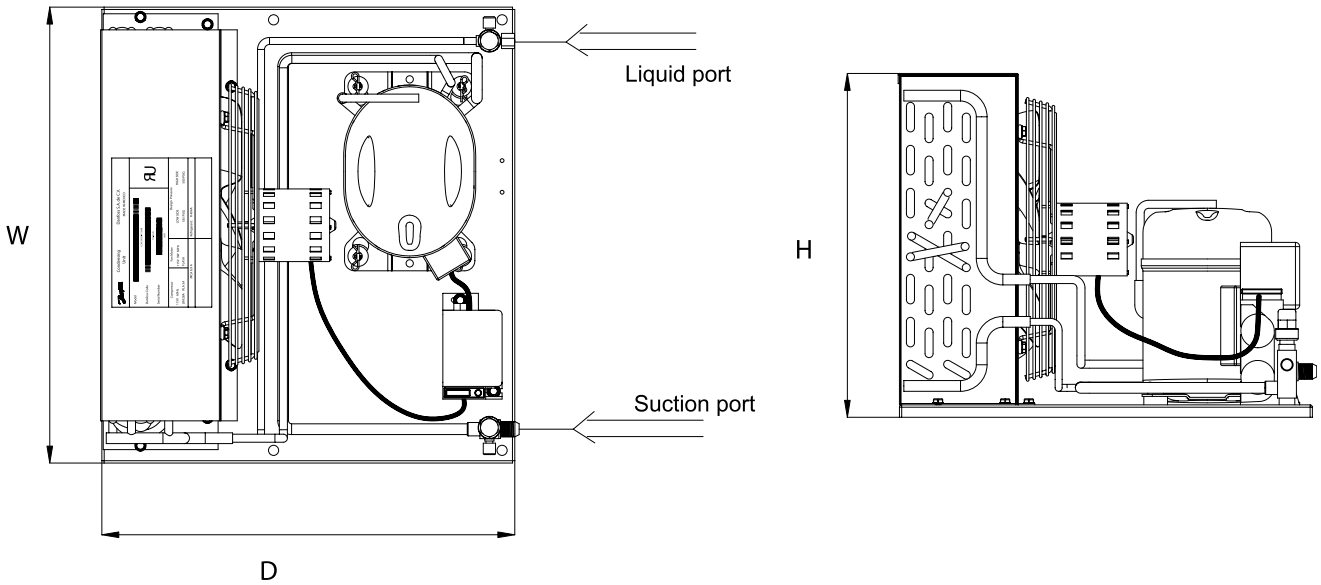

Dimensions *(continued)*

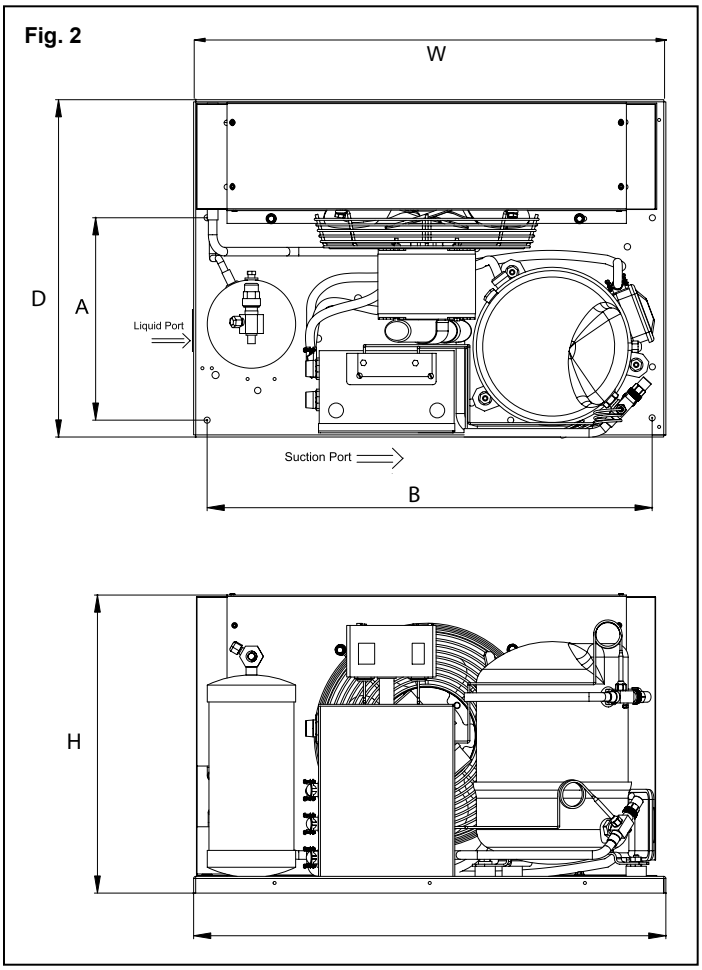

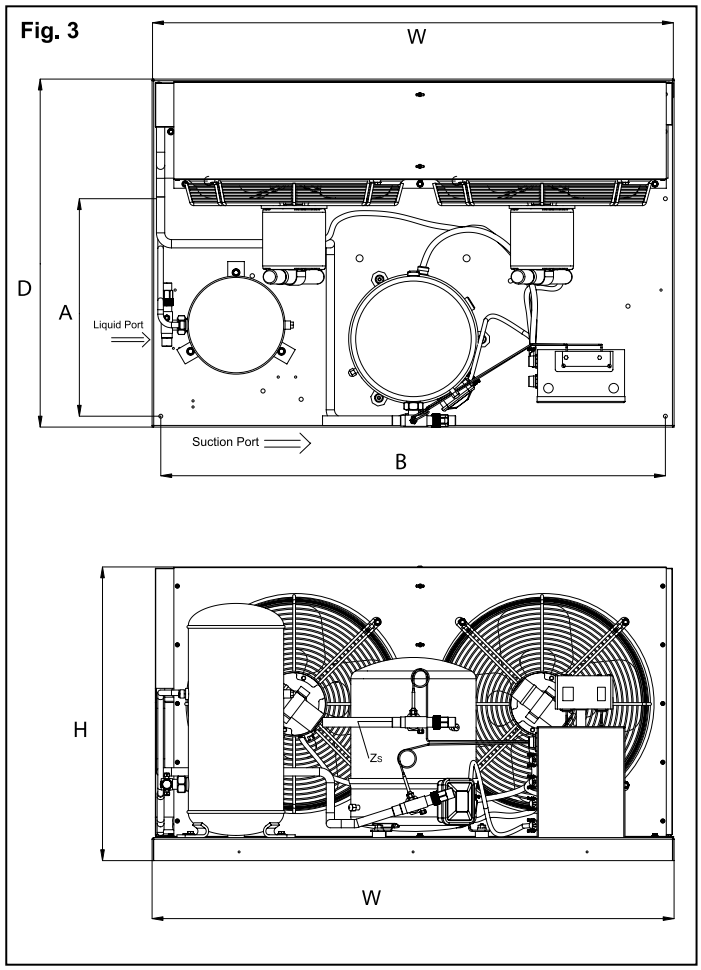

© Danfoss Inc. 01-07 (USCO)

Introduction

Danfoss commercial air- and water-cooled condensing units are designed around the Maneurop reciprocating compressor and share the legendary Maneurop reliability. All units are fitted with a high efficiency condenser, compressor sight glass, suction and discharge valves and built in protections for pressure, temperature and current. All have a pre-wired electrical enclosure with contactor and in 460 V (-4) verisions, a control circuit transfer. All air-cooled units are a two fan design and include a self regulating PTC crankcase heater.

Condensing Unit Nomenclature

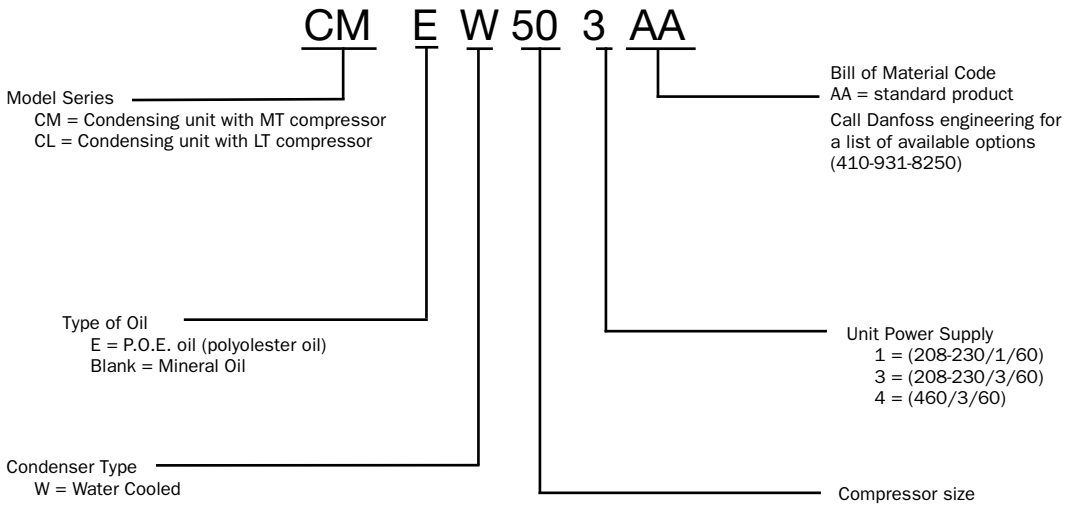

How to order:
To order a condensing unit, the following is required:
1. Model series
2. Type of oil
3. Condenser type
4. Compressor size
5. Unit power supply
6. BOM Code

Example:
To order a standard 460/3/60 water cooled condensing unit with POE oil and a MTZ 50 compressor the model number is

CM	E	W	50	4	AA
1	2	3	4	5	6

Water Cooled Condensing Units

Condensing Unit Model	Compressor Model	Hp	Voltage Code 1 208-230/1/60 MCA	Voltage Code 3 208-230/3/60 MCA	Voltage Code 4 460/3/60 MCA	Dimensions (in.) L	Dimensions (in.) W	Dimensions (in.) H	Connections (in.) Discharge conn. (Flare)	Connections (in.) Suction conn. (ODS)	Connections (in.) Water conn. (F.P.T)	Receiver Capacity (lbs @ 90%)	Approx. Shipping Weight (lbs.)
CMEW 18 AA	**MT(Z) 18**	1.5	11.6	8.0	3.1	24	18	15 3/4	3/8	5/8	3/8	10	135
CMEW 22 AA	**MT(Z) 22**	2	15.1	9.9	4.0	‘24	18	15 3/4	3/8	5/8	3/8	10	140
CMEW 28 AA	**MT(Z) 28**	2.5	22.4	15.1	6.3	‘24	18	15 3/4	3/8	5/8	1/2	10	140
CMEW 36 AA	**MT(Z) 36**	3	26.8	19.6	8.0	‘25 1/4	21	22	1/2	5/8	1/2	10	140
CMEW 50 AA	**MT(Z) 50**	4	33.0	20.5	10.8	‘25 1/4	21	22	1/2	7/8	3/4	16	190
CMEW 64 AA	**MT(Z) 64**	5	47.4	27.6	13.4	‘25 1/4	21	22	1/2	7/8	3/4	16	190
CMEW 72 AA	**MT(Z) 72**	6		26.8	13.4	‘25 1/4	21	22	1/2	1 1/8	3/4	16	195
CMEW 80 AA	**MT(Z) 80**	7		37.5	20.5	‘25 1/4	21	22	1/2	1 1/8	3/4	16	195
CMEW 100 AA	**MT(Z) 100**	9		38.4	19.6	31 1/2	28 3/8	25	1/2	1 1/8	1	26	290
CMEW 125 AA	**MT(Z) 125**	10		48.3	24.1	31 1/2	28 3/8	25	1/2	1 1/8	1	26	290
CMEW 144 AA	**MT(Z) 144**	12		57.1	26.8	31 1/2	28 3/8	25	1/2	1 3/8	1	26	290
CMEW 160 AA	**MT(Z) 160**	13.5		62.5	32.1	31 1/2	28 3/8	25	1/2	1 3/8	1	26	290
CLEW 22 AA	**LT(Z) 22**	2	17.0	11.0	4.5	24	18	15 3/4	3/8	5/8	3/8	10	140
CLEW 28 AA	**LT(Z) 28**	2.5	26.0	17.0	5.3	‘24	18	15 3/4	3/8	5/8	3/8	10	140
CLEW 44 AA	**LT(Z) 44**	3	34.0	22.0	10.0	‘25 1/4	21	19 1/2	1/2	7/8	1/2	16	180
CLEW 50 AA	**LT(Z) 50**	4	37.0	23.0	12.0	‘25 1/4	21	22	1/2	7/8	1/2	16	190
CLEW 88 AA	**LT(Z) 88**	6		38.0	17.0	31 1/2	28 3/8	25	1/2	1 1/8	3/4	26	270
CLEW 100 AA	**LT(Z) 100**	9		43.0	22.0	31 1/2	28 3/8	25	1/2	1 1/8	3/4	26	290

MCA = Minimum Current Amps
Units with voltage codes 1 or 3 have 208-230/1/60 fan motors

© Danfoss Inc. 01-07 (USCO)

Water Cooled Condensing Unit Accessories

Water Cooled Condensors		Medium Temp CMW = R 22 CMEW = R 134a												Low Temp CLW = R 502 CLEW = R 404A/R 507					
Code no.	Description	CMW	CMW	CMW	CMW	CMW	CMW	CMW	CMW	CMW	CMW	CMW	CMW	CLW	CLW	CLW	CLW	CLW	CLW
		CMEW	CMEW	CMEW	CMEW	CMEW	CMEW	CMEW	CMEW	CMEW	CMEW	CMEW	CMEW	CLEW	CLEW	CLEW	CLEW	CLEW	CLEW
		18	22	28	36	50	64	72	80	100	125	144	160	22	28	44	50	88	100
7402501	Condensor only	X	X											X	X				
7402503	Condensor only			X	X														
7402504	Condensor only					X										X	X		
7402505	Condensor only						X											X	
7402506	Condensor only							X	X										X
7402510	Condensor only									X									
7402511	Condensor only										X								
7402512	Condensor only											X	X						

Cupro Nickel Water Cooled Condensors		Medium Temp CMW = R 22 CMEW = R 134a												Low Temp CLW = R 502 CLEW = R 404A/R 507					
Code no.	Description	CMW	CMW	CMW	CMW	CMW	CMW	CMW	CMW	CMW	CMW	CMW	CMW	CLW	CLW	CLW	CLW	CLW	CLW
		CMEW	CMEW	CMEW	CMEW	CMEW	CMEW	CMEW	CMEW	CMEW	CMEW	CMEW	CMEW	CLEW	CLEW	CLEW	CLEW	CLEW	CLEW
		18	22	28	36	50	64	72	80	100	125	144	160	22	28	44	50	88	100
7402514	Nickel Condensor only	X	X											X	X				
7402507	Nickel Condensor only			X	X	X										X	X		
7402513	Nickel Condensor only						X											X	
7402508	Nickel Condensor only							X	X										X
7402515	Nickel Condensor only									X									

Water Valves		Medium Temp CMW = R 22 CMEW = R 134a												Low Temp CLW = R 502 CLEW = R 404A/R 507					
Code no.	Description	CMW	CMW	CMW	CMW	CMW	CMW	CMW	CMW	CMW	CMW	CMW	CMW	CLW	CLW	CLW	CLW	CLW	CLW
		CMEW	CMEW	CMEW	CMEW	CMEW	CMEW	CMEW	CMEW	CMEW	CMEW	CMEW	CMEW	CLEW	CLEW	CLEW	CLEW	CLEW	CLEW
		18	22	28	36	50	64	72	80	100	125	144	160	22	28	44	50	88	100
6804532	$^3/_8$" Danfoss WVFX 10	X	X											X	X				
6804531	$^1/_2$" Danfoss WVFX 15			X	X											X	X		
6804530	$^3/_4$" Danfoss WVFX 20					X	X	X	X									X	X
6804546	1" Danfoss WVFX 25									X	X	X	X						

Receivers		Medium Temp CMW = R 22 CMEW = R 134a												Low Temp CLW = R 502 CLEW = R 404A/R 507					
Code no.	Description	CMW	CMW	CMW	CMW	CMW	CMW	CMW	CMW	CMW	CMW	CMW	CMW	CLW	CLW	CLW	CLW	CLW	CLW
		CMEW	CMEW	CMEW	CMEW	CMEW	CMEW	CMEW	CMEW	CMEW	CMEW	CMEW	CMEW	CLEW	CLEW	CLEW	CLEW	CLEW	CLEW
		18	22	28	36	50	64	72	80	100	125	144	160	22	28	44	50	88	100
6808517	Receiver 5" x 12"	X	X	X	X									X	X				
6808507*	Receiver 6" x 18"					X	X	X	X							X	X		
6808510*	Receiver 8 $^5/_8$" x 18"									X	X	X	X					X	X
6804527	Receiver valve 1" R x $^1/_2$" SAE *required					X	X	X	X	X	X	X	X	X	X	X	X	X	X

Pressure Controls		Medium Temp CMW = R 22 CMEW = R 134a												Low Temp CLW = R 502 CLEW = R 404A/R 507					
Code no.	Description	CMW	CMW	CMW	CMW	CMW	CMW	CMW	CMW	CMW	CMW	CMW	CMW	CLW	CLW	CLW	CLW	CLW	CLW
		CMEW	CMEW	CMEW	CMEW	CMEW	CMEW	CMEW	CMEW	CMEW	CMEW	CMEW	CMEW	CLEW	CLEW	CLEW	CLEW	CLEW	CLEW
		18	22	28	36	50	64	72	80	100	125	144	160	22	28	44	50	88	100
6902502	Dual Pressure Control for all models	X	X	X	X	X	X	X	X	X	X	X	X	X	X	X	X	X	X
6902507	Dual Pressure Control / Auto reset	X	X	X	X	X	X	X	X	X	X	X	X	X	X	X	X	X	X

Run Capacitors		Medium Temp CMT = R 22 CMTE = R 134a												Low Temp CLT = R 502 CLTE = R 404A/R 507					
Code no.	Description	CMW	CMW	CMW	CMW	CMW	CMW	CMW	CMW	CMW	CMW	CMW	CMW	CLW	CLW	CLW	CLW	CLW	CLW
		CMEW	CMEW	CMEW	CMEW	CMEW	CMEW	CMEW	CMEW	CMEW	CMEW	CMEW	CMEW	CLEW	CLEW	CLEW	CLEW	CLEW	CLEW
		18	22	28	36	50	64	72	80	100	125	144	160	22	28	44	50	88	100
7304533	25 MFD 440 VAC	X																	
7304519	35 MFD 440 VAC																		
7304522	45 MFD 440 VAC		X		X	X	X							X		X	X		
7304523	55 MFD 440 VAC							X											
7304528	50 MFD 440 VAC			X											X				

Pre-wired Start Relay and Capacitor Assembly		Medium Temp CMT = R 22 CMTE = R 134a												Low Temp CLT = R 502 CLTE = R 404A/R 507					
Code no.	Description	CMW	CMW	CMW	CMW	CMW	CMW	CMW	CMW	CMW	CMW	CMW	CMW	CLW	CLW	CLW	CLW	CLW	CLW
		CMEW	CMEW	CMEW	CMEW	CMEW	CMEW	CMEW	CMEW	CMEW	CMEW	CMEW	CMEW	CLEW	CLEW	CLEW	CLEW	CLEW	CLEW
		18	22	28	36	50	64	72	80	100	125	144	160	22	28	44	50	88	100
7305548	All units except ones using MT(Z) 18-1		X	X	X	X	X	X	X	X	X	X	X	X	X	X	X	X	X
7305541	For units using MT(Z) 18-1	X																	

Contactors		Medium Temp CMT = R 22 CMTE = R 134a												Low Temp CLT = R 502 CLTE = R 404A/R 507					
Code no.	Description	CMW	CMW	CMW	CMW	CMW	CMW	CMW	CMW	CMW	CMW	CMW	CMW	CLW	CLW	CLW	CLW	CLW	CLW
		CMEW	CMEW	CMEW	CMEW	CMEW	CMEW	CMEW	CMEW	CMEW	CMEW	CMEW	CMEW	CLEW	CLEW	CLEW	CLEW	CLEW	CLEW
		18	22	28	36	50	64	72	80	100	125	144	160	22	28	44	50	88	100
7305502	600v, 3pole, 60A, 208-240 coil											144-3	160-3						
7305503	600v, 3pole, 40A, 208-240 coil							64-3	72-3	100-3		144-4	160-4					88-3	100-3
7305504	600v, 3pole, 30A, 208-240 coil						50-3				125-4						50-3		100-4
7305507	600v, 2pole, 50A, 208-240 coil							64-1											
7305508	600v, 2pole, 40A, 208-240 coil						50-1										50-1		
7305510	600v, 3pole, 25A, 208-240 coil	18-3,4	22-3,4		36-3,4	50-4	64-4	72-4	72-4	100-4				22-3,4	28-3,4	44-3,4	50-4	88-4	
7305512	600v, 2pole, 25A, 208-240 coil														28-1				
7305513	600v, 2pole, 30A, 204-240 coil				36-1											44-1			
7305514	600v, 2pole, 20A, 204-240 coil	18-1	22-1											22-1					

© Danfoss Inc. 01-07 (USCO)

Thermostatic Expansion Valves														
Valve	Applications	Features	Models	Nominal Capacity Ranges in TR for Range N –40 to 50°F						Body Type	Pressure Equalization	Connections		
				R12	R22	R502	R134A	R404A/507	R407C			SAE x SAE	SAE x ODF	ODF x ODF
TUA(E)	Supermarket Cases Walk-In Coolers Residential A/C Ice-Machines Heat Pump Transport Refrigeration Food Dispensers	Interchangeable orifice, Bi-flow, Stainless Steel body/cap tube/bulb, Adjustable Superheat			0.17-4.50		0.13-3.50	0.13-3.50	0.18-4.80	Straightway	Internal / External			1/4 x 3/8 1/4 x 1/2 3/8 x 3/8 3/8 x 1/2 1/2 x 5/8
TUB(E)	Supermarket Cases Walk-In Coolers Residential A/C Commercial HVAC Ice-Machines Heat Pump Transport Refrigeration Food Dispensers	Bi-flow, Stainless Steel body/cap tube/bulb, Adjustable Superheat			0.17-4.50		0.19-3.50	0.19-3.50	0.18-4.80	Angleway / Straightway	Internal / External			1/4 x 3/8 1/4 x 1/2 3/8 x 3/8 3/8 x 1/2
TUC(E)	Supermarket Cases Walk-In Coolers Residential A/C Commercial HVAC Ice-Machines Heat Pump Transport Refrigeration Food Dispensers	Bi-flow, Stainless Steel body/cap tube/bulb, Non-Adjustable Superheat			0.17-4.50		0.19-3.50	0.19-3.50	0.18-4.80	Angleway / Straightway	Internal / External			1/4 x 3/8 1/4 x 1/2 3/8 x 3/8 3/8 x 1/2
TC	Mobile refrigeration equipment Air conditioning units Heat pump systems Liquid coolers Ice cube machines Traditional refrigeration systems	Bi-flow, stainless steel double contact bulb, adjustable and non-adjustable superheat type, available with MOP, model TCAE with interchangeable orifice assembly	TCAE		5.02 - 7.49		3.08 - 5.00	3.40 - 5.44	4.80 - 7.61	Straightway	External			3/8 x 5/8 1/2 x 5/8
			TCBE		5.02 - 7.49		3.08 - 5.00	3.40 - 5.44	4.80 - 7.61	Straightway	External			3/8 x 5/8 1/2 x 5/8
			TCCE		5.02 - 7.49		3.08 - 5.00	3.40 - 5.44	4.80 - 7.61	Straightway	External			3/8 x 5/8 1/2 x 5/8
T(E)2	Supermarket Cases Walk-In Coolers Residential A/C Ice-Machines Heat Pump Transport Refrigeration Food Dispensers	Interchangeable orifice, available with or w/o Maximum Operating Pressure (MOP), Adjustable Superheat		0.20-3.00	0.15-4.50	0.20-3.00	0.11-3.00	0.11-2.60		Angleway	Internal / External	3/8 x 1/2	3/8 x 1/2	1/4 x 1/2 3/8 x 1/2
TDE	Commercial HVAC Heat Pump Transport Refrigeration	High capacity capability, Bi-flow, available with or w/o Maximum Operating Pressure (MOP), adjustable superheat			3.0-7.5				3.0-7.5	Straightway	External			3/8 x 5/8 1/2 x 5/8 1/2 x 7/8 5/8 x 7/8

continued next page

Thermostatic Expansion Valves (Continued)

Valve	Applications	Features	Models	Nominal Capacity Ranges in TR for Range N –40 to 50°F						Body Type	Pressure Equalization	Connections		
				R12	R22	R502	R134A	R404A/507	R407C			SAE x SAE	SAE x ODF	ODF x ODF
TRE	Commercial A/C	Stainless steel power element, capillary tube and bulb, bi flow function, stainless steel double contact bulb, adjustable/ nonadjustable version	TRE 10		8.1 - 10.2		5.4 - 6.8	6.9 - 8.6	7.5 - 9.5	Straightway	External			Inlet $^1/_2$-$^5/_8$-$^7/_8$ Outlet $^1/_2$ - $^5/_8$ $^7/_8$ - 1 $^1/_8$
			TRE 20		10.7 - 20.4		7.5 - 14.4	9.3 - 17.4	9.7 - 18.6	Straightway	External			Inlet $^5/_8$ - $^7/_8$ 1 $^1/_8$ Outlet $^5/_8$ - $^7/_8$ $1^1/_8$ -$1^3/_8$
			TRE 40		20.3 - 41.0		13.2 - 27.2	17.4 - 34.4	18.7 - 38.4	Straightway	External			Inlet $^7/8$ - $1^1/8$ Outlet $^7/_8$ - $1^1/_8$ $1^3/_8$
			TRE 80		40.5 - 71.6		26.4 - 47.4	34.9 - 59.6	37.9 - 67.0	Straightway	External			Inlet $1^1/_8$ - $1^3/_8$ Outlet $1^1/_8$ - $1^3/_8$ $1^5/_8$
TDEB	Commercial HVAC Heat Pump Transport Refrigeration	Balanced Port, High capacity capability, Bi flow, available with or w/o MOP, Adjustable Superheat			7.5-40.0				7.5-40.0	Straightway	External			$^5/_8$ x $^7/_8$ $^5/_8$ x $1^1/_8$ $^7/_8$ x $1^1/_8$ $^7/_8$ x $1^3/_8$ $1^1/_8$ x $1^3/_8$
TE	Commercial HVAC Heat Pump Transport Refrigeration	Take apart valve, High capacity capability	TE 5	2.0-8.0	3.0-12.0	2.0-8.0	3.7-11.2	3.7-10.3		Angleway / Straightway	External	$^1/_2$ X $^5/_8$		$^1/_2$ x $^5/_8$ $^1/_2$ x $^7/_8$ $^5/_8$ x $^7/_8$
			TE 12	3.0-12.0	4.5-18.0	3.0-12.0	4.7-15.0	4.2-13.4		Straightway	External			$^5/_8$ x $^7/_8$ $^7/_8$ x 1 $^7/_8$ x 1 $^1/_8$
			TE 20	20.0	30.0	20.0	18.0	16.5		Straightway	External			$^7/_8$ x 1 $^1/_8$
			TE 55	50.0-85.0	33.0-55.0	24.0-40.0	41.0-62.0	37.0-56.0		Straightway	External			$1^1/_8$ x $1^3/_8$
TXI 2	Desuperheating Liquid Injection	Interchangeable orifice, Adjustable superheat			.32-3.36					Angleway	Internal	$^3/_8$ x $^1/_2$	$^3/_8$ x $^1/_2$	
AKV	Supermarket Cases Walk-In Coolers Ice Machines	Electronic expansion valves	AKV 10		0.3-5.7	0.2-3.9	0.2-4.4	0.2-4.8		Angleway	Internal	$^3/_8$ x $^1/_2$ $^1/_2$ x $^5/_8$		$^3/_8$ x $^1/_2$ $^1/_2$ x $^5/_8$
			AKV 15		7.2-29.0		6.0-24.0	5.6-22.2		Straightway	Internal			$^3/_4$ x $^3/_4$ $^7/_8$ x $^7/_8$ $1^1/_8$ x $1^1/_8$
			AKV 20		28.0-179.0					Straightway	Internal			$1^3/_8$ x $1^3/_8$ $1^5/_8$ x $1^5/_8$ $2^1/_8$ x $2^1/_8$

© Danfoss Inc. 01-07 (USCO)

R22												
Nominal Capacity (Tons)	Connection Type	Body Type	Danfoss				Sporlan		ALCO		Parker	
			Internal		External		Internal Model	External Model	Internal Model	External Model	Internal Model	External Model
			Model	**Code no.**	Model	**Code no.**						
1/5	SAE x SAE	Angleway	TX 2-0.15	**068Z3206**	TEX 2-0.15	**068Z3209**	GV-1/5	GVE-1/5	AFA 1/5H	AFAE 1/5H		
			Orifice 0X	**068-2002**	Orifice 0X	**068-2002**	FV-1/5	FVE-1/5	TI 1/6H	TIE 1/6H		
		Straight thru							AN 1/5H	ANE 1/5H		
	ODF x ODF	Angleway	TX 2-0.15	**068Z3281**	TEX 2-0.15	**068Z3284**	EGV-1/5	EGVE-1/5	AA 1/5 H	AAE 1/5 H		
			Orifice 0X	**068-2089**	Orifice 0X	**068-2089**						
			TUB-0.17	**068U1877**	TUBE-0.17	**068U1827**						
		Straight thru	TUA	**068U2235**	TUAE	**068U2237**			AA 1/5 H	AAE 1/5 H		
			Orifice 00	**068U1030**	Orifice 00	**068U1030**	EFV-1/5	EFVE-1/5	AN 1/5H	ANE 1/5H		
			TUB-0.17	**068U2520**	TUBE-0.17	**068U2530**						
1/4	SAE x SAE	Angleway	TX 2-0.36	**068Z3206**	TEX 2-0.36	**068Z3209**	NIV-1/4		HF 1/4H	HFE 1/4H	G-1/4V	GE-1/4V
			Orifice 00	**068-2003**	Orifice 00	**068-2003**	BFV-AAA	BFVE-AAA	AFA 1/4H	AFAE 1/4H		
									HFK 1/4H	HFKE 1/4H		
		Straight thru							AN 1/4H	ANE 1/4H		
	ODF x ODF	Angleway	TUB-0.26	**068U1858**	TUBE-0.26	**068U1860**	SBFV-AAA	SBFVE-AAA	HFSC 1/4H	HFESC 1/4H	EG-1/4V	EGE-1/4V
									AA 1/4H	AAE 1/4H	N-1/4 V	
									HFKSC 1/4H	HFKESC 1/4H		
		Straight thru	TUA	**068U2235**	TUAE	**068U2237**	EBFV-AAA	EBFVE-AAA	AA 1/4H	AAE 1/4H		
			Orifice 01	**068U1031**	Orifice 01	**068U1031**	EMC-10V	EMCE-10V	AN 1/4H	ANE 1/4H		
			TUB-0.26	**068U2521**	TUBE-0.26	**068U2531**			HFS 1/4H	HFES 1/4H		
									HFKS 1/4	HFKES 1/4H		
1/3	SAE x SAE	Angleway	TX 2-0.36	**068Z3206**	TEX 2-0.36	**068Z3209**	FV-1/3	FVE-1/3	TI 1/3H	TIE 1/3H		
			Orifice 00	**068-2003**	Orifice 00	**068-2003**	GV-1/3	GVE-1/3				
							Q-0(1/3)-V	QE-0(1/3)-V				
		Straight thru										
	ODF x ODF	Angleway	TX 2-0.36	**068Z3281**	TEX 2-0.36	**068Z3284**						
			Orifice 00	**068-2090**	Orifice 00	**068-2090**	EGV-1/3	EGVE-1/3				
			TUB-0.36	**068U1859**	TUBE-0.36	**068U1861**	SQ-0(1/3)-V	SQE-0(1/3)-V				
		Straight thru	TUA	**068U2235**	TUAE	**068U2237**						
			Orifice 02	**068U1032**	Orifice 02	**068U1032**	EFV-1/3	EFVE-1/3				
			TUB-0.36	**068U2522**	TUBE-0.36	**068U2532**	EQ-0(1/3)-V	EQE-0(1/3)-V				

continued next page

R22 (Continued)

Nominal Capacity (Tons)	Connection Type	Body Type	Danfoss				Sporlan		ALCO		Parker	
			Internal		External		Internal Model	External Model	Internal Model	External Model	Internal Model	External Model
			Model	**Code no.**	Model	**Code no.**						
							GV-1/2	GVE-1/2	HF 1/2H	HFE 1/2H	G-1/2V	GE-1/2V
			Orifice 01	**068-2010**	Orifice 01	**068-2010**	NIV-1/2		TCL 1/2H	TCLE 1/2H	NI-1/2 V	
									TI 1/2H	TIE 1/2H		
									HFK 1/2H	HFKE 1/2H		
		Straight thru							AN 1/2H	ANE 1/2H		
									TCL 1/2H	TCLE 1/2H		
	ODF x ODF	Angleway	TUB-0.5	**068U2180**	TUBE-0.5	**068U2161**	EGV-1/2	EGVE-1/2	HFSC 1/2H	HFESC 1/2H	EG-1/2V	EGE-1/2V
									TCL 1/2H	TCLE 1/2H		
									AA 1/2H	AAE 1/2H		
									HFKSC 1/2H	HFKESC 1/2H		
		Straight thru	TUA	**068U2235**	TUAE	**068U2237**			AA 1/2H	AAE 1/2H		
			Orifice 03	**068U1033**	Orifice 03	**068U1033**			AN 1/2H	ANE 1/2H		
			TUB-0.5	**068U2523**	TUBE-0.5	**068U2533**	EFV-1/2	EFVE-1/2	BA/BN 1/2H	BAE/BNE 1/2H		
									HFS 1/2H	HFES 1/2H		
									TCL 1/2H	TCLE 1/2H		
									HFKS 1/2H	HFKES 1/2H		
3/4	SAE x SAE	Angleway	TX 2-0.87	**068Z3206**	TEX 2-0.87	**068Z3209**	GV-3/4	GVE-3/4	TI 3/4H	TIE 3/4H	C-AA(3/4)V	CE-AA(3/4)V
							Q-1(3/4)-V	QE-1(3/4)-V				
			Orifice 01	**068-2010**	Orifice 01	**068-2010**	BFV-AA	BFVE-AA				
		Straight thru										
	ODF x ODF	Angleway	TX 2-0.87	**068Z3281**	TEX 2-0.87	**068Z3284**	EGV-3/4	EGVE-3/4				
			Orifice 01	**068-2091**	Orifice 01	**068-2091**	SQ-1(3/4)-V	SQE-1(3/4)-V				
			TUB-0.75	**068U2183**	TUBE-0.75	**068U2162**	SBFV-AA	SBFVE-AA				
		Straight thru	TUA	**068U2235**	TUAE	**068U2237**						
			Orifice 04	**068U1034**	Orifice 04	**068U1034**	EQ-1(3/4)-V	EQE-1(3/4)-V			EC-AA(3/4)V	ECE-AA(3/4)V
			TUB-0.75	**068U2524**	TUBE-0.75	**068U2534**	EBFV-AA	EBFVE-AA			S-3/4V	SE-3/4V
1	SAE x SAE	Angleway					FV-1	FVE-1	AFA 1H	AFAE 1H		
			TX 2-1.27	**068Z3206**	TEX 2-1.27	**068Z3209**	GV-1	GVE-1	HF 1H	HFE 1H	G-1V	GE-1V
			Orifice 02	**068-2015**	Orifice 02	**068-2015**	Q-2(1)-V	QE-2(1)-V	TCL 1H	TCLE 1H	N-1V	NE-1V
							NIV-1		TI 1H	TIE 1H		
									HFK 1H	HFKE 1H		
		Straight thru							AN 1H	ANE 1H		
									TCL 1H	TCLE 1H		
	ODF x ODF	Angleway	TX 2-1.27	**068Z3281**	TEX 2-1.27	**068Z3284**			HFSC 1H	HFESC 1H		
			Orifice 02	**068-2092**	Orifice 02	**068-2092**	EGV-1	EGVE-1	TCL 1H	TCLE 1H	EG-1V	EGE-1V
			TUB-0.99	**068U2181**	TUBE-0.99	**068U2163**	SQ-2(1)-V	SQE-2(1)-V	AA 1H	AAE 1H	I-1V	
									HFKSC 1H	HFKESC 1H		
		Straight thru	TUA	**068U2235**	TUAE	**068U2237**			AA 1H	AAE 1H		
			Orifice 05	**068U1035**	Orifice 05	**068U1035**	EFV-1	EFVE-1	AN 1H	ANE 1H		
			TUB-0.99	**068U2525**	TUBE-0.99	**068U2535**	EQ-2(1)-V	EQE-2(1)-V	BA/BN 1H	BAE/BNE 1H		
							EMC-11V	EMCE-11V	HFS 1H	HFES 1H		
							EMC-12V	EMCE-12V	TCL 1H	TCLE 1H		
									HFKS 1H	HFKES 1H		

continued next page

 © Danfoss Inc. 01-07 (USCO)

R22 (Continued)												
Nominal Capacity (Tons)	Connection Type	Body Type	Danfoss				Sporlan		ALCO		Parker	
			Internal		External		Internal Model	External Model	Internal Model	External Model	Internal Model	External Model
			Model	**Code no.**	Model	**Code no.**						
1 1/2	SAE x SAE	Angleway					FV-1 1/2	FVE-1 1/2	AFA 1 1/2H	AFAE 1 1/2H		
			TX 2-1.27	**068Z3206**	TEX 2-1.27	**068Z3209**	GV-1 1/2	GVE-1 1/2	HF 1 1/2H	HFE 1 1/2H	G-1 1/2V	GE-1 1/2V
			Orifice 02	**068-2015**	Orifice 02	**068-2006**	Q-3(1 1/2)-V	QE-3(1 1/2)-V	TI 1 1/2H	TIE 1 1/2H	C-A(1 1/2)V	CE-A(1 1/2)V
							BFV-A	BFVE-A	HFK 1 1/2H	HFKE 1 1/2H		
		Straight thru							AN 1 1/2H	ANE 1 1/2H		
	ODF x ODF	Angleway	TX 2-1.27	**068Z3281**	TEX 2-1.27	**068Z3284**	EGV-1 1/2	EGVE-1 1/2	HFSC 1 1/2H	HFESC 1 1/2H	EG-1 1/2V	EGE-1 1/2V
			Orifice 02	**068-2092**	Orifice 02	**068-2092**	SQ-3(1 1/2)-V	SQE-3(1 1/2)-V				
			TUB-1.5	**068U2182**	TUBE-1.5	**068U2164**			AA 1 1/2H	AAE 1 1/2H		
							SBFV-A	SBFVE-A	HFKSC 1 1/2H	HFKESC 1 1/2H		
		Straight thru	TUA	**068U2235**	TUAE	**068U2237**	EFV-1 1/2	EFVE-1 1/2	AA 1 1/2H	AAE 1 1/2H		
			Orifice 06	**068U1036**	Orifice 06	**068U1036**	EQ-3(1 1/2)-V	EQE-3(1 1/2)-V	AN 1 1/2H	ANE 1 1/2H	EC-A(1 1/2)V	ECE-A(1 1/2)V
			TUB-1.5	**068U2526**	TUBE-1.5	**068U2536**	EMC-13V	EMCE-13V	BA/BN 1 1/2H	BAE/BNE 1 1/2H	S-1 1/2V	S-1 1/2V
							EBFV-A	EBFVE-A	HFS 1 1/2H	HFES 1 1/2H		
2	SAE x SAE	Angleway	TX 2-2.27	**068Z3206**	TEX 2-2.27	**068Z3209**			AFA 2H	AFAE 2H	G-2V	GE-2V
								FVE-2	HF 2H	HFE 2H	G-2 1/2 V	GE 2 1/2 V
			Orifice 03	**068-2006**	Orifice 03	**068-2006**		GVE-2	TCL 2H	TCLE 2H		
							BFV-AA	BFVE-AA	TI 2H	TIE 2H		
									HFK 2H	HFKE 2H		
		Straight thru						RIVE-2	AN 2H	ANE 2H		
									TCL 2H	TCLE 2H		
	ODF x ODF	Angleway	TX 2-2.27	**068Z3281**	TEX 2-2.27	**068Z3284**			HFKSC 2H	HFKESC 2H		
			Orifice 03	**068-2093**	Orifice 03	**068-2093**		EGVE-2	HFSC 2H	HFESC 2H	EG-2V	EGE-2V
			TUB-2.0	**068U2063**	TUBE-2.0	**068U2073**			TCL 2H	TCLE 2H	EG-2 1/2V	EGE-2 1/2 V
									AA 2H	AAE 2H	I-2V	
		Straight thru	TUA	**068U2235**	TUAE	**068U2237**			AA 2H	AAE 2H		
			Orifice 07	**068U1037**	Orifice 07	**068U1037**		EFVE-2	AN 2H	ANE 2H		
			TUB-2.0	**068U2527**	TUBE-2.0	**068U2537**	SV-2	SVE-2	BA/BN 2H	BAE/BNE 2H		
								RIVE-2	HFS 2H	HFES 2H		
									TCL 2H	TCLE 2H		
									HFKS 2H	HFKES 2H		

continued next page

R22 (Continued)

Nominal Capacity (Tons)	Connection Type	Body Type	Danfoss				Sporlan		ALCO		Parker	
			Internal		External		Internal Model	External Model	Internal Model	External Model	Internal Model	External Model
			Model	**Code no.**	Model	**Code no.**						
3	SAE x SAE	Angleway	TX 2-3.39 Orifice 04	**068Z3206** **068-2007**	TEX 2-3.39 Orifice 04	**068Z3209** **068-2007**	FV-2 1/2 GV-2 1/2 Q-4(2 1/2)-V BFV-B CV-3	FVE-3 GVE-3 QE-4(2 1/2)-V BFVE-B	AFA 2 1/2H AFA 3H HF 2 1/2- 3H TCL 3H TI 2 1/2H HFK 2 1/2-3H	AFAE 2 1/2 AFAE 3H HFE 2 1/2-3H TCLE 3H TIE 2 1/2H HFKE 2 1/2-3H	G-3V C-B(3)V N-3V	GE-3V CE-B(3)V NE-3V
		Straight thru						RIVE-3	AN 3H AN 2 1/2H TCL 3H	ANE 3H ANE 2 1/2H TCLE 3H		
	ODF x ODF	Angleway	TX 2-3.39 Orifice 04 TUB-2.99	**068Z3281** **068-2094** **068U2064**	TEX 2-3.39 Orifice 04 TUBE-2.99	**068Z3284** **068-2094** **068U2074**	EGV-2 1/2 SQ-4(2 1/2)-V SBFV-B	EGVE-3 SQE-4(2 1/2)-V SBFVE-B	HFSC 2 1/2-3H TCL 3H AA 3H AA 2 1/2H HFKSC 2 1/2-3H	HFESC 2 1/2-3H TCLE 3H AAE 3H AAE 2 1/2H HFKESC 2 1/2-3H	EG-3V	EGE-3V
		Straight thru	TUA Orifice 08 TUB-2.99	**068U2235** **068U1038** **068U2528**	TUAE Orifice 08 TUBE-2.99 TDEX 3	**068U2237** **068U1038** **068U2538**	EFV-2 1/2 EQ-4(2 1/2)-V EBFV-B SV-3	EFVE-3 EQE-4(2 1/2)-V EBFVE-B SVE-3 RIVE-3	AA 2 1/2H AA 3H AN 3H AN 2 1/2H BA/BN 3H BA/BN 2 1/2H HFS 2 1/2-3H TCL 3H HFKS 2 1/2-3	AAE 2 1/2H AAE 3H ANE 3H ANE 2 1/2H BAE/BNE 3H BAE/BNE 2 1/2H HFES 2 1/2-3H TCLE 3H HFKES 2 1/2-3H	EC-B(3)V S-3V	ECE-B(3)V SE-3V
4	SAE x SAE	Angleway	TX 2-4.29 Orifice 05	**068Z3206** **068-2008**	TEX 2-4.29 Orifice 05	**068Z3209** **068-2008**	Q-5(3 1/2)-V Q-6(5)-V CV-4	QE-5(3 1/2)-V QE-6(5)-V CVE-4	TCL 5H TI 4H	TCLE 5H TIE 4H	G-4V C-C(5) V	GE-4V CE-C(5) V
		Straight thru						RIVE-4	AN 4H TCL 5H	ANE 4H TCLE 5H		
	ODF x ODF	Angleway	TX 2-4.29 Orifice 05 TUB-4.46	**068Z3281** **068-2095** **068U2065**	TEX 2-4.29 Orifice 05 TUBE-4.46	**068Z3284** **068-2095** **068U2075**	SQ-5(3 1/2)-V SQ-6(5)-V	SQE-5(3 1/2)-V SQE-6(5)-V	TCL 5H AA 4H	TCLE 5H AAE 4H		
		Straight thru	TUA Orifice 09 TUB-4.46	**068U2235** **068U1039** **068U2529**	TUAE Orifice 09 TUBE-4.46 TCAE-5.02 Orifice 01 TCBE- 5.02 TDEX 4	**068U2237** **068U1039** **068U2539** **068U4281** **068U4100** **068U4203** **068H6102**	EQ-5(3 1/2)-V EQ-6(5)-V SV-4 SV-5	EQE-5(3 1/2)-V EQE-6(5)-V SVE-4 SVE-5 RIVE-4	AA 4H AN 4H BA/BN 4H TCL 5H	AAE 4H ANE 4H BAE/BNE 4H TCLE 5H		

© Danfoss Inc. 01-07 (USCO)

R22-Extended Capacities						
Nominal Capacity (Tons)	Connection Type	Body Type	Danfoss	Sporlan	ALCO	Parker
			External Model	External Model	External Model	External Model
3	SAE x SAE	Angleway	TEX 5-3 Orifice 01	FVE-3 GVE-3 QE-4(2 1/2)-V BFVE-B	AFAE 2 1/2H AFAE 3H HFE 2 1/2-3H TCLE 3H TIE 2 1/2H HFKE 2 1/2-3H	GE-3V CE-B(3)V NE-3V
			TEX 2-3.39 Orifice 04			
		Straight thru		RIVE-3	ANE 3H ANE 2 1/2H TCLE 3H	
	ODF x ODF	Angleway	TEX 2-3.39 Orifice 04	EGVE-3 SQE-4(2 1/2)-V SBFVE-B	HFESC 2 1/2-3H TCLE 3H AAE 3H AAE 2 1/2H HFKESC 2 1/2-3H	EGE-3V
			TEX 5-3 Orifice 01			
		Straight thru	TEX 5-3 Orifice 01	EFVE-3 EQE-4(2 1/2)-V EBFVE-B SVE-3 RIVE-3	AAE 3H AAE 2 1/2H ANE 3H ANE 2 1/2H BAE/BNE 3H BAE/BNE 2 1/2H HFES 2 1/2-3H TCLE 3H HFKES 2 1/2-3H	ECE-B(3)V SE-3V
			TDEX 3			
4	SAE x SAE	Angleway	TEX 5-4.5 Orifice 02	QE-5(3 1/2)-V QE-6(5)-V CVE-4	TIE 4H TCLE 5H	GE-4V
			TEX 2-4.29 Orifice 05			
		Straight thru		RIVE-4	ANE 4H TCLE 5H	
	ODF x ODF	Angleway	TEX 2-4.29 Orifice 05	SQE-5(3 1/2)-V SQE-6(5)-V	AAE 4H TCLE 5H	
			TEX 5-4.5 Orifice 02			
			TEX 12-4.5 Orifice 01			
			TUBE 4.46			
		Straight thru	TEX 5-4.5 Orifice 02	EQE-5(3 1/2)-V EQE-6(5)-V SVE-4 RIVE-4	AAE 4H ANE 4H BAE/BNE 4H TCLE 5H	
			TEX 12-4.5 Orifice 01			
			TDEX 4 TCAE-5.02 Orifice 01			
			TUAE Orifice 09			
			TCBE- 5.02 TDEX 4 TUBE 4.46			

continued next page

R22-Extended Capacities (Continued)						
Nominal Capacity (Tons)	Connection Type	Body Type	Danfoss	Sporlan	ALCO	Parker
			External Model	External Model	External Model	External Model
6	SAE x SAE	Angleway	TEX 2-5.24 Orifice 06	BFVE-C CVE-5	TIE 5H AFAE 5H HFE 5 1/2H TCLE 5H HFKE 5 1/2H	GE-5V CE-C(5)V
		Straight thru		RIVE-5	ANE 5H TCLE 5H	
	ODF x ODF	Angleway	TEX 2-5.24 Orifice 06	SBFVE-C	HFESC 5 1/2H TCLE 5H AAE 5H HFKESC 5 1/2H	
		Straight thru	TCAE-6.04 Orifice 02	EBFVE-C RIVE-5 SVE-5	AAE 5H ANE 5H BAE/BNE 5H BAE/BNE 6H HFES 5 1/2H TCLE 5H HFKES 5 1/2H	ECE-C(5)V SE-5V
			TDEX 6 TCBE- 6.04			
7 1/2	SAE x SAE	Angleway	TEX 5-7.5 Orifice 03		TCLE 7 1/2H	
		Straight thru			TCLE 7 1/2H	
	ODF x ODF	Angleway	TEX 5-7.5 Orifice 03		TCLE 7 1/2H	
			TEX 12-7.5 Orifice 02			
		Straight thru	TEX 5-7.5 Orifice 03		TCLE 7 1/2H	SE 7 1/2V
			TEX 12-7.5 Orifice 02			
			TCAE -7.49 Orifice 03			
			TCBE- 7.49 TDEX 7.5			
8	SAE x SAE	Angleway		CVE-8	HFE 8H	GE 8V
		Straight thru				
	ODF x ODF	Angleway			HFESC 8H	
		Straight thru	TDEBX 8 TRE 10-8X	SVE-8 EBSVE-8	HFES 8H TFE 8H TFE 10H	
11	SAE x SAE	Angleway			HFE 10H TCLE 10H	
		Straight thru			TCLE 10H	

continued next page

 © Danfoss Inc. 01-07 (USCO)

R22-Extended Capacities (Continued)						
Nominal Capacity (Tons)	Connection Type	Body Type	Danfoss	Sporlan	ALCO	Parker
			External Model	External Model	External Model	External Model
11	ODF x ODF	Angleway			HFESC 10H TCLE 10H TJLE 11H	
		Straight thru	TDEBX 11 TRE 10-10X TRE 20-10X	SVE-10 EBSVE-11	TJLE 11H HFES 10H TRAE+ 10H TCLE 10H TFE 10H	SE 10V RE 10V
12 1/2	SAE x SAE	Angleway	TEX 5-12 Orifice 04		TCLE 12H	
		Straight thru			TCLE 12H	
	ODF x ODF	Angleway	TEX 5-12 Orifice 04		TCLE 12H	
			TEX 12-12 Orifice 03			
		Straight thru	TEX 5-12 Orifice 04			
			TEX 12-12 Orifice 03		TCLE 12H TFE 12H	
			TDEBX 12.5 TRE 20-12.5X			
16	SAE x SAE	Angleway			HFE 15H	
		Straight thru				
	ODF x ODF	Angleway			HFESC 15H TJLE 14H TJR 14H	
		Straight thru	TDEBX 16 TRE 20-15X	OVE-15	HFES 15H TRAE + 15H TJLE 14H TJR 14H	RE 15V
19	SAE x SAE	Angleway				
		Straight thru				
	ODF x ODF	Angleway	TEX 12-18 Orifice 04		TJR 18H	
		Straight thru	TEX 12-18 Orifice 04		TJR 18H	
			TDEBX 19			
20	SAE x SAE	Angleway			HFE 20H	
		Straight thru				
	ODF x ODF	Angleway			TER 22H	
		Straight thru	TDEBX 20 TRE 20-20X TRE 40-20X	OVE-20	HFES 20H TRAE+ 20H TER 22H TFE 20H	RE 20V

continued next page

R22-Extended Capacities (Continued)						
Nominal Capacity (Tons)	Connection Type	Body Type	Danfoss	Sporlan	ALCO	Parker
			External Model	External Model	External Model	External Model
26	ODF x ODF	Angleway			TER 26H	
		Straight thru	TDEBX 26 TRE 40-25X		TER 26H	
30	ODF x ODF	Angleway	TEX 20-30 Orifice 01			
		Straight thru	TEX 20-30 Orifice 01	OVE-30	TRAE+ 30H	RE 30V
			TDEBX 30 TRE 40-30X			
40	ODF x ODF	Angleway			TER 35H	
		Straight thru	TDEBX 40 TRE 40-40X TRE 80-40X	OVE-40	TRAE+ 40H TER 35H	RE 40V
50	ODF x ODF	Angleway	TEX 55-50 Orifice 01		TER 45H TIR 55H	
		Straight thru	TEX 55-50 Orifice 01	OVE-55	TRAE 50H TER 45H	
			TRE 80-55X		TIR 55H	
80	ODF x ODF	Angleway	TEX 55-85 Orifice 02		THR 70H THR 85H	
		Straight thru	TEX 55-85 Orifice 02	OVE-70	TRAE 60H TRAE 70H	RE 70V
			TRE 80-70X		THR 70H THR 85H	

© Danfoss Inc. 01-07 (USCO)

R12												
Nominal Capacity (Tons)	Connection Type	Body Type	Danfoss				Sporlan		ALCO		Parker	
			Internal		External		Internal Model	External Model	Internal Model	External Model	Internal Model	External Model
			Model	**Code no.**	Model	**Code no.**						
1/8	SAE x SAE	Angleway	TF 2-0.2 Orifice 00	**068Z3202** **068-2003**	TEF 2-0.2 Orifice 00	**068Z3204** **068-2003**	FF-1/8 GF-1/8 Q-0(.17)-F NIF-1/8	FFE-1/8 GFE-1/8 QE-0(.17)-F	HF 1/8F AFA 1/8F HFK 1/8F	HFE 1/8F AFAE 1/8F HFKE 1/8F	G-1/8J	GE-1/8J
		Straight thru							AN 1/8F	ANE 1/8F		
	ODF x ODF	Angleway	TF 2-0.2 Orifice 00	**068Z3280** **068-2090**	TEF 2-0.2 Orifice 00	**068Z3283** **068-2090**	EGF-1/8 SQ-0(.17)-F	EGFE-1/8 SQE-0(.17)-F	HFSC 1/8F AA 1/8 F HFKSC 1/8F	HFESC 1/8F AAE 1/8F HFKESC 1/8F	EG-1/8J	EGE-1/8J
		Straight thru					EFF-1/8 EQ-0(.17)-F EMC-10F	EFFE-1/8 EQE-0(.17)-F	AN 1/8F HFS 1/8F AA 1/8 F HFKS 1/8F	ANE 1/8F HFES 1/8F AAE 1/8F HFKES 1/8F		
1/4	SAE x SAE	Angleway	TF 2-0.3 Orifice 01	**068Z3202** **068-2010**	TEF 2-0.3 Orifice 01	**068Z3204** **068-2010**	FF-1/4 GF-1/4 Q-1(.25)-F NIF-1/4 BFF-AAA	FFE-1/4 GFE-1/4 QE-1(.25)-F BFFE-AAA	AFA 1/4F HF 1/4F TCL 1/4F HFK 1/4F	AFAE 1/4F HFE 1/4F TCLE 1/4F HFKE 1/4F	G-1/4J N-1/4 J	GE-1/4J
		Straight thru							TCL 1/4F AN 1/4F	TCLE 1/4F ANE 1/4F		
	ODF x ODF	Angleway	TF 2-0.3 Orifice 01	**068Z3280** **068-2091**	TEF 2-0.3 Orifice 01	**068Z3283** **068-2091**	EGF-1/4 SQ-1(.25)-F	EGFE-1/4 SQE-1(.25)-F	HFSC 1/4F TCL 1/4F AA 1/4F HFKSC 1/4F	HFESC 1/4F TCLE 1/4F AAE 1/4F HFKESC 1/4F	EG-1/4J	EGE-1/4J
		Straight thru					EFF-1/4 EQ-1(.25)-F	EFFE-1/4 EQE-1(.25)-F	AN 1/4F AA 1/4F HFS 1/4F TCL 1/4F BA/BN 1/4F HFKS 1/4F	ANE 1/4F AAE 1/4F HFES 1/4F TCLE 1/4F BAE/BNE 1/4F HFKES 1/4F		
1/2	SAE x SAE	Angleway	TF 2-0.5 Orifice 02	**068Z3202** **068-2015**	TEF 2-0.5 Orifice 02	**068Z3204** **068-2015**	FF-1/2 GF-1/2 Q-2(.5)-F BFF-AA NIF-1/2	FFE-1/2 GFE-1/2 QE-2(.5)-F BFFE-AA	AFA 1/2F HF 1/2F TCL 1/2F AA 1/2F HFK 1/2F	AFAE 1/2 HFE 1/2F TCLE 1/2F AAE 1/2F HFKE 1/2F	G-1/2J C-AA(1/2)J N-1/2J	GE-1/2J CE-AA(1/2)J
		Straight thru							AN 1/2F TCL 1/2F AA 1/2F	ANE 1/2F TCLE 1/2F AAE 1/2F		
	ODF x ODF	Angleway	TF 2-0.5 Orifice 02	**068Z3280** **068-2092**	TEF 2-0.5 Orifice 02	**068Z3283** **068-2092**	EGF-1/2 SQ-2(.5)-F SBFF-AA	EGFE-1/2 SQE-2(.5)-F SBFFE-AA	HFSC 1/2F TCL 1/2F HFKSC 1/2F	HFESC 1/2F TCLE 1/2F HFKESC 1/2F	EG-1/2J I-1/2J	EGE-1/2J
		Straight thru					EFF-1/2 EQ-2(.5)-F EBFF-AA EMC-11F	EFFE-1/2 EQE-2(.5)-F EBFFE-AA EMCE-11F	HFS 1/2F TCL 1/2F AN 1/2F BA/BN 1/2F HFKS 1/2F	HFES 1/2F TCLE 1/2F ANE 1/2F BAE/BNE 1/2F HFKES 1/2F	EC-AA(1/2)J S-1/2J	ECE-AA(1/2)J SE-1/2J

continued next page

R12 (Continued)

Nominal Capacity (Tons)	Connection Type	Body Type	Danfoss				Sporlan		ALCO		Parker	
			Internal		External		Internal Model	External Model	Internal Model	External Model	Internal Model	External Model
			Model	**Code no.**	Model	**Code no.**						
1	SAE x SAE	Angleway	TF 2-1.0 Orifice 03	**068Z3202** **068-2006**	TEF 2-1.0 Orifice 03	**068Z3204** **068-2006**	FF-1 GF-1 Q-3(1.0)-F BFF-A NIF-1	FFE-1 GFE-1 QE-3(1.0)-F BFFE-A	AFA 1F HF 1F TCL 1F HFK 1F	AFAE 1F HFE 1F TCLE 1F HFKE 1F	G-1J C-A(1)J	GE-1J CE-A(1)J
		Straight thru							TCL 1F AN 1F	TCLE 1F ANE 1F		
	ODF x ODF	Angleway	TF 2-1.0 Orifice 03	**068Z3280** **068-2093**	TEF 2-1.0 Orifice 03	**068Z3283** **068-2093**	EGF-1 SQ-3(1.0)-F SBFF-A	EGFE-1 SQE-3(1.0)-F SBFFE-A	HFSC 1F TCL 1F AA 1F HFKSC 1F	HFESC 1F TCLE 1F AAE 1F HFKESC 1F	EG-1J I-1J	EGE-1J
		Straight thru					EFF-1 EQ-3(1.0)-F EBFF-A EMC-13F	EFFE-1 EQE-3(1.0)-F EBFFE-A EMCE-13F	AN 1F HFS 1F TCL 1F AA 1F BA/BN 1F HFKS 1F	ANE 1F HFES 1F TCLE 1F AAE 1F BAE/BNE 1F HFKES 1F	EC-A(1)J S-1J	ECE-A(1)J SE-1J
1 1/2	SAE x SAE	Angleway	TF 2-1.5 Orifice 04	**068Z3202** **068-2007**	TEF 2-1.5 Orifice 04	**068Z3204** **068-2007**	FF-1 1/2 GF-1 1/2 Q-4(1.5)-F BFF-B	FFE-1 1/2 GFE-1 1/2 QE-4(1.5)-F BFFE-B	AFA 1 1/2F HF 1 1/2F HFK 1 1/4F HFK 1 1/2F	AFAE 1 1/2F HFE 1 1/2F HFKE 1 1/4F HFKE 1 1/2F	G-1 1/2J	GE-1 1/2J
		Straight thru							AN 1 1/2F	ANE 1 1/2F		
	ODF x ODF	Angleway	TF 2-1.5 Orifice 04	**068Z3280** **068-2094**	TEF 2-1.5 Orifice 04	**068Z3283** **068-2094**	EGF-1 1/2 SQ-4(1.5)-F	EGFE-1 1/2 SQE-4(1.5)-F	HFSC 1 1/2F AA 1 1/2F HFKSC 1 1/4F HFKSC 1 1/2F	HFESC 1 1/2F AAE 1 1/2F HFKESC 1 1/4F HFKESC 1 1/2F	EG-1 1/2J	EGE-1 1/2J
		Straight thru					EFF-1 1/2 EQ-4(1.5)-F	EFFE-1 1/2 EQE-4(1.5)-F	AN 1 1/2F HFS 1 1/2F AA 1 1/2F BA/BN 1 1/4F BA/BN 1 1/2F HFKS 1 1/4F HFKS 1 1/2F	ANE 1 1/2F HFES 1 1/2F AAE 1 1/2F BAE/BNE 1 1/4F BAE/BNE 1 1/4F HFKES 1 1/4F HFKES 1 1/2F		

continued next page

 © Danfoss Inc. 01-07 (USCO)

R12 (Continued)												
Nominal Capacity (Tons)	Connection Type	Body Type	Danfoss				Sporlan		ALCO		Parker	
			Internal		External		Internal Model	External Model	Internal Model	External Model	Internal Model	External Model
			Model	**Code no.**	Model	**Code no.**						
2	SAE x SAE	Angleway	TF 2-2.0 Orifice 05	**068Z3202** **068-2008**	TEF 2-2.0 Orifice 05	**068Z3204** **068-2008**	FF-2 Q-5(2.0)-F CF-2	FFE-2 GFE-2 QE-5(2.0)-F CFE-2	AFA 2F HF 2F TCL 2F HFK 2F	AFAE 2F HFE 2F TCLE 2F HFKE 2F	G-2J C-B(2)J N-2J	GE-2J CE-B(2)J NE-2J
		Straight thru							TCL 2F AN 2F	TCLE 2F ANE 2F		
	ODF x ODF	Angleway	TF 2-2.0 Orifice 05	**068Z3280** **068-2095**	TEF 2-2.0 Orifice 05	**068Z3283** **068-2095**	SQ-5(2.0)-F SBFF-B	EGFE-2 SQE-5(2.0)-F SBFFE-B	HFSC 2F TCL 2F AA 2F HFKSC 2F	HFESC 2F TCLE 2F AAE 2F HFKESC 2F	EG-2J	EGE-2J
		Straight thru					EQ-5(2.0)-F EBFF-B SF-2	EFFE-2 EQE-5(2.0)-F EBFFE-B SFE-2	AN 2F HFS 2F TCL 2F AA 2F BA/BN 2F HFKS 2F	ANE 2F HFES 2F TCLE 2F AAE 2F BAE/BNE 2F HFKES 2F	EC-B(2)J S-2J	ECE-B(2)J SE-2J
3	SAE x SAE	Angleway	TF 2-3.0 Orifice 06	**068Z3202** **068-2009**	TEF 2-3.0 Orifice 06	**068Z3204** **068-2009**	Q-6(3.0)-F BFF-C CF-2 1/2 CF-3	QE-6(3.0)-F BFFE-C CFE-2 1/2 CFE-3	AFA 2 1/2F AFA 3F TCL 3F HF 3 1/2F HFK 3 1/2F	AFAE 2 1/2F AFAE 3F TCLE 3F HFE 3 1/2F HFKE 3 1/2F	G-2 1/2 J G-3J C-C(3)J	GE-2 1/2 J GE-3J CE-C(3)J
		Straight thru							TCL 3F AN 2 1/2F AN 3F	TCLE 3F ANE 2 1/2F ANE 3F		
	ODF x ODF	Angleway	TF 2-3.0 Orifice 06	**068Z3280** **068-2096**	TEF 2-3.0 Orifice 06	**068Z3283** **068-2096**	SQ-6(3.0)-F SBFF-C	SQE-6(3.0)-F SBFFE-C	TCL 3F AA 2 1/2F AA 3F HFSC 3 1/2F HFKSC 3 1/2F	TCLE 3F AAE 2 1/2F AAE 3F HFESC 3 1/2F HFKESC 3 1/2F		
		Straight thru					EQ-6(3.0)-F EBFF-C SF-2 1/2 SF-3	EQE-6(3.0)-F EBFFE-C SFE-2 1/2 SFE-3	TCL 3F AA 2 1/2F AA 3F AN 2 1/2F AN 3F BA/BN 2 1/2F BA/BN 3F HFS 3 1/2F HFKS 3 1/2F	TCLE 3F AAE 2 1/2F AAE 3F ANE 2 1/2F ANE 3F BAE/BNE 2 1/2F BAE/BNE 3F HFES 3 1/2F HFKES 3 1/2F	EC-C(3) J S-3 J	ECE-C(3) J SE-3 J

R12-Extended Capacities						
Nominal Capacity (Tons)	Connection Type	Body Type	Danfoss	Sporlan	ALCO	Parker
			External Model	External Model	External Model	External Model
2	SAE x SAE	Angleway	TEF 5-2 Orifice 01	FFE-2 GFE-2 QE-5(2)-F	AFAE 2F HFE 2F TCLE 2F HFKE 2F	GE-2J CE-B(2)J NE-2J
		Straight thru			TCLE 2F ANE 2F	
	ODF x ODF	Angleway	TEF 5-2 Orifice 01	EGFE-2 SQE-5(2)-F SBFFE-B	HFESC 2F TCLE 2F AAE 2F HFKESC 2F	EGE-2J
		Straight thru	TEF 5-2 Orifice 01	EFFE-2 EQE-5(2)-F EBFFE-B SFE-2	AAE 2F HFES 2F TCLE 2F ANE 2F BAE/BNE 2F HFKES 2F	ECE-B(2)J SE-2J
3	SAE x SAE	Angleway	TEF 5-3 Orifice 02	QE-6(2 1/2)-F BFFE-C CFE-3	AFAE 2 1/2 -3F HFE 3 1/2F TCLE 3F HFKE 3 1/2F	GE-2 1/2 -3J CE-C(3)J
		Straight thru			TCLE 3F ANE 2 1/2 -3F	
	ODF x ODF	Angleway	TEF 5-3 Orifice 02 TEF 12-3 Orifice 01	SQE-6(2 1/2)-F SBFFE-C	HFESC 3 1/2F TCLE 3F AAE 2 1/2 -3F HFKESC 3 1/2F	
		Straight thru	TEF 5-3 Orifice 02 TEF 12-3 Orifice 01	EQE-6(2 1/2)-F EBFFE-C SFE-3	AAE 2 1/2 -3F HFES 3 1/2F TCLE 3F ANE 2 1/2 -3F BAE/BNE 2 1/2 -3F HFKES 3 1/2F	ECE-C(3)J SE-3J
5	SAE x SAE	Angleway	TEF 5-5 Orifice 03	CFE-5	TCLE 4F HFE 5F	GE-5J
		Straight thru			TCLE 4F	
	ODF x ODF	Angleway	TEF 5-5 Orifice 03 TEF 12-5 Orifice 02		HFESC 5F TCLE 4F AAE 4F	
		Straight thru	TEF 5-5 Orifice 03 TEF 12-5 Orifice 02	EBSFE-5 SFE-5	AAE 4F TFE 5F HFES 5F TCLE 4F BAE/BNE 3 1/2F	RE-6J SE-5J

continued next page

 © Danfoss Inc. 01-07 (USCO)

R12-Extended Capacities (Continued)						
Nominal Capacity (Tons)	Connection Type	Body Type	Danfoss	Sporlan	ALCO	Parker
			External Model	External Model	External Model	External Model
8	SAE x SAE	Angleway	TEF 5-8 Orifice 04		TCLE 6 1/2F TCLE 7 1/2F HFE 6F HFE 9F	
		Straight thru			TCLE 6 1/2F TCLE 7 1/2F	
	ODF x ODF	Angleway	TEF 5-8 Orifice 04		HFESC 6F HFESC 9F TCLE 6 1/2F	
			TEF 12-8 Orifice 03		TCLE 7 1/2F TJLE 7F TJLE 8F TJR 8F	
		Straight thru	TEF 5-8 Orifice 04	SFE-6 EBSFE-7 OFE-9	HFES 6F HFES 9F TFE 6 1/2F TFE 8F TCLE 6 1/2F	
			TEF 12-8 Orifice 03		TCLE 7 1/2F TJLE 7F TJLE 8F TRAE+ 7 1/2F TJR 8F	RE-9J
12	SAE x SAE	Angleway			HF 12F	
		Straight thru				
	ODF x ODF	Angleway	TEF 12-12 Orifice 04		TJR 11F TER 13F HFESC 12F	
		Straight thru	TEF 12-12 Orifice 04	OFE-12	TRAE+ 10F TRAE+ 12F TJR 11F HFES 12F TFE 12F TER 13F	RE-12J
20	SAE x SAE	Angleway				
		Straight thru				
	ODF x ODF	Angleway	TEF 20-20 Orifice 01		TER 15F TER 20F	
		Straight thru	TEF 20-20 Orifice 01	OFE-16 OFE-23	TRAE+ 18F TER 15F TER 20F	RE-16J RE-23J

continued next page

R12-Extended Capacities (Continued)						
Nominal Capacity (Tons)	Connection Type	Body Type	Danfoss	Sporlan	ALCO	Parker
			External Model	External Model	External Model	External Model
33	SAE x SAE	Angleway				
		Straight thru				
	ODF x ODF	Angleway	TEF 55-33 Orifice 01		TER 25F TIR 35F	
		Straight thru	TEF 55-33 Orifice 01	OFE-32	TRAE+ 25F TER 25F TIR 35F	
55	SAE x SAE	Angleway				
		Straight thru				
	ODF x ODF	Angleway	TEF 55-55 Orifice 02		THR 45F THR 55F TMR 55F	
		Straight thru	TEF 55-55 Orifice 02	OFE-40	THR 45F THR 55F TMR 55F	RE-40J

© Danfoss Inc. 01-07 (USCO)

R502												
Nominal Capacity (Tons)	Connection Type	Body Type	Danfoss				Sporlan		ALCO		Parker	
			Internal		External		Internal Model	External Model	Internal Model	External Model	Internal Model	External Model
			Model	**Code no.**	Model	**Code no.**						
1/8	SAE x SAE	Angleway	TY 2-0.11 Orifice 0X	**068Z3212** **068-2003**	TEY 2-0.11 Orifice 0X	**068Z3215** **068-2003**	FR-1/8 GR-1/8 Q-0(.17)-R NIR-1/8	FRE-1/8 GRE-1/8 QE-0(.17)-R	HF 1/8R AFA 1/8R HFK 1/8R	HFE 1/8R AFAE 1/8R HFKE 1/8R	G-1/8S	GE-1/8S
		Straight thru										
	ODF x ODF	Angleway	TY 2-0.11 Orifice 0X	**068Z3282** **068-2090**	TEY 2-0.11 Orifice 0X	**068Z3285** **068-2090**	EGR-1/8 SQ-0(.17)-R	EGRE-1/8 SQE-0(.17)-R	HFSC 1/8R AA 1/8R HFKSC 1/8R	HFESC 1/8R AAE 1/8R HFKESC 1/8R	EG-1/8S	EGE-1/8S
		Straight thru					EFR-1/8 EQ-0(.17)-R	EFRE-1/8 EQE-0(.17)-R	HFS 1/8R AA 1/8R HFKS 1/8R	HFES 1/8R AAE 1/8R HFKES 1/8R		
1/4	SAE x SAE	Angleway	TY 2-0.25 Orifice 00	**068Z3212** **068-2010**	TEY 2-0.25 Orifice 00	**068Z3215** **068-2010**	FR-1/4 GR-1/4 Q-1(.25)-R NIR-1/4 BFR-AAA	FRE-1/4 GRE-1/4 QE-1(.25)-R BFRE-AAA	HF 1/4R TCL 1/4R AFA 1/4R HFK 1/4R	HFE 1/4R TCLE 1/4R AFAE 1/4R HFKE 1/4R	G-1/4S N 1/4 S	GE-1/4S
		Straight thru							TCL 1/4R	TCLE 1/4R		
	ODF x ODF	Angleway	TY 2-0.25 Orifice 00	**068Z3282** **068-2091**	TEY 2-0.25 Orifice 00	**068Z3285** **068-2091**	EGR-1/4 SQ-1(.25)-R SBFR-AAA	EGRE-1/4 SQE-1(.25)-R SBFRE-AAA	HFSC 1/4R TCL 1/4R AA 1/4 R HFKSC 1/4R	HFESC 1/4R TCLE 1/4R AAE 1/4R HFKESC 1/4R	EG-1/4S	EGE-1/4S
		Straight thru					EFR-1/4 EBFR-AAA EQ-1(.25)-R EMC-10R	EFRE-1/4 EBFRE-AAA EQE-1(.25)-R EMCE-10R	HFS 1/4R AA 1/4 R TCL 1/4R BA/BN 1/4R HFKS 1/4R	HFES 1/4R AAE 1/4R TCLE 1/4R BAE/BNE 1/4R HFKES 1/4R		
1/2	SAE x SAE	Angleway	TY 2-0.61 Orifice 01	**068Z3212** **068-2015**	TEY 2-0.61 Orifice 01	**068Z3215** **068-2015**	FR-1/2 GR-1/2 Q-2(.5)-R BFR-AA NIR-1/2	FRE-1/2 GRE-1/2 QE-2(.5)-R BFRE-AA	HF 1/2R TCL 1/2R AFA 1/2R HFK 1/2R	HFE 1/2R TCLE 1/2R AFAE 1/2R HFKE 1/2R	G-1/2S C-AA(1/2)S N-1/2S	GE-1/2S CE-AA(1/2)S
		Straight thru							TCL 1/2R	TCLE 1/2R		
	ODF x ODF	Angleway	TY 2-0.61 Orifice 01	**068Z3282** **068-2092**	TEY 2-0.61 Orifice 01	**068Z3285** **068-2092**	EGR-1/2 SQ-2(.5)-R SBFR-AA	EGRE-1/2 SQE-2(.5)-R SBFRE-AA	HFSC 1/2R TCL 1/2R AA 1/2R HFKSC 1/2R	HFESC 1/2R TCLE 1/2R AAE 1/2R HFKESC 1/2R	EG-1/2S I-1/2S	EGE-1/2S
		Straight thru					EFR-1/2 EQ-2(.5)-R EBFR-AA EMC-11R	EFRE-1/2 EQE-2(.5)-R EBFRE-AA	HFS 1/2R TCL 1/2R AA 1/2R BA/BN 1/2R HFKS 1/2R	HFES 1/2R TCLE 1/2R AAE 1/2R BAE/BNE 1/2R HFKES 1/2R	EC-AA(1/2)S S-1/2S	ECE-AA(1/2)S SE-1/2S

continued next page

R502 (Continued)

Nominal Capacity (Tons)	Connection Type	Body Type	Danfoss				Sporlan		ALCO		Parker	
			Internal		External		Internal Model	External Model	Internal Model	External Model	Internal Model	External Model
			Model	**Code no.**	Model	**Code no.**						
1	SAE x SAE	Angleway	TY 2-0.89 Orifice 02	**068Z3212** **068-2006**	TEY 2-0.89 Orifice 02	**068Z3215** **068-2006**	FR-1 GR-1 Q-3(1.0)-R BFR-A NIR-1	FRE-1 GRE-1 QE-3(1.0)-R BFRE-A	HF 1R TCL 1R AFA 1R HFK 1R	HFE 1R TCLE 1R AFAE 1R HFKE 1R	G-1S C-A(1)S	GE-1S CE-A(1)S
		Straight thru							TCL 1R	TCLE 1R		
	ODF x ODF	Angleway	TY 2-0.89 Orifice 02	**068Z3282** **068-2093**	TEY 2-0.89 Orifice 02	**068Z3285** **068-2093**	EGR-1 SQ-3(1.0)-R SBFR-A	EGRE-1 SQE-3(1.0)-R SBFRE-A	HFSC 1R TCL 1R AA 1R HFKSC 1R	HFESC 1R TCLE 1R AAE 1R HFKESC 1R	EG-1S I-1S	EGE-1S
		Straight thru					EFR-1 EQ-3(1.0)-R EBFR-A EMC-12R EMC-13R	EFRE-1 EQE-3(1.0)-R EBFRE-A EMCE-12R EMCE-13R	HFS 1R TCL 1R AA 1R BA/BN 1R HFKS 1R	HFES 1R TCLE 1R AAE 1R BAE/BNE 1R HFKES 1R	EC-A(1)S S-1S	ECE-A(1)S SE-1S
1 1/2	SAE x SAE	Angleway	TY 2-1.59 Orifice 03	**068Z3212** **068-2007**	TEY 2-1.59 Orifice 03	**068Z3215** **068-2007**	FR-1 1/2 GR-1 1/2 Q-4(1.5)-R BFR-B	FRE-1 1/2 GRE-1 1/2 QE-4(1.5)-R BFRE-B	HF 1 1/2R AFA 1 1/2R HFK 1 1/4R HFK 1 1/2R	HFE 1 1/2R AFAE 1 1/2R HFKE 1 1/4R HFKE 1 1/2R	G-1 1/2S	GE-1 1/2S
		Straight thru										
	ODF x ODF	Angleway	TY 2-1.59 Orifice 03	**068Z3282** **068-2094**	TEY 2-1.59 Orifice 03	**068Z3285** **068-2094**	EGR-1 1/2 SQ-4(1.5)-R	EGRE-1 1/2 SQE-4(1.5)-R	HFSC 1 1/2R AA 1 1/2R HFKSC 1 1/4R HFKSC 1 1/2R	HFESC 1 1/2R AAE 1 1/2R HFKESC 1 1/4R HFKESC 1 1/2R	EG-1 1/2S	EGE-1 1/2S
		Straight thru					EFR-1 1/2 EQ-4(1.5)-R	EFRE-1 1/2 EQE-4(1.5)-R	HFS 1 1/2R AA 1 1/2R BA/BN 1 1/4R BA/BN 1 1/2R HFKS 1 1/4R HFKS 1 1/2R	HFES 1 1/2R AAE 1 1/2R BAE/BNE 1 1/4R BAE/BNE 1 1/2R HFKES 1 1/4R HFKES 1 1/2R		

continued next page

 © Danfoss Inc. 01-07 (USCO)

R502 (Continued)												
Nominal Capacity (Tons)	Connection Type	Body Type	Danfoss				Sporlan		ALCO		Parker	
			Internal		External		Internal Model	External Model	Internal Model	External Model	Internal Model	External Model
			Model	**Code no.**	Model	**Code no.**						
2	SAE x SAE	Angleway	TY 2-2.38 Orifice 04	**068Z3212** **068-2008**	TEY 2-2.38 Orifice 04	**068Z3215** **068-2008**	Q-5(2.0)-R CR-2	FRE-2 GRE-2 QE-5(2.0)-R CRE-2	HF 2R TCL 2R AFA 2R HFK 2R	HFE 2R TCLE 2R AFAE 2R HFKE 2R	G-2S C-B(2)S N-2S	GE-2S CE-B(2)S NE-2S
		Straight thru							TCL 2R	TCLE 2R		
	ODF x ODF	Angleway	TY 2-2.38 Orifice 04	**068Z3282** **068-2095**	TEY 2-2.38 Orifice 04	**068Z3285** **068-2095**	EGR-2 SQ-5(2.0)-R SBFR-B	EGRE-2 SQE-5(2.0)-R SBFRE-B	HFSC 2R TCL 2R AA 2R HFKSC 2R	HFESC 2R TCLE 2R AAE 2R HFKESC 2R	EG-2S	EGE-2S
		Straight thru					EFR-2 EQ-5(2.0)-R EBFR-B SR-2	EFRE-2 EQE-5(2.0)-R EBFRE-B SRE-2	HFS 2R TCL 2R AA 2R BA/BN 2R HFKS 2R	HFES 2R TCLE 2R AAE 2R BAE/BNE 2R HFKES 2R	EC-B(2)S S-2S	ECE-B(2)S SE-2S
3	SAE x SAE	Angleway	TY 2-3.01 Orifice 05	**068Z3212** **068-2009**	TEY 2-3.01 Orifice 05	**068Z3215** **068-2009**	Q-6(3.0)-R BFR-C CR-2 1/2 CR-3	QE-6(3.0)-R BFRE-C CRE-3	TCL 3R AFA 3R HF 3 1/2R HFK 3 1/2R	TCLE 3R AFAE 3R HFE 3 1/2R HFKE 3 1/2R	G-2 1/2 S G-3S	GE -2 1/2 S GE-3S
		Straight thru							TCL 3R	TCLE 3R		
	ODF x ODF	Angleway	TY 2-3.01 Orifice 05	**068Z3282** **068-2096**	TEY 2-3.01 Orifice 05	**068Z3285** **068-2096**	SQ-6(3.0)-R SBFR-C	SQE-6(3.0)-R SBFRE-C	TCL 3R AA 3R HFSC 3 1/2R HFKSC 3 1/2R	TCLE 3R AAE 3R HFESC 3 1/2R HFKESC 3 1/2R		
		Straight thru					EQ-6(3.0)-R EBFR-C SR-2 1/2 SR-3	EQE-6(3.0)-R EBFRE-C SRE-2 1/2 SRE-3	TCL 3R AA 3R BA/BN 2 1/2R BA/BN 3R HFS 3 1/2R HFKS 3 1/2R	TCLE 3R AAE 3R BAE/BNE 2 1/2R BAE/BNE 3R HFES 3 1/2R HFKES 3 1/2R		

R502-Extended Capacities						
Nominal Capacity (Tons)	Connection Type	Body Type	Danfoss	Sporlan	ALCO	Parker
			External Model	External Model	External Model	External Model
2	SAE x SAE	Angleway	TEY 5-2	GRE-2	HFE 2R	GE-2S
			Orifice 01	CRE-2	TCLE 2R	CE-B(2)S
			TEY 2-2.38	BFRE-B	AFAE 2R	NE-2S
			Orifice 04	FRE-2	HFKE 2R	
		Straight thru			TCLE 2R	
	ODF x ODF	Angleway	TEY 5-2	EGRE-2	HFESC 2R	EGE-2S
			Orifice 01	SQE-4(2 1/2)-R	TCLE 2R	
			TEY 2-2.38		AAE 2R	
			Orifice 04	SBFRE-B	HFKESC 2R	
		Straight thru	TEY 5-2	EQE-4(2 1/2)-R	HFES 2R	ECE-B(2)S
			Orifice 01	EBFRE-B	TCLE 2R	SE-2S
				EFRE-2	AAE 2R	
					BAE/BNE 2R	
					HFKES 2R	
3	SAE x SAE	Angleway	TEY 5-3		HFE 3 1/2R	GE-2 1/2 S
			Orifice 02	GRE-3	TCLE 3R	GE-3S
			TEY 2-3.01	QE-5(3 1/2)-R	AFAE 3R	
			Orifice 05	CRE-3	HFKE 3 1/2R	
		Straight thru			TCLE 3R	
	ODF x ODF	Angleway	TEY 2-3.01			
			Orifice 05		AAE 2 1/2R	
			TEY 5-3		AAE 3R	
			Orifice 02	SQE-5(3 1/2)-R	HFESC 3 1/2 R	
			98145.451		98145.451	
			Orifice 01		HFKESC 3 1/2R	
		Straight thru	TEY 5-3	EFRE-3	HFES 3 1/2R	
			Orifice 02	EQE-5(3 1/2)-R	TCLE 3R	
			TEY 12-3	SRE-3	AAE 2 1/2 -3R	
			Orifice 01	SRE-4	BAE/BNE 2 1/2R	
					BAE/BNE 3R	
					98145.451	

continued next page

 © Danfoss Inc. 01-07 (USCO)

R502-Extended Capacities (Continued)						
Nominal Capacity (Tons)	Connection Type	Body Type	Danfoss	Sporlan	ALCO	Parker
			External Model	External Model	External Model	External Model
5	SAE x SAE	Angleway	TEY 5-5 Orifice 03	CRE-4 QE-6(4.8)-R	TIE 5H HFE 5R TCLE 4 1/2R	GE-4S CE-C(4)S
			TEY 2-3.68 Orifice 06			
		Straight thru			TCLE 4 1/2R	
	ODF x ODF	Angleway	TEY 5-5 Orifice 03	SBFRE-C SQE-6(4.8)-R	HFESC 5R TCLE 4 1/2R	
			TEY 12-5 Orifice 02			
			TEY 2-3.68 Orifice 06			
		Straight thru	TEY 5-5 Orifice 03	EBFRE-C SRE-4 EQE-6(4.8)-R	HFES 5R TFE 5R TCLE 4 1/2R BAE/BNE 4R	RE-6S ECE-C(4)S SE-4S
			TEY 12-5 Orifice 02			
8	SAE x SAE	Angleway	TEY 5-8 Orifice 04	CRE-6	HFE 7R TCLE 7R TCLE 8R	GE-6R
		Straight thru			TCLE 7R TCLE 8R	
	ODF x ODF	Angleway	TEY 5-8 Orifice 04		HFESC 7R TCLE 7R TCLE 8R	
			TEY 12-8 Orifice 03		TJLE 7R TJLE 9R TJR 9R	
		Straight thru	TEY 5-8 Orifice 04	SRE-6 SRE-7 EBSRE-7 1/2 ORE-9	HFES 7R TFE 7R TCLE 7R TCLE 8R TRAE+ 8R TFE 9R TJLE 7R TJLE 9R	SE-6S RE-9S
			TEY 12-8 Orifice 03			

continued next page

R502-Extended Capacities (Continued)						
Nominal Capacity (Tons)	Connection Type	Body Type	Danfoss	Sporlan	ALCO	Parker
			External Model	External Model	External Model	External Model
12	SAE x SAE	Angleway			HFE 10R HFE 13R	
		Straight thru				
	ODF x ODF	Angleway	TEY 12-12 Orifice 04		HFESC 10R TJR 12R TER 14R	
		Straight thru	TEY 12-12 Orifice 04	ORE-12	HFES 10R HFES 13R TFE 14R TRAE+ 12R TRAE+ 14R TJR 12R TER 14R	RE-12S
20	SAE x SAE	Angleway				
		Straight thru				
	ODF x ODF	Angleway	TEY 20-20 Orifice 01		TER 16R TER 21R	
		Straight thru	TEY 20-20 Orifice 01	ORE-21	TER 16R TRAE+ 20R TER 21R	RE-21S
24	SAE x SAE	Angleway				
		Straight thru				
	ODF x ODF	Angleway	TEY 55-24 Orifice 01		TER 27R	
		Straight thru	TEY 55-24 Orifice 01		TER 27R TRAE+ 30R	
40	SAE x SAE	Angleway				
		Straight thru				
	ODF x ODF	Angleway	TEY 55-40 Orifice 02		TIR 37R THR 48R THR 60R	
		Straight thru	TEY 55-40 Orifice 02	ORE-30 ORE-35 ORE-45	TIR 37R THR 48R THR 60R TRAE 35R TRAE 40R TRAE 50R	RE-30S RE-45S

© Danfoss Inc. 01-07 (USCO)

R134a

Nominal Capacity (Tons)	Connection Type	Body Type	Danfoss Internal Model	Danfoss Internal Code no.	Danfoss External Model	Danfoss External Code no.	Sporlan Internal Model	Sporlan External Model	ALCO Internal Model	ALCO External Model	Parker Internal Model	Parker External Model
1/8	SAE x SAE	Angleway	TN 2-0.11	**068Z3496**	TEN 2-0.11	**068Z3348**			AFA 1/8M	AFAE 1/8M	G-1/8J	GE-1/8J
			Orifice 0x	**068-2002**	Orifice 0x	**068-2002**						
		Straight thru							ANC 1/8M	ANCE 1/8M		
	ODF x ODF	Angleway	TN 2-0.11	**068Z3496**	TEN 2-0.11	**068Z3348**			AA 1/8M	AAE 1/8M	EG-1/8J	EGE-1/8J
			Orifice 0x	**068-2002**	Orifice 0x	**068-2002**						
		Straight thru	TUA	**068U2205**	TUAE	**068U2207**			AA 1/8M	AAE 1/8M		
			Orifice 00	**068U1030**	Orifice 00	**068U1030**			ANC 1/8M	ANCE 1/8M		
1/6	SAE x SAE	Angleway					GJ-1/6	GJE-1/6				
							FJ-1/6	FJE-1/6				
							Q-0(.17)-J	QE-0(.17)-J				
		Straight thru										
	ODF x ODF	Angleway	TUB-0.19	**068U2117**	TUBE-0.19	**068U2123**	EGJ-1/6	EGJE-1/6				
							SQ-0(.17)-J	SQE-0(.17)-J				
							SBFJ-AAA	SBFJE-AAA				
		Straight thru	TUA	**068U2205**	TUAE	**068U2207**	EFJ-1/6	EFJE-1/6				
			Orifice 01	**068U1031**	Orifice 01	**068U1031**	EQ-0(.17)-J	EQE-0(.17)-J				
			TUB-0.19	**068U2558**	TUBE-0.19	**068U2567**	EBFJ-AAA	EBFJE-AAA				
1/4	SAE x SAE	Angleway					GJ-1/4	GJE-1/4	AFA 1/4M	AFAE 1/4M	G-1/4J	GE-1/4J
			TN 2-0.23	**068Z3346**	TEN 2-0.23	**068Z3348**	FJ-1/4	FJE-1/4	HF 1/4M	HFE 1/4M	N-1/4 J	
			Orifice 00	**068-2003**	Orifice 00	**068-2003**	Q-1(.25)-J	QE-1(.25)-J	TCL 1/4M	TCLE 1/4M		
							NIJ-1/4		TI 1/4M	TIE 1/4M		
							BFJ-AAA	BFJE-AAA	HFK 1/4M	HFKE 1/4M		
		Straight thru							TCL 1/4M	TCLE 1/4M		
									ANC 1/4M	ANCE 1/4M		
	ODF x ODF	Angleway	TN 2-0.23	**068Z3383**	TEN 2-0.23	**068Z3385**			HFSC 1/4M	HFESC 1/4M	EG-1/4J	EGE-1/4J
			Orifice 00	**068-2090**	Orifice 00	**068-2090**	EGJ-1/4	EGJE-1/4	TCL 1/4M	TCLE 1/4M		
			TUB-0.27	**068U2118**	TUBE-0.27	**068U2124**	SQ-1(.25)-J	SQE-1(.25)-J	AA 1/4M	AAE 1/4M		
									HFKSC 1/4M	HFKESC 1/4M		
		Straight thru	TUA	**068U2205**	TUAE	**068U2207**			AA 1/4M	AAE 1/4M		
			Orifice 02	**068U1032**	Orifice 02	**068U1032**	EFJ-1/4	EFJE-1/4	HFS 1/4M	HFES 1/4M		
			TUB-0.27	**068U2559**	TUBE-0.27	**068U2568**	EQ-1(.25)-J	EQE-1(.25)-J	TCL 1/4M	TCLE 1/4M		
							EMC-10J	EMCE-10J	ANC 1/4M	ANCE 1/4M		
									HFKS 1/4M	HFKES 1/4M		
2/5	SAE x SAE	Angleway										
		Straight thru										
	ODF x ODF	Angleway	TUB-0.37	**068U2119**	TUBE-0.37	**068U2125**	SBFJ-AA	SBFJE-AA				
		Straight thru	TUA	**068U2205**	TUAE	**068U2207**						
			Orifice 03	**068U1033**	Orifice 03	**068U1033**	EBFJ-AA	EBFJE-AA				
			TUB-0.37	**068U2560**	TUBE-0.37	**068U2569**						

continued next page

R134a (Continued)

Nominal Capacity (Tons)	Connection Type	Body Type	Danfoss				Sporlan		ALCO		Parker	
			Internal		External		Internal Model	External Model	Internal Model	External Model	Internal Model	External Model
			Model	**Code no.**	Model	**Code no.**						
1/2	SAE x SAE	Angleway	TN 2-0.48 Orifice 01	**068Z3346** **068-2010**	TEN 2-0.48 Orifice 01	**068Z3348** **068-2010**	FJ-1/2 GJ-1/2 Q-2(.5)-J BFJ-AA NIJ-1/2	FJE-1/2 GJE-1/2 QE-2(.5)-J BFJE-AA	AFA 1/2M HF 1/2M TI 1/2M HFK 1/2M	AFAE 1/2M HFE 1/2M TIE 1/2M HFKE 1/2M	G-1/2J C-AA(1/2)J N-1/2J	GE-1/2J CE-AA(1/2)J
		Straight thru							ANC 1/2M	ANCE 1/2M		
	ODF x ODF	Angleway	TN 2-0.48 Orifice 01	**068Z3383** **0685-2091**	TEN 2-0.48 Orifice 01	**068Z3385** **068-2091**	EGJ-1/2 SQ-2(.5)-J	EGJE-1/2 SQE-2(.5)-J	HFSC 1/2M AA 1/2M	HFESC 1/2M AAE 1/2M	EG-1/2J	EGE-1/2J
			TUB-0.56	**068U2120**	TUBE-0.56	**068U2126**	SBFJ-AA	SBFJE-AA	HFKSC 1/2M	HFKESC 1/2M	I-1/2J	
		Straight thru	TUA Orifice 04	**068U2205** **068U1034**	TUAE Orifice 04	**068U2207** **068U1034**	EFJ-1/2 EQ-2(.5)-J	EFJE-1/2 EQE-2(.5)-J	AA 1/2M BA/BN 1/2M	AAE 1/2M BAE/BNE 1/2M	EC-AA(1/2)J	ECE-AA(1/2)J
			TUB-0.56	**068U2561**	TUBE-0.56	**068U2570**	EBFJ-AA EMC-11J	EBFJE-AA EMCE-11J	HFS 1/2M ANC 1/2M HFKS 1/2M	HFES 1/2M ANCE 1/2M HFKES 1/2M	S-1/2J	SE-1/2J
3/4	SAE x SAE	Angleway	TN 2-0.68 Orifice 02	**068Z3346** **068-2015**	TEN 2-0.68 Orifice 02	**068Z3348** **068-2015**	BFJ-A	BFJE-A	HF 3/4M TCL 3/4M TI 3/4M AFA 3/4M HFK 3/4M	HFE 3/4M TCLE 3/4M TIE 3/4M AFAE 3/4M HFKE 3/4M		
		Straight thru							TCL 3/4M ANC 3/4M	TCLE 3/4M ANCE 3/4M		
	ODF x ODF	Angleway	TN 2-0.68 Orifice 02	**068Z3383** **068-2092**	TEN 2-0.68 Orifice 02	**068Z3385** **068-2092**	SBFJ-A	SBFJE-A	HFSC 3/4M TCL 3/4M	HFESC 3/4M TCLE 3/4M		
			TUB-0.74	**068U2121**	TUBE-0.74	**068U2127**			AA 3/4M HFKSC 3/4M	AAE 3/4M HFKESC 3/4M		
		Straight thru	TUA Orifice 05	**068U2205** **068U1035**	TUAE Orifice 05	**068U2207** **068U1035**	EBFJ-A	EBFJE-A	AA 3/4M BA/BN 3/4M	AAE 3/4M BAE/BNE 3/4M		
			TUB-0.74	**068U2562**	TUBE-0.74	**068U2571**			HFS 3/4M TCL 3/4M ANC 3/4M HFKS 3/4M	HFES 3/4M TCLE 3/4M ANCE 3/4M HFKES 3/4M		

continued next page

 © Danfoss Inc. 01-07 (USCO)

R134a (Continued)												
Nominal Capacity (Tons)	Connection Type	Body Type	Danfoss				Sporlan		ALCO		Parker	
			Internal		External		Internal Model	External Model	Internal Model	External Model	Internal Model	External Model
			Model	**Code no.**	Model	**Code no.**						
1	SAE x SAE	Angleway	TN 2-1.22 Orifice 03	**068Z3346** **068-2006**	TEN 2-1.22 Orifice 03	**068Z3348** **068-2006**	FJ-1 GJ-1 Q-3(1.0)-J BFJ-A NIJ-1	FJE-1 GJE-1 QE-3(1.0)-J BFJE-A	AFA 1M HF 1M TI 1 1/4M HFK 1M	AFAE 1M HFE 1M TIE 1 1/4M HFKE 1M	G-1J C-A(1)J	GE-1J CE-A(1)J
		Straight thru							ANC 1M	ANCE 1M		
	ODF x ODF	Angleway	TN 2-1.22 Orifice 03 TUB-1.12	**068Z3383** **068-2093** **068U2122**	TEN 2-1.22 Orifice 03 TUBE-1.12	**068Z3385** **068-2093** **068U2128**	EGJ-1 SQ-3(1.0)-J	EGJE-1 SQE-3(1.0)-J	HFSC 1M AA 1M HFKSC 1M	HFESC 1M AAE 1M HFKESC 1M	EG-1J I-1J	EGE-1J
		Straight thru	TUA Orifice 06 TUB-1.12	**068U2205** **068U1036** **068U2563**	TUAE Orifice 06 TUBE-1.12	**068U2207** **068U1036** **068U2572**	EFJ-1 EQ-3(1.0)-J EMC-12J EMC-13J	EFJE-1 EQE-3(1.0)-J EMCE-12J EMCE-13J	AA 1M BA/BN 1M HFS 1M ANC 1M HFKS 1M	AAE 1M BAE/BNE 1M HFES 1M ANCE 1M HFKES 1M	EC-A(1)J S-1J	ECE-A(1)J SE-1J
1 1/2	SAE x SAE	Angleway					FJ-1 1/2 GJ-1 1/2 Q-4(1.5)-J BFJ-B	FJE-1 1/2 GJE-1 1/2 QE-4(1.5)-J BFJE-B	HF 1 1/2M TCL 1 1/2M AFA 1 1/2M HFK 1 1/2M	HFE 1 1/2M TCLE 1 1/2M AFAE 1 1/2M HFKE 1 1/2M	G-1 1/2J	GE-1 1/2J
		Straight thru							TCL 1 1/2M ANC 1 1/2M	TCLE 1 1/2M ANCE 1 1/2M		
	ODF x ODF	Angleway	TUB-1.49	**068U2033**	TUBE-1.49	**068U2024**	EGJ-1 1/2 SQ-4(1.5)-J SBFJ-B	EGJE-1 1/2 SQE-4(1.5)-J SBFJE-B	HFSC 1 1/2M TCL 1 1/2M AA 1 1/2M HFKSC 1 1/2M	HFESC 1 1/2M TCLE 1 1/2M AAE 1 1/2M HFKESC 1 1/2M	EG-1 1/2J	EGE-1 1/2J
		Straight thru	TUA Orifice 07 TUB-1.49	**068U2205** **068U1037** **068U2564**	TUAE Orifice 07 TUBE-1.49	**068U2207** **068U1037** **068U2573**	EFJ-1 1/2 EQ-4(1.5)-J EBFJ-B	EFJE-1 1/2 EQE-4(1.5)-J EBFJE-B	AA 1 1/2M BA/BN 1 1/2M HFS 1 1/2M TCL 1 1/2M HFKS 1 1/2M	AAE 1 1/2M BAE/BNE 1 1/2M HFES 1 1/2M TCLE 1 1/2M HFKES 1 1/2M		
2	SAE x SAE	Angleway	TN 2-1.8 Orifice 04	**068Z3346** **068-2007**	TEN 2-1.8 Orifice 04	**068Z3348** **068-2007**	CJ-2 Q-5(2.0)-J	FJE-2 GJE-2 QE-5(2.0)-J	AFA 2M HF 1 3/4M TI 2M HFK 1 3/4M	AFAE 2M HFE 1 3/4M TIE 2M HFKE 1 3/4M	G-2J C-B(2)J N-2J	GE-2J CE-B(2)J NE-2J
		Straight thru							ANC 2M	ANCE 2M		
	ODF x ODF	Angleway	TN 2-1.8 Orifice 04	**068Z3383** **068-2094**	TEN 2-1.8 Orifice 04	**068Z3385** **068-2094**	SQ-5(2.0)-J	EGJE-2 SQE-5(2.0)-J	HFSC 1 3/4M AA 2M HFKSC 1 3/4M	HFESC 1 3/4M AAE 2M HFKESC 1 3/4M	EG-2J	EGE-2J
		Straight thru					EQ-5(2.0)-J SJ-2	EFJE-2 EQE-5(2.0)-J SJE-2	AA 2M BA/BN 2M HFS 1 3/4M ANC 2M HFKS 1 3/4M	AAE 2M BAE/BNE 2M HFES 1 3/4M ANCE 2M HFKES 1 3/4M	EC-B(2)J S-2J	ECE-B(2)J SE-2J

continued next page

R134a (Continued)

Nominal Capacity (Tons)	Connection Type	Body Type	Danfoss				Sporlan		ALCO		Parker	
			Internal		External		Internal Model	External Model	Internal Model	External Model	Internal Model	External Model
			Model	**Code no.**	Model	**Code no.**						
2 1/2	SAE x SAE	Angleway	TN 2-2.29	**068Z3346**	TEN 2-2.29	**068Z3348**	CJ-2 1/2	CJE 2 1/2	AFA 2 1/2M	AFAE 2 1/2M	G-2 1/2J	GE-2 1/2J
							Q-6(2.5)-J	QE-6(2.5)-J	HF 2 1/2M	HFE 2 1/2M		
									TCL 2 1/2M	TCLE 2 1/2M		
			Orifice 05	**068-2008**	Orifice 05	**068-2008**	BFJ-C	BFJE-C	TI 2 1/2M	TIE 2 1/2M		
									HFK 2 1/2M	HFKE 2 1/2M		
		Straight thru							TCL 2 1/2M ANC 2 1/2M	TCLE 2 1/2M ANCE 2 1/2M		
	ODF x ODF	Angleway	TN 2-2.29	**068Z3383**	TEN 2-2.29	**068Z3385**			HFSC 2 1/2M	HFESC 2 1/2M		
			Orifice 05	**068-2095**	Orifice 05	**068-2095**	SQ-6(2.5)-J	SQE-6(2.5)-J	TCL 2 1/2M	TCLE 2 1/2M		
			TUB-2.23	**068U2034**	TUBE-2.23	**068U2025**	SBFJ-C	SBFJE-C	AA 2 1/2M	AAE 2 1/2M		
									HFKSC 2 1/2M	HFKESC 2 1/2M		
		Straight thru	TUA	**068U2205**	TUAE	**068U2207**			AA 2 1/2M	AAE 2 1/2M		
			Orifice 08	**068U1038**	Orifice 08	**068U1038**	EQ-6(2.5)-J	EQE-6(2.5)-J	BA/BN 2 1/4M	BAE/BNE 2 1/4M		
			TUB-2.23	**068U2565**	TUBE-2.23	**068U2574**	SJ-2 1/2	SJE-2 1/2	HFS 2 1/2M	HFES 2 1/2M		
							EBFJ-C	EBFJE-C	TCL 2 1/2M	TCLE 2 1/2M		
									ANC 2 1/2M	ANCE 2 1/2M		
									HFKS 2 1/2M	HFKES 2 1/2M		
3	SAE x SAE	Angleway	TN 2-2.8	**068Z3346**	TEN 2-2.8	**068Z3348**			TCL 3 1/2M	TCLE 3 1/2M	G-3J	GE-3J
							CJ-3	CJE-3	TI 3M	TIE 3M	C-C(3)J	CE-C(3)J
			Orifice 06	**068-2009**	Orifice 06	**068-2009**			AFA 3M	AFAE 3M		
		Straight thru							ANC 3M	ANCE 3M		
									TCL 3 1/2M	TCLE 3 1/2M		
	ODF x ODF	Angleway	TN 2-2.8	**068Z3383**	TEN 2-2.8	**068Z3385**						
			Orifice 06	**068-2096**	Orifice 06	**068-2096**			TCL 3 1/2M	TCLE 3 1/2M		
			TUB-3.32	**068U2035**	TUBE-3.32	**068U2026**			AA 3M	AAE 3M		
		Straight thru	TUA	**068U2205**	TUAE	**068U2207**			ANC 3M	ANCE 3M		
			Orifice 09	**068U1039**	Orifice 09	**068U1039**			AA 3M	AAE 3M	EC-C(3)J	ECE-C(3)J
			TUB-3.32	**068U2566**	TUBE-3.32	**068U2575**	SJ-3	SJE-3	BA/BN 3M	BAE/BNE 3M	S-3J	SE-3J
					TCAE- 3.33	**068U4281**			TCL 3 1/2M	TCLE 3 1/2M		
					Orifice 01	**068U4100**						
					TCBE- 3.33	**068U4203**						

© Danfoss Inc. 01-07 (USCO)

R134a-Extended Capabilities						
Nominal Capacity (Tons)	Connection Type	Body Type	Danfoss	Sporlan	ALCO	Parker
			External Model	External Model	External Model	External Model
4	SAE x SAE	Angleway	TEN 5-3.7 Orifice 01	CJE-3 BFJE-C	HFE 4M TCLE 3 1/2M AFAE 4M HFKE 4M	GE-3J CE-C(3)J
		Straight thru			TCLE 3 1/2M ANCE 4M	
	ODF x ODF	Angleway	TEN 5-3.7 Orifice 01	SBFJE-C	HFESC 4M TCLE 3 1/2M AAE 4M HFKESC 4M	
		Straight thru	TEN 5-3.7 Orifice 01 TCAE- 3.33 Orifice 01	EBFJE-C SJE-3	AAE 4M ANCE 4M BAE/BNE 3 1/2M HFES 4M	ECE-C(3)J SE-3V
			TCAE- 4.21 Orifice 02		TCLE 3 1/2M HFKES 4M	
			TCBE- 3.33 TCBE- 4.21			
5	SAE x SAE	Angleway	TEN 5-5.4 98145.451	CJE-5	HFE 6M 98145.451	GE-5J
		Straight thru			TCLE 5 1/2M	
	ODF x ODF	Angleway	TEN 5-5.4 Orifice 02		HFESC 6M TCLE 5 1/2M	
			TEN 12-4.7 Orifice 01			
		Straight thru	TEN 5-5.4 Orifice 02	EBSJE-5 SJE-5 SJE-6	HFES 6M TFE 6M TCLE 5 1/2M BAE/BNE 4 1/4M	SE-5J RE-6J
			TEN 12-4.7 Orifice 01			
			TCAE- 5.41 Orifice 03			
			TCBE- 5.41 TRE 10-5N			

continued next page

R134a-Extended Capabilities (Continued)						
Nominal Capacity (Tons)	Connection Type	Body Type	Danfoss	Sporlan	ALCO	Parker
			External Model	External Model	External Model	External Model
8	SAE x SAE	Angleway	TEN 5-8.3 Orifice 03		HFE 7 1/2M TCLE 7 1/2 M TCLE 9M	
		Straight thru			TCLE 7 1/2M TCLE 9M	
	ODF x ODF	Angleway	TEN 5-8.3 98145.451		HFESC 7 1/2M 98145.451	
			TEN 12-7.7 Orifice 02		TCLE 9M TJLE 9M	
		Straight thru	TEN 5-8.3 Orifice 03	EBSJE-7	TRAE+ 9M TFE 8M	
			TEN 12-7.7 Orifice 02	EBSJE-7 OJE-9	HFES 7 1/2M TCLE 7 1/2M	RE-9J
			TRE 10-7N TRE 20-7N		TCLE 9M TJLE 9M	
11	SAE x SAE	Angleway	TEN 5-11.4 Orifice 04		HFE 11M	
		Straight thru				
	ODF x ODF	Angleway	TEN 5-11.4 Orifice 04		HFESC 11M TJLE 11M	
			TEN 12-11.4 Orifice 03		TJR 11M	
		Straight thru	TEN 5-11.4 Orifice 04	OJE-12	HFES 11M TFE 10M	RE-12J
			TEN 12-11.4 Orifice 03		TJLE 11M TJR 11M	
			TRE 20-9N TRE 20-11N			
15	SAE x SAE	Angleway			HFE 14M	
		Straight thru				
	ODF x ODF	Angleway	TEN 12-15 Orifice 04		HFESC 14M TJR 13M TER 16M	
		Straight thru		OJE-16	HFES 14M	RE-16J
			TEN 12-15 Orifice 04		TRAE+ 13M TRAE+ 14M	
			TRE 20-14N TRE 40-14N		TFE 15M TJR 13M TER 16M	

continued next page

 © Danfoss Inc. 01-07 (USCO)

R134a-Extended Capabilities (Continued)						
Nominal Capacity (Tons)	Connection Type	Body Type	Danfoss	Sporlan	ALCO	Parker
			External Model	External Model	External Model	External Model
18	SAE x SAE	Angleway				
		Straight thru				
	98145.451	98145.451	98145.451 Orifice 01		98145.451	
		Straight thru	TEN 20-18 Orifice 01	OEJ-23	TRAE+ 22M TER 19M	RE-23J
			TRE 40-18N TRE 40-21N			
41	SAE x SAE	Angleway				
		Straight thru				
	ODF x ODF	Angleway	TEN 55-41 Orifice 01		TER 25M TER 31M	
		Straight thru	TEN 55-41 Orifice 01	OJE-32 OJE-40	TRAE+ 30M TRAE 40M TER 25M TER 31M	RE-40J
			TRE 40-28N TRE 80-25N TRE 80-39N			
62	SAE x SAE	Angleway				
		Straight thru				
	ODF x ODF	Angleway	TEN 55-62 Orifice 02		TIR 45M THR 55M THR 68M TMR 68M	
		Straight thru	TEN 55-62 Orifice 02		TRAE 45M TRAE 50M TIR 45M	
			TRE 80-56N		THR 55M THR 68M TMR 68M	

R404A / R507

Nominal Capacity (Tons)	Connection Type	Body Type	Danfoss				Sporlan		ALCO		Parker	
			Internal		External		Internal Model	External Model	Internal Model	External Model	Internal Model	External Model
			Model	**Code no.**	Model	**Code no.**						
1/8	SAE x SAE	Angleway					FS-1/8	FSE-1/8	HF 1/8	HFE 1/8	G-1/8S	GE-1/8S
			TS 2-0.12		TSE 2-0.12		GS-1/8	GSE-1/8	AFA 1/8	AFAE 1/8		
			Orifice 0X		Orifice 0X		NIS-1/8		HFK 1/8	HFKE 1/8		
		Straight thru										
1/5	ODF x ODF	Angleway	TUB-0.13		TUBE-0.13		EGS-1/8	EGSE-1/8	HFSC 1/8	HFESC 1/8	EG-1/8S	EGE-1/8S
			TS 2-0.12		TSE 2-0.12				AA 1/8	AAE 1/8		
			Orifice 0X		Orifice 0X				HFKSC 1/8	HFKESC 1/8		
		Straight thru	TUA	**068U2285**	TUAE	**068U2287**	EFS-1/8	EFSE-1/8	AA 1/8	AAE 1/8		
			Orifice 00	**068U1030**	Orifice 00	**068U1030**			HFS 1/8	HFS 1/8		
			TUB-0.13		TUBE-0.13				HFKS 1/8	HFKES 1/8		
	SAE x SAE	Angleway					GS-1/6	GSE-1/6	TI 1/6	TIE 1/6		
			TS 2-0.24	**068Z3400**	TES 2-0.24	**068Z3403**	FS-1/6	FSE-1/6				
			Orifice 00	**068-2003**	Orifice 00	**068-2003**	Q-0(.17)-S	QE-0(.17)-S				
							BFS-AAA	BFSE-AAA				
		Straight thru										
	ODF x ODF	Angleway	TS 2-0.24	**068Z3414**	TES 2-0.24	**068Z3415**	EGS-1/6	EGSE-1/6				
			Orifice 00	**068-2090**	Orifice 00	**068-2090**	SQ-0(.17)-S	SQE-0(.17)-S				
			TUB-0.19	**068U2129**	TUBE-0.19	**068U2135**	SBFS-AAA	SBFSE-AAA				
		Straight thru	TUA	**068U2285**	TUAE	**068U2287**	EFS-1/6	EFSE-1/6				
			Orifice 01	**068U1031**	Orifice 01	**068U1031**	EQ-0(.17)-S	EQE-0(.17)-S				
			TUB-0.19	**068U2594**	TUBE-0.19	**068U2603**	EBFS-AAA	EBFSE-AAA				
1/4	SAE x SAE	Angleway					GS-1/4 FS-1/4 Q-1(.25)-S NIS-1/4	GSE-1/4 FSE-1/4 QE-1(.25)-S	AFA 1/4 HF 1/4 TCL 1/4 TI 1/3 HFK 1/4	AFAE 1/4 HFE 1/4 TCLE 1/4 TIE 1/3 HFKE 1/4	G-1/4S N-1/4 S	GE-1/4S
		Straight thru							TCL 1/4	TCLE 1/4		
	ODF x ODF	Angleway	TUB-0.28	**068U2130**	TUBE-0.28	**068U2136**	EGS-1/4 SQ-1(.25)-S	EGSE-1/4 SQE-1(.25)-S	HFSC 1/4 TCL 1/4 AA 1/4 HFKSC 1/7	HFESC 1/4 TCLE 1/4 AAE 1/4 HFKESC 1/4	EG-1/4S	EGE-1/4S
		Straight thru	TUA	**068U2285**	TUAE	**068U2287**			AA 1/4	AAE 1/4		
			Orifice 02	**068U1032**	Orifice 02	**068U1032**	EFS-1/4	EFSE-1/4	BA/BN 1/4	BAE/BNE 1/4		
			TUB-0.28	**068U2595**	TUBE-0.28	**068U2604**	EQ-1(.25)-S	EQE-1(.25)-S	HFS 1/4	HFES 1/4		
							EMC-10S	EMCE-10S	TCL 1/4	TCLE 1/4		
									HFKS 1/4	HFKES 1/4		
2/5	SAE x SAE	Angleway	TS 2-0.50	**068Z3400**	TES 2-0.50	**068Z3403**	BFS-AA	BFSE-AA				
			Orifice 01	**068-2010**	Orifice 01	**068-2010**						
		Straight thru										
	ODF x ODF	Angleway	TS 2-0.50	**068Z3414**	TES 2-0.50	**068Z3415**	SBFS-AA	SBFSE-AA				
			Orifice 01	**068-2091**	Orifice 01	**068-2091**						
			TUB-0.38	**068U2131**	TUBE-0.38	**068U2137**						
		Straight thru	TUA	**068U2285**	TUAE	**068U2287**	EBFS-AA	EBFSE-AA				
			Orifice 03	**068U1033**	Orifice 03	**068U1033**						
			TUB-0.38	**068U2596**	TUBE-0.38	**068U2605**						

continued next page

 © Danfoss Inc. 01-07 (USCO)

R404A / R507 (Continued)

Nominal Capacity (Tons)	Connection Type	Body Type	Danfoss Internal Model	Danfoss Internal Code no.	Danfoss External Model	Danfoss External Code no.	Sporlan Internal Model	Sporlan External Model	ALCO Internal Model	ALCO External Model	Parker Internal Model	Parker External Model
1/2	SAE x SAE	Angleway	TS 2-0.73	**068Z3400**	TES 2-0.73	**068Z3403**	FS-1/2	FSE-1/2	AFA 1/2	AFAE 1/2	G-1/2S	GE-1/2S
			Orifice 02	**068-2015**	Orifice 02	**068-2015**	GS-1/2	GSE-1/2	HF 1/2	HFE 1/2	C-AA(1/2)S	CE-AA(1/2)S
							Q-2(.5)-S	QE-2(.5)-S	TCL 1/2	TCLE 1/2	N-1/2S	
							NIS-1/2		TI 1/2	TIE 1/2		
									HFK 1/2	HFKE 1/2		
		Straight thru							TCL 1/2	TCLE 1/2		
	ODF x ODF	Angleway	TS 2-0.73	**068Z3414**	TES 2-0.73	**068Z3415**			HFSC 1/2	HFESC 1/2		
			Orifice 02	**068-2092**	Orifice 02	**068-2092**	EGS-1/2	EGSE-1/2	TCL 1/2	TCLE 1/2	EG-1/2S	EGE-1/2S
			TUB-0.58	**068U2132**	TUBE-0.58	**068U2138**	SQ-2(.5)-S	SQE-2(.5)-S	AA 1/2	AAE 1/2	I-1/2S	
									HFKSC 1/2	HFKESC		
		Straight thru	TUA	**068U2285**	TUAE	**068U2287**			AA 1/2	AAE 1/2		
			Orifice 04	**068U1034**	Orifice 04	**068U1034**	EFS-1/2	EFSE-1/2	BA/BN 1/2	BAE/BNE 1/2	EC-AA(1/2)S	ECE-AA(1/2)S
			TUB-0.58	**068U2597**	TUBE-0.58	**068U2606**	EQ-2(.5)-S	EQE-2(.5)-S	HFS 1/2	HFES 1/2	S-1/2S	SE-1/2S
							EMC-11S	EMCE-11S	TCL 1/2	TCLE 1/2		
3/4	SAE x SAE	Angleway							TI 3/4	TIE 3/4		
									AFA 3/4	AFAE 3/4		
		Straight thru										
	ODF x ODF	Angleway	TUB-0.76	**068U2133**	TUBE-0.76	**068U2139**	SBFS-A	SBFSE-A	AA 3/4	AAE 3/4		
		Straight thru	TUA	**068U2285**	TUAE	**068U2287**	EBFS-A	EBFSE-A	AA 3/4	AAE 3/4		
			Orifice 05	**068U1035**	Orifice 05	**068U1035**						
			TUB-0.76	**068U2598**	TUBE-0.76	**068U2607**						
1	SAE x SAE	Angleway					FS-1	FSE-1				
			TS 2-1.29	**068Z3400**	TES 2-1.29	**068Z3403**	GS-1	GSE-1	AFA 1	AFAE 1	G-1S	GE-1S
			Orifice 03	**068-2006**	Orifice 03	**068-2006**	Q-3(1.0)-S	QE-3(1.0)-S	HF 1	HFE 1	C-A(1)S	CE-A(1)S
							NIS-1		TCL 1	TCLE 1		
							BFS-A	BFSE-A	TI 1	TIE 1		
		Straight thru							TCL 1	TCLE 1		
	ODF x ODF	Angleway	TS 2-1.29	**068Z3414**	TES 2-1.29	**068Z3415**	EGS-1	EGSE-1				
			Orifice 03	**068-2093**	Orifice 03	**068-2093**	SQ-3(1.0)-S	SQE-3(1.0)-S	HFSC 1	HFESC 1	EG-1S	EGE-1S
			TUB-1.15	**068U2134**	TUBE-1.15	**068U2185**			TCL 1	TCLE 1	I-1S	
									AA 1	AAE 1		
		Straight thru	TUA	**068U2285**	TUAE	**068U2287**	EFS-1	EFSE-1	AA 1	AAE 1		
			Orifice 06	**068U1036**	Orifice 06	**068U1036**	EQ-3(1.0)-S	EQE-3(1.0)-S	BA/BN 1	BAE/BNE 1	EC-A(1)S	ECE-A(1)S
			TUB-1.15	**068U2599**	TUBE-1.15	**068U2608**	EMC-12S	EMCE-12S	HFS 1	HFES 1	S-1S	SE-1S
							EMC-13S	EMCE-13S	TCL 1	TCLE 1		

continued next page

R404A / R507 (Continued)

Nominal Capacity (Tons)	Connection Type	Body Type	Danfoss				Sporlan		ALCO		Parker	
			Internal		External		Internal Model	External Model	Internal Model	External Model	Internal Model	External Model
			Model	**Code no.**	Model	**Code no.**						
1 1/2	SAE x SAE	Angleway	TS 2-1.93 Orifice 04	**068Z3400** **068-2007**	TES 2-1.93 Orifice 04	**068Z3403** **068-2007**	FS-1 1/2 GS-1 1/2 Q-4(1.5)-S BFS-B	FSE-1 1/2 GSE-1 1/2 QE-4(1.5)-S BFSE-B	AFA 1 1/2 HF 1 1/2 TI 1 1/2	AFAE 1 1/2 HFE 1 1/2 TIE 1 1/2	G-1 1/2S	GE-1 1/2S
		Straight thru										
	ODF x ODF	Angleway	TS 2-1.93 Orifice 04 TUB-1.53	**068Z3414** **068-2094** **068U2100**	TES 2-1.93 Orifice 04 TUBE-1.53	**068Z3415** **068-2094** **068U2109**	EGS-1 1/2 SQ-4(1.5)-S SBFS-B	EGSE-1 1/2 SQE-4(1.5)-S SBFSE-B	HFSC 1 1/2 AA 1 1/4	HFESC 1 1/2 AAE 1 1/4	EG-1 1/2S	EGE-1 1/2S
		Straight thru	TUA Orifice 07 TUB-1.53	**068U2285** **068U1037** **068U2600**	TUAE Orifice 07 TUBE-1.53	**068U2287** **068U1037** **068U2609**	EFS-1 1/2 EQ-4(1.5)-S EBFS-B	EFSE-1 1/2 EQE-4(1.5)-S EBFSE-B	AA 1 1/4 BA/BN 1 1/4 BA/BN 1 1/2 HFS 1 1/2	AAE 1 1/4 BAE/BNE 1 1/4 BAE/BNE 1 1/2 HFES 1 1/2		
2	SAE x SAE	Angleway	TS 2-2.43 Orifice 05	**068Z3400** **068-2008**	TES 2-2.43 Orifice 05	**068Z3403** **068-2008**	CS-2 Q-5(2.0)-S	FSE-2 GSE-2 QE-5(2.0)-S	AFA 2 HF 2 TCL 2 TI 2	AFAE 2 HFE 2 TCLE 2 TIE 2	G-2S C-B(2)S N-2S	GE-2S CE-B(2)S NE-2S
		Straight thru							TCL 2	TCLE 2		
	ODF x ODF	Angleway	TS 2-2.43 Orifice 05 TUB-2.29	**068Z3414** **068-2095** **068U2101**	TES 2-2.43 Orifice 05 TUBE-2.29	**068Z3415** **068-2095** **068U2110**	SQ-5(2.0)-S	EGSE-2 SQE-5(2.0)-S	HFSC 2 TCL 2 AA 2	HFESC 2 TCLE 2 AAE 2	EG-2S	EGE-2S
		Straight thru	TUA Orifice 08 TUB-2.29	**068U2285** **068U1038** **068U2601**	TUAE Orifice 08 TUBE-2.29	**068U2287** **068U1038** **068U2610**	EQ-5(2.0)-S SS-2	EFSE-2 EQE-5(2.0)-S SSE-2	AA 2 BA/BN 2 HFS 2 TCL 2	AAE 2 BAE/BNE 2 HFES 2 TCLE 2	EC-B(2)S S-2S	ECE-B(2)S SE-2S
2 1/2	SAE x SAE	Angleway	TS 2-2.97 Orifice 06	**068Z3400** **068-2009**	TES 2-2.97 Orifice 06	**068Z3403** **068-2009**			TI 2 1/2 AFA 2 1/4 AFA 2 1/2	TIE 2 1/2 AFAE 2 1/4 AFAE 2 1/2		
		Straight thru										
	ODF x ODF	Angleway	TS 2-2.97 Orifice 06	**068Z3414** **068-2096**	TES 2-2.97 Orifice 06	**068Z3415** **068-2096**			AA 2 1/4 AA 2 1/2	AAE 2 1/4 AAE 2 1/2		
		Straight thru							AA 2 1/4 AA 2 1/2 BA/BN 2 1/2	AAE 2 1/4 AAE 2 1/2 BAE/BNE 2 1/2		
3	SAE x SAE	Angleway	TS 2-2.97 Orifice 06	**068Z3400** **068-2009**	TES 2-2.97 Orifice 06	**068Z3403** **068-2009**	BFS-C CS-3 Q-6(3)-S	BFSE-C CSE-3 QE-6(3)-S	AFA 3 1/2 TCL 3 TI 3	AFAE 3 1/2 TCLE 3 TIE 3	G-3S HF 3 1/2S	GE-3S HFE 3 1/2S
		Straight thru							TCL 3	TCLE 3		
	ODF x ODF	Angleway	TS 2-2.97 Orifice 06 TUB-3.41	**068Z3414** **068-2096** **068U2102**	TES 2-2.97 Orifice 06 TUBE-3.41	**068Z3415** **068-2096** **068U2111**	SBFS-C SQ-6(3)-S	SBFSE-C SQE-6(3)-S	TCL 3 AA 3 1/2	TCLE 3 AAE 3 1/2		
		Straight thru	TUA Orifice 09 TUB-3.41	**068U2285** **068U1039** **068U2602**	TUAE Orifice 09 TUBE-3.41 TCAE -3.40 Orifice 01 TCBE- 3.40	**068U2287** **068U1039** **068U2611** **068U4281** **068U4100** **068U4203**	EQ-6(3)-S EBFS-C SS-3	EQE-6(3)-S EBSFSE-C SSE-3	BA/BN 3 AA 3 1/2 TCL 3	BAE/BNE 3 AAE 3 1/2 TCLE 3		

© Danfoss Inc. 01-07 (USCO)

R404A / R507-Extended Capabilities						
Nominal Capacity (Tons)	Connection Type	Body Type	Danfoss	Sporlan	ALCO	Parker
			External Model	External Model	External Model	External Model
4	SAE x SAE	Angleway	TES 5-3.7 Orifice 01	CSE-4	HFE 3 1/2 AFAE 3 1/2	GE-4S CE-C(4)S
		Straight thru				
	ODF x ODF	Angleway	TES 5-3.7 Orifice 01		HFESC 3 1/2 AAE 3 1/2	
			TES 12-4.2 Orifice 01			
		Straight thru	TES 5-3.7 Orifice 01	SSE-4	AAE 3 1/2 BAE/BNE 4 HFES 3 1/2	ECE-C(4)S SE-4S
			TES 12-4.2 Orifice 01			
			TCAE -3.40 Orifice 01			
			TCAE -4.31 Orifice 02			
			TCBE- 3.40 TCBE- 4.31			
5	SAE x SAE	Angleway	TES 5-5.0 Orifice 02	CSE-6	HFE 5 TCLE 4 1/2	
		Straight thru			TCLE 4 1/2	
	ODF x ODF	Angleway	TES 5-5.0 Orifice 02		HFESC 5 TCLE 4 1/2	
		Straight thru	TES 5-5.0 Orifice 02	EBSSE-6 SSE-6	HFES 5 TFE 5 TCLE 4 1/2	
			TCAE -5.44 Orifice 03			
			TCBE- 5.44			
7	SAE x SAE	Angleway	TES 5-7.2 Orifice 03		HFE 7 TCLE 7 TCLE 8	GE-6S
		Straight thru			TCLE 7 TCLE 8	
	ODF x ODF	Angleway	TES 5-7.2 Orifice 03		HFESC 7 TCLE 7	
			TES 12-6.8 Orifice 02		TCLE 8 TJLE 7	
		Straight thru	TES 5-7.2 Orifice 03	EBSSE-7 1/2 SSE-7	HFES 7 TRAE+ 8 TFE 7 TCLE 7 TCLE 8 TJLE 7	SE-6S RE-6S
			TES 12-6.8 Orifice 02			
			TRE 10-8S			

continued next page

R404A / R507-Extended Capabilities Continued						
Nominal Capacity (Tons)	Connection Type	Body Type	Danfoss	Sporlan	ALCO	Parker
			External Model	External Model	External Model	External Model
10	SAE x SAE	Angleway	TES 5-10.3 Orifice 04		HFE 10	
		Straight thru				
	ODF x ODF	Angleway	TES 5-10.3 Orifice 04		HFESC 10 TJLE 9	
			TES 12-10 Orifice 03		TJR 9	
		Straight thru	TES 5-10.3 Orifice 04	OSE-9	HFESC 10 TFE 9	RE-9S
			TES 12-10 Orifice 03 TRE 20-8S TRE 20-10S		TJLE 9 TJR 9	
13	SAE x SAE	Angleway			HFE 13	
		Straight thru				
	ODF x ODF	Angleway	TES 12-13.4 Orifice 04		TJR 12 TER 14	
		Straight thru	TES 12-13.4 Orifice 04	OSE-12	HFES 13 TRAE+ 12 TFE 14 TJR 12	RE-12S
			TRE 20-12S		TER 14	
16	SAE x SAE	Angleway				
		Straight thru				
	ODF x ODF	Angleway	TES 20-16.7 Orifice 01		TER 16 TER 21	
		Straight thru	TES 20-16.7 Orifice 01	OSE-21	TRAE+ 14 TRAE+ 20	RE-21S
			TRE 20-16S TRE 40-20S TRE 40-25S		TER 16 TER 21	
37	SAE x SAE	Angleway				
		Straight thru				
	ODF x ODF	Angleway	TES 55-37 Orifice 01		TER 27 TIR 37	
		Straight thru	TES 55-37 Orifice 01	OSE-30 OSE-35	TRAE+ 30 TRAE 35	
			TRE 40-30S TRE 40-40S TRE 80-40S		TRAE 40 TER 27 TIR 37	RE-30S
56	SAE x SAE	Angleway				
		Straight thru				
	ODF x ODF	Angleway	TES 55-56 Orifice 02		THR 48 THR 60 TMR 60	
		Straight thru	TES 55-56 Orifice 02	OSE-45	TRAE 50 THR 48	RE-45S
			TRE 80-55S TRE 80-70S		THR 60 TMR 60	

 © Danfoss Inc. 01-07 (USCO)

Normally Closed

Danfoss					Sporlan		ALCO		Parker	
Solenoid Valve Model	Capacity Tons R-22 (Liquid)	Danfoss Port Size	**Danfoss Code Number**	Connection Size	Solenoid Valve Model	Capacity Tons R-22 (Liquid)	Solenoid Valve Model	Capacity Tons R-22 (Liquid)	Solenoid Valve Model	Capacity Tons R-22 (Liquid)
EVR 2	1.17	3/32	**032F7100**	1/4 ODF Solder			100RB 2S2 100RB2T2		RB1E2	
			032F7101	1/4 SAE Flare			100RB 2F2		RB1F2	
EVR 3	2.03	1/8	**032F7105**	1/4 ODF Solder	E3S120 A3S1		100RB 2S2		RB1E2	
			032F1155	1/4 SAE Flare			100RB 2F2		RB1F2	
			032F1157	3/8 ODF Solder	E3S130 A3S1 A3P1		100RB 2S3 200RB3T3		RB1E3	
			032F1154	3/8 SAE Flare	A3F1		100RB 2F3			
EVR 4	4.15	5/32	**032F7110**	3/8 ODF Solder	E5S130		200RB 2T3			
			032F7112	3/8 SAE Flare						
			032F7111	1/2 ODF Solder						
			032F7113	1/2 SAE Flare						
EVR 6	5.83	15/64	**032F7115**	3/8 ODF Solder	E6S130 B6S1 B6P1		200RB 3T3		RB3E3	
			032F7116	3/8 ODF Solder w/ man. Stem	ME6S130 MB6S1		200RB 3T3-M		RB3ME3 R20E83M	
			032F1160	3/8 SAE Flare	B6F1		200RB 4F3		RB3F3	
			032F1185	3/8 SAE Flare w/ man. Stem	MB6F1	4.9	200RB 4F3-M		R20F83M	5.7
			032F1162	1/2 ODF Solder	E6S140 B6S1		200RB 4T4	5.6	RB3E4	
			032F1159	1/2 SAE Flare						
			032F7117	5/8 ODF Solder			200RB 4T5			
EVR 8	8.01	9/32	**032F7120**	3/8 ODF Solder	E9S230 B9F2 B9P2		200RB 5T3			
			032F7121	1/2 ODF Solder	E9S240 B9S2		200RB 5T4			
			032F7123	1/2 SAE Flare	B10F2		200TB 5F4			
			032F7122	5/8 ODF Solder			200RB 5T5			
EVR 10	13.8	3/8	**032F7125**	3/8 ODF Solder			200RB 6T3			
			032F1166	1/2 ODF Solder	E10S240		200RB 6T4		RB6E4	
			032F1188	1/2 ODF Solder w/ man. Stem	ME10S240		200RB 6T4-M		RB6ME4 R30E124M	
			032F1165	1/2 SAE Flare	B10F2	11.1	200RB 6F4	10	RB6F4	9.5
			032F1187	1/2 SAE Flare w/ man. Stem			200RB 6F4-M		RB6MF4	
			032F1168	5/8 ODF Solder	E10S250 B10S2		200RB 6T5		RB6E5	
			032F1167	5/8 SAE Flare			200RB 6F5			
EVR 15	18.9	9/16	**032F1171**	5/8 ODF Solder	E14S250 B14S2		240RA 8T5		RB9E5	
			032F1172	5/8 ODF Solder w/ man. Stem	ME14S250 MB14S2	15.8	240RA 8T5-M	15.6	RB9ME5	15.0
			032F7130	7/8 ODF Solder			240RA 8T7			

continued next page

Normally Closed (Continued)

Danfoss					Sporlan		ALCO		Parker	
Solenoid Valve Model	Capacity Tons R-22 (Liquid)	Danfoss Port Size	**Danfoss Code Number**	Connection Size	Solenoid Valve Model	Capacity Tons R-22 (Liquid)	Solenoid Valve Model	Capacity Tons R-22 (Liquid)	Solenoid Valve Model	Capacity Tons R-22 (Liquid)
EVR 18	24.6	19/32	**032F7135**	7/8 ODF Solder	E19S270 B19S2				RB15E7 R40E187	
			32F1004	7/8 ODF Solder w/ man. Stem					RB15ME7 R40E187M	
			032F7136	1 1/8 ODF Solder					RB15E9 R40E189	
EVR 20	36.4	7/8	**032F1176**	7/8 ODF Solder	B19S2 B25S2		240RA 9T7 240RA 12T7	30.5 34.9	RB21E7 R40E287	
			032F1177	7/8 ODF Solder w/ man. Stem	MB25S2 ME25S270		240RA 9T7-M 240RA 12T7-M	30.5 34.9	RB21ME7 R40E2811 R40E287M	36.0
			032F1178	1 1/8 ODF Solder	B25P2		2400RA 9T9 240RA 12T9	30.5 34.9	RB21E9 R40E289	
			032F2272	1 1/8 ODE Solder w/ man. Stem					RB21ME9 R40E289M	
EVR 22	43.7	9/16	**032F7145**	1 1/8 ODF Solder	E25S290 B25S2					
			032F7146	1 3/8 ODF Solder						
EVR 25	72.8	1	**032F1189**	1 1/8 ODF Solder	E34S290 B33S2		240RA 16T9		RB41E9 R50E329	
			032F1190	1 1/8 ODF Solder w/ man. Stem	ME34S290 MB33S2		240RA 16T9-M		RB41ME9 R50E329M	
			032F1193	1 3/8 ODF Solder	E34S2110 B33S2		240RA 16T11		RB41E11 R50E3211	
			032F1194	1 3/8 ODF Solder w/ man. Stem	ME34S2110 MB33S2		240RA 16T11-M		RB41ME11 R50E3211M	
EVR 32	116.5	7/8	**042H1176**	1 3/8 ODF Solder			240RA 20T11			
			042H1177	1 3/8 ODF Solder w/ man. Stem			240RA 20T11-M			
			042H1178	1 5/8 ODF Solder	E42S2130		240RA 20T13			
			042H1179	1 5/8 ODF Solder w/ man. Stem	ME42S2130 MA42S3		240RA 20T13-M			
			042H1180	2 1/8 ODF Solder	E42S2170		240RA 20T17			
			042H1181	2 1/8 ODF Solder w/ man. Stem	ME42S2170 MA42S3		240RA 20T17-M			
EVR 40	182.0	1	**042H1185**	1 5/8 ODF Solder						
			042H1186	1 5/8 ODF Solder w/ man. Stem						
			042H1187	2 1/8 ODF Solder						
			042H1188	2 1/8 ODF Solder w/ man. Stem						

© Danfoss Inc. 01-07 (USCO)

Normally Open										
Danfoss					Sporlan		ALCO		Parker	
Solenoid Valve Model	Capacity Tons R-22 (Liquid)	Danfoss Port Size	**Code no.**	Connection Size	Solenoid Valve Model	Capacity Tons R-22 (Liquid)	Solenoid Valve Model	Capacity Tons R-22 (Liquid)	Solenoid Valve Model	Capacity Tons R-22 (Liquid)
EVR 6	5.80	1/4	**032F1164**	3/8 ODF Solder					ORB3E3 R25E83	
			032F1163	3/8 SAE Flare					ORB3F3 R25F83	
EVR 10	13.8	3/8	**032F1169**	1/2 ODF Solder	OR10S240	11.1			ORB6E4 R35E124	9.5
EVR 15	18.9	9/16	**032F1174**	5/8 ODF Solder	OE14S250 OB14S2	15.8	540RA8T5	15.6	ORB9E5 R35E155	15

Note: All capacities are based on liquid R-22 with a Δp of 3 psi.

Valve Type	Danfoss	Sporlan	Alco	Parker
Direct Operated	EVR 2 - EVR 3	E3 - E5	100RB	RB1
Servo Diaphragm Operated	EVR 6 - EVR 22		240RB	RB3 - RB41
Servo Disc Operated		E6 - E19		
Servo Piston Operated	EVR 25 - EVR 40	E24 - E42	200RB	

Standard Liquid Line Filter Driers					
Cubic Inches	Danfoss	Sporlan	Alco	Alco	Parker
	80% Sieve / 20% activate AL (DCL)	(C)	Compacted Bead (EK)	Solid Core (ADK)	
3	DCL 032 / 032s	C-032 / 032s	EK-032 / 032s	ADK-032 / 032s	032 / 032s
		C-032F / 032FM	EK-032MF / 032FM		032 MF
	DCL 32.5s				
	DCL 033 / 033s	C-033 / 033s	EK-033 / 033s	ADK-033 / 033s	
5	DCL 052 / 052s	C-052 / 052s	EK-052 / 052s	ADK-052 / 052s	052 / 052s
	DCL 052.5s	C-0525s			0525s
		C-052F / 052FM	EK-052MF / 052FM		
	DCL 053 / 053s	C-053 / 053s	EK-053 / 053s	ADK-053 / 053s	053 / 053s
8	DCL 082 / 082s	C-082 / 082s	EK-082 / 082s	ADK-082 / 082s	082 / 082s
			EK-082MF / 082FM		
	DCL 082.5s	C-0825s	EK-0825s		0825s
	DCL 083 / 083s	C-083 / 083s	EK-083 / EK-083s	ADK-083 / 083s	083 / 083s
	DCL 084 / 084s	C-084 / 084s	EK-084 / 084s	ADK-084 / 084s	084 / 084s
16	DCL 162 / 162s	C-162 / 162s	EK-162 / 162s	ADK-162 / 162s	162 / 162s
			EK-162MF / 162FM		
	DCL 162.5s	C-1625s	EK-1625s		1625s
	DCL 163 / 163s	C-163 / 163s	EK-163 / 163s	ADK-163 / 163s	163 / 163s
	DCL 164 / 164s	C-164 / 164s	EK-164 / 164s	ADK-164 / 164s	164 / 164s
	DCL 165 / 165s	C-165 / 165s	EK-165 / 165s	ADK-165 / 165s	165 / 165s
	DCL 166 / 166s				166
	DCL 167s	C-167s	EK-167s	ADK-167s	
30	DCL 303 / 303s	C-303 / 303s	EK-303 / 303s	ADK-303 / 303s	303 / 303s
	DCL 304 / 304s	C-304 / 304s	EK-304 / 304s	ADK-304 / 304s	304 / 304s
	DCL 305 / 305s	C-305 / 305s	EDK-305 / 305s	ADK-305 / 305s	305 / 305s
	DCL 306 / 306s	C-306s	EK-306s	ADK-306s	306
	DCL 307s	C-307s	EK-307s	ADK-307s	307s
	DCL 309s	C-309s	EK-309s	ADK-309s	
41	DCL 413	C-413	EK-413	ADK-413	413
	DCL 414 / 414s	C-414 / 414s	EK-414 / 414s	ADK-414 / 414s	414 / 414s
	DCL 415 / 415s	C-415 / 415s	EK-415 / 415s	ADK-415 / 415s	415 / 415s
	DCL 417s	C-417s	EK-417s	ADK-417s	417s
	DCL 419s	C-419s	EK-419s	ADK-419s	
60	DCL 604s				
	DCL 607s	C-607s			
	DCL 609s	C-609s			
75					756s
	DCL 757s	757s	EK-757s	ADK-757s	757s
	DCL 759s	759s	EK-759s	ADK-759s	759s

© Danfoss Inc. 01-07 (USCO)

High Capacity Liquid Line Filter Driers			
Cubic Inches	Danfoss	Sporlan	Alco
	100% Sieve (DML)	(CW)	(UK)
3	DML 032 / 032s	CW-032 / 032s	UK-032 / 032s
	DML 32.5s		
	DML 033 / 033s	CW-033 / 033s	UK-033 / 033s
	DML 34s		
5	DML 052 / 052s	CW-052 / 052s	UK-052 / 052s
	DML 052.5s		UK-0525s
	DML 053 / 053s	CW-053 / 053s	UK-053 / 053s
	DML 54s		
	DML 55s		UK-054 / 054s
8	DML 082 / 082s	CW-082 / 082s	UK-082 / 082s
	DML 082.5s	CW-0825s	UK-0825s
	DML 083 / 083s	CW-083 / 083S	UK-083 / 083s
	DML 084 / 084s	CW-084 / 084s	UK-084 / 084s
	DML 085 / 85s		UK-085 / 085s
16	DML 162 / 162s	CW-162 / 162s	UK-162 / 162s
	DML 162.5s		
	DML 163 / 163s	CW-163 / 163s	UK-163 / 163s
	DML 164 / 164s	CW-164 / 164s	UK-164 / 164s
	DML 165 / 165s	CW-165 / 165s	UK-165 / 165s
	DML 166 / 166s		
	DML 167s		UK-166s
30	DML 303 / 303s	CW-303	UK-303 / 303s
	DML 304 / 304s	CW-304 / 304s	UK-304 / 304s
	DML 305 / 305s	CW-305 / 305s	UK-305 / 305s
	DML 306 / 306s		
	DML 307s	CW-307s	UK-307s
	DML 309s		
41	DML 413		
	DML 414 / 414s	CW-414 / 414s	UK-414 / 414s
	DML 415 / 415s	CW-415 / 415s	UK-415 / 415s
	DML 417s		UK-417s
	DML 419s	CW-419s	UK-419s
60	DML 604s		
	DML 605		
	DML 606s		
	DML 607s	CW-607s	
	DML 609s	CW-609s	
75	DML 757s		
	DML 759s		

Bi flow Filter Driers				
Cubic Inches	Danfoss	Sporlan	Alco	Parker
	100% Molecular Sieves	(HPC)		(BF)
8	DMB 082 / 082s			BF-082s
	DMB 083 / 083s	HPC-103 / 103s		BF-083 / 083s
	DMB 084 / 084s	HPC-104 / 104s		BF-084 / 084s
16	DMB 162			BF-162s
	DMB 163 / 163s			BF-163 / 163s
	DMB 164 / 164s			BF-164 / 164s
	DMB 165 / 165s			BF165s
30	DMB 303			
	DMB 304 / 304s			
	DMB 305 / 305s			
	DMB 307s			

Cubic Inches	Danfoss	Sporlan	Alco	Parker
	80% Sieve / 20% activate AL (DCB)		(BFK)	
8	DCB 082 / 082s		BFK-052 / 052s	
	DCB 083 / 083s		BFK-053 / 053s	
			BFK-083 / 083s	
	DCB 084 / 084s		BFK-084 / 084s	
			BFK-085 / 085s	
16	DCB 162			
	DCB 163 / 163s		BFK-163 / 163s	
	DCB 164 / 164s		BFK-164 / 164s	
	DCB 165 / 165s		BFK-165 / 165s	
30	DCB 303		BFK-303 /303s	
	DCB 304 / 304s		BFK-304 / 304s	
	DCB 305 / 305s		BFK-305 / 305s	
	98145.451		98145.451	
			98145.451	
			BFK-309s	

© Danfoss Inc. 01-07 (USCO)

Replaceable Core Filter Drier Cross Reference					
Cubic Inches	Danfoss		Sporlan	Alco	Parker
	Shell (DCR)	**Code Number**	(C)	(EK)	
48	DCR 0485s	**023U2250**	C-485-G	STAS-485T	P485
	DCR 0487s	**023U2251**	C-487-G	STAS-487T	P487
	DCR 0489s	**023U2253**	C-489-G	STAS-489T	P489
	DCR 04811s	**023U2254**	C-4811-G	STAS-4811T	P4811
	DCR 04813s	**023U2255**	C-4813-G	STAS-4813S-V	P4813
	DCR 04817s	**023U2257**		STAS-4817S-V	P4817
	DCR 04821s	**023U2276**		STAS-4821S-V	P4821
96	DCR 0967s	**023U2258**	C-967-G	STAS-967T	P967
	DCR 0969s	**023U2260**	C-969-G	STAS-969T	P969
	DCR 09611S	**023U2261**	C-9611-G	STAS-9611T	P9611
	DCR 09613S	**023U2262**	C-9613-G	STAS-9613T	P9613
	DCR 09617S	**023U2264**		STAS-9617S-V	P9617
144	DCR 1449S	**023U2266**	C-1449-G	STAS-1449T	P1449
	DCR 14411S	**023U2267**	C-14411-G	STAS-14411T	P14411
	DCR 14413S	**023U2268**	C-14413-G	STAS-14413T	P14413
	DCR 14417S	**023U2270**		STAS-14417T	P14417
192	DCR 19211S	**023U2271**	C-19211-G	STAS-19211T	P19211
	DCR 19213S	**023U2272**	C-19213-G	STAS-19213T	P19213
	DCR 19217S	**023U2274**	C-19217-G	STAS-19217T	P19217
300	None		C-30013-G	ADKS-30013T	
			C-30017-G	ADKS-30017T	
400	None		C-40017-G	ADKS-40017T	
			C-40021-G	ADKS-40021T	
			C-40025-G		
			C-40029-G		
			C-40033-G		

Danfoss			Sporlan	Alco	Parker
Core Model	**Code Number**	Core Description	Core Model	Core Model	Core Model
48-DN	**023U4081**	80% MS / 20% AA	RCW-48	UK-48	PCX-48
48-DU	**023U1092**	100% Molec. Sieve		HX-48	Z-48
48-DA	**023U5081**	Burn out	RC-4864-HH	W-48	PCK-48HH
48-F	**023U1621**	Dirt Filter	RPE-48-BD	F-48	PFE-48-BF

Sight Glasses							
Danfoss				Sporlan	Alco		Parker
Model	**Code no.**	Connection Type	Connection Size (inches)	Model	Model		Model
SGN 6	**014-0132**		$^1/_4$ x $^1/_4$	SA-12	ALM-1MM2	AMI-1MM2	PSG-2
SGN 10	**014-0133**	Flare	$^3/_8$ x$^3/_8$	SA-13	ALM-1MM3	AMI-1MM3	PSG-3
SGN 12	**014-0134**	ext. x ext.	$^1/_2$ x $^1/_2$	SA-14	ALM-1MM4	AMI-1MM4	PSG-4
SGN 16	**014-0135**		$^5/_8$ x $^5/_8$	SA-15	ALM-1MM5	AMI-1MM5	PSG-5
SGN 6	**014-0137**		$^1/_4$ x $^1/_4$	SA-12FM	ALM-1FM2	AMI-1FM2	PSG-2MF
SGN 10	**014-0138/**	Flare	$^3/_8$ x $^3/_8$	SA-13FM	ALM-1FM3	AMI-1FM3	PSG-3MF
SGN 12	**014-0139**	int. x ext.	$^1/_2$ x $^1/_2$	SA-14FM	ALM-1FM4	AMI-1FM4	PSG-4MF
SGN 16	**014-0140**		$^5/_8$ x $^5/_8$				PSG-5MF
SGN 6s	**014-0142**		$^1/_4$ x $^1/_4$	SA-12S	ALM 1TT2		PSG-2S
SGN 10s	**014-0143**	ODF x ODF	$^3/_8$ x $^3/_8$	SA-13S	ALM 1TT3		PSG-3S
SGN 12s	**014-0144**	solder	$^1/_2$ x $^1/_2$	SA-14S	ALM 1TT4		PSG-4S
SGN 16s	**014-0145**		$^5/_8$ x $^5/_8$	SA-15S	ALM 1TT5		PSG-5S
SGN 22s	**014-0147**		$^7/_8$ x $^7/_8$	SA-17S	ALM 1TT7		PSG-7S
SGN 6s	**014-0151**		$^1/_4$ x $^1/_4$				
SGN 10s	**014-0152**	ODF x ODM	$^3/_8$ x $^3/_8$				
SGN 12s	**014-0153**	solder	$^1/_2$ x $^1/_2$				
SGN 16s	**014-0154**		$^5/_8$ x$^5/_8$				
SGN 22s	**014-0156**		$^7/_8$ x $^7/_8$				
SGRN 1/2	**014-0006**	NPT	$^1/_2$				

Danfoss offers two different types of sight glasses. Type "N" provides optimal moisture indication for all HCFC and HFC refrigerants. Type "I" provides optimal moisture indication for all CFC refrigerants.

© Danfoss Inc. 01-07 (USCO)

Pressure Regulators								
Application	Danfoss				Sporlan		Alco	
	Model	Nominal Capacity	**Code No.**	Connection Size (inches)	Model	Nominal Capacity	Model	Nominal Capacity
Evaporator	KVP 12	1.3	**034L0021**	1/2" Flare	ORIT 6	1.27	IPR-6	0.8
	KVP 12	1.3	**034L0023**	1/2" ODF	ORIT-6	1.27	IPR-6	0.8
	KVP 15	1.3	**034L0022**	5/8" Flare	ORIT 6	1.27	IPR-6	0.8
	KVP 15	1.3	**034L0029**	5/8" ODF	ORIT 6	1.27	IPR-6	0.8
	KVP 22	1.3	**034L0025**	7/8" ODF	ORIT 6	1.27	IPR-6	0.8
	KVP 28	2.8	**034L0026**	1 1/8" ODF	ORIT 10	3.13	IPR-10	2.0
	KVP 35	2.8	**034L0032**	1 1 3/8" ODF	ORIT 10	3.13	IPR-10	2.0
	PKV 12	5.2	**034N1051**	1 1/8" ODF	ORIT 12	4.57	EPRB 12	4.47
	PKVS 12	5.2	**034N1060**	1 1/8" ODF	SORIT 12	4.57	EPRBS 12	4.47
	PKV 15	8.3	**034N1052**	1 1 3/8" ODF	ORIT 15	7.54	EPRB 16	7.88
	PKVS 15	8.3	**034N1061**	1 1 3/8" ODF	SORIT 15	7.54	EPRBS 16	7.88
	PKV 20	13.5	**034N1053**	1 5/8" ODF	ORIT 20	16.5	EPRB 20	14.7
	PKVS 20	13.5	**034N1062**	1 5/8" ODF	SORIT 20	16.5	EPRBS 20	14.7
Condenser	KVR 12	7	**034L0091**	1/2" Flare				
	KVR 12	7	**034L0093**	1/2" ODF				
	KVR 15	7	**034L0092**	5/8" Flare				
	KVR 15	7	**034L0097**	5/8" ODF	ORI-6	12		
	KVR 22	7	**034L0094**	7/8" ODF	ORI-6	12		
	KVR 28	17.9	**034L0095**	1 1 1/8" ODF	ORI-10	24		
	KVR 35	17.9	**034L0100**	1 1 3/8" ODF	ORI-10	24		
	NRD		**020-1132**	1/2" ODF	ORD-4			
				1 3/8" ODF	LAC-4-180	3.92	HP5T-170	3.2
				5/8" / 7/8" ODF	OROA5 100	14.5	HP8T-95	8.5
	None			5/8" / 7/8" ODF	OROA5 180	14.5	HP8T-170	8.5
				7/8" / 1-1/8" / 1-1 3/8"	None		HP14T-105	20.8
				7/8" / 1-1/8" / 1-1 3/8"	None		HP14T-160	20.8

continued next page

Pressure Regulators (Continued)								
Pressure Regulator Application	Danfoss				Sporlan		Alco	
	Model	Nominal Capacity	**Code No.**	Connection Size	Model	Nominal Capacity	Model	Nominal Capacity
Capacity / Hot Gas Bypass	KVC 12	2.1	**034L0141**	1/2" Flare				
	KVC 12	2.1	**034L0143**	1/2" ODF			CPHE 2	1.2
							CPHE-3	2.3
	KVC 15	4.2	**034L0142**	5/8" Flare	None			
	KVC 15	4.2	**034L0147**	5/8" ODF				
	KVC 22	5.4	**034L0144**	7/8" ODF			CPHE 4	5.5
							CPHE 5	6.7
	CPCE 12	6.2	**034N0081**	1/2" Flare	ADRSE 2	3.7	DGRE-6	6
	CPCE 12	6.2	**034N0082**	1/2" ODF	ADRSE 2	3.7	DGRE-6	6
	CPCE 15	9.2	**034N0083**	5/8" ODF	ADRPE 3	7.2	DGRE-12	15.4
	CPCE 22	12.2	**034N0084**	7/8" ODF	ADRHE 6	11.4	DGRE-12	15.4
Crankcase	KVL 12	1.2	**034L0041**	1/2" Flare	CRO-6	1.2	OPR 6	0.9
	KVL 12	1.2	**034L0043**	1/2" ODF	CRO-6	1.2	OPR 6	0.9
	KVL 15	1.2	**034L0042**	5/8" Flare	CRO-6	1.2	OPR 6	0.9
	KVL 15	1.2	**034L0049**	5/8" ODF	CRO-6	1.2	OPR 6	0.9
	KVL 22	1.2	**034L0045**	7/8" ODF	CRO-6	1.2	OPR 6	0.9
	KVL 28	4.1	**034L0046**	1 1/8" ODF	CRO-10	3.5	OPR 10	2.3
	KVL 35	4.1	**034L0052**	1 1 3/8" ODF	CRO-10	3.5	OPR 10	2.3
Receiver	KVD 12		**034L0171**	1/2" Flare				
	KVD 12		**034L0173**	1/2" ODF				
	KVD 15		**034L0172**	5/8" Flare				
	KVD 15		**034L0177**	5/8" ODF				
Electronic	KVQ 15	2.3	**034L0117**	5/8" ODF				
	KVQ 22	2.3	**034L0114**	7/8" ODF			ESR 12	5.8
	KVQ 28	5.4	**034L0115**	1 1/8" ODF				
	KVQ 35	5.4	**034L0120**	1 3/8" ODF			ESR 20	13.4

All capacities are based on R-22. Competitor capacities are approximate values and are sized with similar sizing characteristics comparable to Danfoss nominal capacity characteristics.

© Danfoss Inc. 01-07 (USCO)

Prressure Controls, type KPU

Type of Control	Danfoss					Penn/Johnson		Ranco			Alco		
	Model	Range (psig)	Diff. (psig)	**Code No.**	Connection Type	Model	Range (psig)	Model	Range (psig)	Diff. (psig)	Model	Range (psig)	Diff. (psig)
Low Pressure	KPU-1	6 in - 108	10 - 58	**060-5236***	1/4" Flare	P170-AB2	20 in - 100	010-1831	10 in - 100	10 - 40			
	KPU-1	6 in - 108	10 - 58	**060-5231**	1/4" Flare	P70AB-1	20 in - 100	010-1831	10 in - 100	10 - 40	FF115-S3 BAA	15 in - 100	7 - 70
											PS1-X3A		
						P170AB-2	20 in - 100	011-1799	10 in - 100	10 - 40			
						P270AB-2	20 in - 100	016-107	10 in - 100	10 - 40			
						P170AB-12	12 in - 80						
						P270AB-12	12 in - 80						
						P170CA-1	20 in - 100						
						P270CA-1	20 in - 100						
	KPU-1	6 in - 108	10 - 58	**060-5233**	w/ Cap. Tube	P70CA-1	20 in - 100	010-1483	10 in - 100	10 - 40	FF115-S3 BAK	15 in - 100	7 - 70
						P70AB-2	20 in - 100	010-1093			PS1-X3K		
						P70AA-2	0 - 150	011-3099	10 in - 100	10 - 40			
						P70AB-12	12 in - 80	016-527	10 in - 100	10 - 40			
						P70AA-176	20 in - 100	020-7004	10 in - 100	10 - 40			
								016-166	50 - 150	10 - 40			
	KPU-1	27 in - 100	fixed 10	**060-5232**	1/4" Flare	P70EA-10	20 in - 100	016-585	10 in to 100				
	KPU-1	27 in - 100	fixed 10	**060-5234**	w/ Cap. Tube			016-261	10 in to 100				
	KPU-2	6 in - 50	6 - 30	**060-5239**	1/4" Flare	P70AB-1	20 in - 100	010-1401	12 in - 50	5 - 35			
								016-120	12 in - 50	5 - 35			
	KPU-2	6 in - 50	6 - 30	**060-5240**	w/ Cap. Tube	P70AB-2	20 in - 100	010-1402	12 in - 50	5 - 35	FF115-S1 BAK	24 in - 42	3 - 30
						P70CA-1	20 in - 100	010-1842	12 in - 50	5 - 35	PS1-X1K		
								016-557	12 in - 50	5 - 35			
								020-7002	10 in - 100	10 - 40			
	KPU-2	6 in - 72.5	6 - 30	**060-5237***	1/4" Flare	P170AB-12	12 in - 80	010-1401	12 in - 50	5 - 35			
	KPU-2	6 in - 72.5	6 - 30	**060-5235***	w/ Cap. Tube	P70AB-12	12 in - 80	010-1402	12 in - 50	5 - 35			

* Indicates SPST
**Indicates a LP and HP Signal

Pressure Controls, type KPU (Continued)

Type of Control	Danfoss					Penn/Johnson		Ranco			Alco		
	Model	Range (psig)	Diff. (psig)	**Code No.**	Connection Type	Model	Range (psig)	Model	Range (psig)	Diff. (psig)	Model	Range (psig)	Diff. (psig)
High Pressure	KPU-5	100 - 465	25 - 85	**060-5241***	1/4" Flare	P170AA-118	100-400	O10-1807	100 - 250	20 - 100	FF115-S5 BAA	90 - 450	30 - 220
								010-1894			PS1-X5A		
	KPU-5	100 - 465	25 - 85	**060-5242***	w/ Cap. Tube	P70AA-118	100 - 400	O10-2000	100 - 250	20 - 100	FF115-S5 BAK	90 - 450	30 - 220
											PS1-X5K		
											FF115-S4 BAK	15 - 290	29 - 217
											PS1-X4K		
	KPU-6W	100 - 465	58 - 140	**060-5243**	1/4" Flare	P70CA-3	50 - 450	O10-1807	100 - 250	20 - 100			
						P170AA-118	100 - 400	O10-1894	100 - 400	35 - 150			
						P170CA-3	50 - 450	O16-570	100 - 400	35 - 150			
								O11-1713	150 - 450	35 - 150			
								O16-583	150 - 450	35 - 150			
	KPU-6W	100 - 465	58 - 140	**060-5245**	w/ Cap. Tube	P70CA-3	50 - 450	O10-2000	100 - 250	100 - 250			
						P70AA-118	100-400	O10-2054	100 - 400	35 - 150			
								O16-108	100 - 400	35 - 150			
						P270AA-118	100 - 400	O20-7006	100 - 400	35 - 150			
						P270CA-3	50 - 450	O11-1711	150 - 400	35 - 150			
	KPU-6B	116 - 465	fixed 58	**060-5244**	1/4" Flare	P170DA-1	50 - 450	O16-209	150 - 450		FF115-S5 BRA	90 - 450	fixed 60
						P170KA-1	50 - 450				PS1-Y5A		
	KPU-6B	116 - 465	fixed 58	**060-5246**	w/ Cap. Tube	P70DA-1	50 - 450	O16-211	150 - 450		FF115-S5 BRK	90 - 450	fixed 60
						P70KA-1	50 - 450	O16-142	100 - 400	fixed 17	PS1-Y5K		
						P270DA-1	50 - 450						
						P270KA-1	50 - 450						

* Indicates SPST
**Indicates a LP and HP Signal

 © Danfoss Inc. 01-07 (USCO)

Pressure Controls, type KPU (Continued)

Type of Control	Danfoss					Penn /Johnson		Ranco			Alco		
	Model	Range (psig)	Diff. (psig)	**Code No.**	Connection Type	Model	Range (psig)	Model	Range (psig)	Diff. (psig)	Model	Range (psig)	Diff. (psig)
Dual Pressure Controls	KPU-15	6 in - 108 100 - 465	10 - 58 fixed 58	**060-5247**	1/4" Flare	P170LB-1	20 in - 100	O12-1505	12 in - 50	5 - 35	FF215-S7 BAUA	15 in - 100	7 - 70
							100 - 425		100 - 250	fixed 50	PS2-Y7A	90 - 450	fixed 60
						P170LB-6	12 in - 80	O10-4139					
							100 - 425						
						P170LN-8		O12-1550	10 in - 100	10 - 40			
									150 - 450	fixed 70			
						P170LN-9							
	KPU-15	6 in - 108 100 - 465	10 - 58 fixed 58	**060-5248**	w/ Cap. Tube	P70LB-6	12 in - 80	O12-1506	12 in - 50	5 - 35	FF215-S7 BAUK	15 in - 100	7 - 70
							100 - 425		100 - 250	fixed 50	P2-Y7K	90 - 450	fixed 60
						P70LB-1	20 in - 100	O12-1554	12 in - 50	5 - 35			
							100 - 425		100 - 250	fixed 50			
								O12-1502	12 in - 50	5 - 35			
									150 - 450	fixed 70			
								O12-1549	10 in - 100	10 - 40			
									150 - 450	fixed 70			
						P270LB-1	20 in - 100						
							100 - 425						
						P270LB-6	12 in - 80						
							100 - 425						
						P270LN-8							
						P270LN-9							
	KPU-15	6 in - 108 100 - 465	10 - 58 fixed 58	**060-5249**	1/4" Flare	P170MA-1	20 in - 100				FF215-S7 BAUA	15 in - 100	7 - 70
							100 - 425				PS2-Y7A	90 - 450	fixed 60
						P170MA-18	12 in - 80						
							100 - 425						

* Indicates SPST
**Indicates a LP and HP Signal

Pressure Controls , type KPU (Continued)

Type of Control	Danfoss					Penn /Johnson		Ranco			Alco		
	Model	Range (psig)	Diff. (psig)	**Code Number**	Connection Type	Model	Range (psig)	Model	Range (psig)	Diff. (psig)	Model	Range (psig)	Diff. (psig)
Dual Pressure Controls	KPU-15	6 in - 108 100 - 465	10 - 58 fixed 58	**060-5250**	w/ Cap. Tube	P70MA-18	12 in - 80 100 - 425	O12-4834	10 in - 100 150 - 450	10 - 40 fixed 70	FF215-S7 BAUA PS2-Y7A	15 in - 100 90 - 450	7 - 70 fixed 60
						P70MA-1	20 in - 100 100 - 425						
						P270MA-1	20 in - 100 100 - 425						
						P270MA-18	12 in - 80 100 - 425						
	KPU-16W	6 in - 108 100 - 465	10 - 58 fixed 58	**060-5252**	w/ Cap. Tube	P70LB-6	12 in - 80 100 - 425	O12-1506	12 in - 50 100 - 250	5 - 35 fixed 50			
						P70LB-1	20 in - 100 100 - 425	O12-1554	12 in - 50 100 - 250	5 - 35 fixed 50			
								O12-1502	12 in - 50 150 - 450	5 - 35 fixed 70			
								O12-1549	10 in - 100 150 - 450	10 - 40 fixed 70			
	KPU-16W	“6 in - 108 100-465”	10-58 fixed58	**060-5251**	1/4” Flare	P170LB-6	12 in - 80 100 - 425	012-1505	12 in - 50 100 - 250	5 - 35 fixed 50			
						P170LB-1	20 in - 100 100 - 425	012-4139	5 to 35 150 to 450				
								012-1550	10 in - 100 150 - 450	10 - 40 fixed 70	FF215-S9 BAUK PS-Y9K	24 in - 42 90 - 450	3 - 30 fixed 60
	KPU-16B	6 in - 108 100 - 465	10 - 58 fixed 58	**060-5254****	w/ Cap. Tube	P70LB-6	12 in - 80 100 - 425	O12-1506	12 in - 50 100 - 250	5 - 35 fixed 50			
						P70LB-1	20 in - 100 100 - 425	O12-1554	12 in - 50 100 - 250	5 - 35 fixed 50			
								O12-1502	12 in - 50 150 - 450	5 - 35 fixed 70			
								O12-1549	10 in - 100 150 - 450	10 - 40 fixed 70			
						P70NA-1	20 in - 100 100 - 500	O12-1594	10 in - 100 150 - 450	10 - 40 fixed 70			
						P70SA-1	12 in - 80 100 - 500	O12-4840	10 in - 100 150 - 450	10 - 40 fixed 70			
	KPU-16B “10 - 58 060 5253**	“6 in - 108 1/4” Flare	10 - 58 fixed 58	**060-5253****	1/4” Flare	P70LB-6	12 in - 80 100 - 425	O12-1506	12 in - 50 100 - 250	5 - 35 fixed 50			
						PL170LB-1	20 in - 100 100 - 425	012-4139	5 to 35 100 - 250				
						PL170LB-1	12 IN - 80 100 - 425	012-1550	10 in - 100 150 to 450	10 - 40 fixed 70			
						P170MA-18	12 in - 80 100 - 425	012-1550	10 in - 100 150 - 450	10 - 40 fixed 70			
						P170NA-1	20 in - 100 100 - 500	012-4147	10 in - 100 150 to 450	10 - 40 fixed 70			
						P170SA-1	12 in - 80 100 - 500	012-4846	10 in - 100 150 to 450	10 - 40 fixed 70			

* Indicates SPST
**Indicates a LP and HP Signal

© Danfoss Inc. 01-07 (USCO)

Thermostat Cross Reference

	Danfoss							Penn/Johnson			Ranco			Alco		
Type of Charge	Model	Range (°F)	Diff. Low (°F)	Reset	Cap tube length (in)	Bulb Type	**Code Number**	Model	Range (°F)	Diff. (°F)	Model	Range (°F)	Diff. (°F)	Model	Range (°F)	Diff. (°F)
Vapor	KPU-61	-20 to 60	10 to 40	Auto.	80	Cap Tube	**060L5201**				016-588 016-111 010-1416 010-1010	-15 to 40 0 to 55 0 to 55 0 to 55	1.5 fixed 3 to 20 3 to 20 7 to 55			
	KPU-61	-20 to 60	10 to 40	Auto.	200	Cap Tube	**060L5202**									
	KPU-61	-20 to 60	8 to 40	Auto.	80	Remote Air Coil	**060L5203**									
	KPU-61	-20 to 60	fixed 11	Man.(3)	80	Remote Air Coil	**060L5204**	A19ACA-14	-30 to 110	Man.	010-1408 010-1409 016-104 010-1490	-15 to 40 0 to 55 0 to 55 0 to 55	3 to 20 3 to 20 3 to 20 2	TF115-S2 AA10 TS1-X2A 21/30	-20 to 60 -20 to 60	3 to 30 3 to 30
	KPU-61	-20 to 60	fixed 11	Man.(3)	200	Remote Air Coil	**060L5205**	A19ACA-15	-30 to 110	Man.						
	KPU-61	-20 to 60	8 to 40	Auto.(4)	80	Remote Air Coil	**060L5210**									
	KPU-62	-20 to 60	10 to 40	Auto.	0	Room Sensor	**060L5206**	A19BBC-2	-30 to 110	3 to 12	010-1418	0 to 55	3 to 20			
	KPU-63	-60 to 15	18 to 125	Auto.	80	Cap Tube	**060L5213**				010-1000 010-1433	-55 to 0 -35 to 15	3 to 20 3 to 20			
	KPU-63	-60 to 15	18 to 125	Auto.	80	Remote Air Coil	**060L5214**									
	KPU-68	25 to 95	8 to 45	Auto.	0	Room Sensor	**060L5215**	A19BAB-3 A19BAC-1 A19BBC-2	35 to 95 30 to 110 -30 to 110	fixed 3.5 fixed 3.5 fixed 3.5	010-1802 016-595	25 to 75 50 to 105	3 to 20 3 to 20	TF115-S3 AE00 TS1-X3E 64/68 TF115-S2 AE00 TS1-X2E 36/40	-15 to 95 -15 to 95 -20 to 60 -20 to 60	3 to 30 3 to 30 3 to 30 3 to 30
	KPU-69	25 to 95	8 to 45	Auto.	0	Remote Air Coil	**060L5217**				010-1410 010-1491	25 to 75 25 to 75	3 to 20 2			
Adsorption	KPU-62	-20 to 60	9 to 36	Auto.(4)	0	Room Sensor	**060L5207**									
	KPU-73	-15 to 60	6 to 18	Auto.	80	Remote Bulb	**060L5208**	A19ABC-24 A19ABA-40	-30 to 100 -30 to 110	3 to 12 3 to 12	010-1409 060-100 010-1408	0 to 55 -35 to 95 -15 to 40	3 to 20 3.5 to 50 3 to 20	TF115-S4 AF10 TS1-X4F 32/41	-20 to 95 -20 to 95	5 to 35 5 to 35
	KPU-73	-15 to 60	22 to 125	Auto.	80	Remote Bulb	**060L5209**									
	KPU-73	-15 to 60	fixed 6	Man.(3)	80	Remote Bulb	**060L5211**				016-264 016-263	0 to 55 0 to 55				
	KPU-73	-20 to 60	4 to 10	Auto.	80	Double Contact Remote Bulb	**060L5212**									
	KPU-71	25 to 70	5.5 to 18	Auto.	80	Remote Bulb	**060L5218**				010-1410 020-8005 010-1491 016-601	25 to 75 25 to 75 25 to 75 22.5 to 47.5	3 to 20 3 to 20 2 fixed 1.5 fixed			
	KPU-71	25 to 60	fixed 5	Man.(3)	80	Remote Bulb	**060L5216**	A70GA2C	35 to 80	3 to 30						
	KPU-74	0 to 80	10 to 35	Auto.	80	Remote Bulb	**060L5219**	A19AAC-4C	0 to 80	fixed 5	016-104 010-1473	0 to 55 0 to 55	3 to 20 7 to 55			
	KPU-74	0 to 80	fixed 9	Man.(3)	80	Remote Bulb	**060L5220**				016-263	0 to 55		TF115-S4 AF10 TS1-X4F 32/41	-20 to 95 -20 to 95	5 to 35 5 to 35
	KPU-75	32 to 95	6.3 to 30	Auto.	80	Remote Duct Coil	**060L5221**									
	KPU-75	32 to 95	6.3 to 30	Auto.	80	Remote Bulb	**060L5222**				020-7013	50 to 105	3 to 20			
	KPU-77	70 to 140	6.3 to 18	Auto.	80	Remote Bulb	**060L5223**	A19ABC-4C	50 to 130	3.5 to 14	020-7013	50 to 105	3 to 20			

Check Valves

Danfoss						Parker	Mueller	Superior	Henry	Watsco
Model	Body Type	Cv Value gal/min	Liquid Capacity	**Code no.**	Connection Size	Model	Model	Model	Model	Model
NRV 6(s)	Straightway	0.65	2.2	**020-1040**	1/4" Flare		A-15620	802B-4	119-1/4	MTS-4F
				020-1010	1/4" ODF		A-15632	802B-4ST	120-1/4	MTS-4S MTS-6S MS-4
NRV 10(s)		1.6	5.3	**020-1041**	3/8" Flare		A-15621	802B-6	119-3/8	MTS-6F
				020-1011	3/8" ODF	CV4-6FS-6FS	A-15633	802-6ST	120-3/8	MTS-6S MTS-8S MS-6
NRV 12(s)		2.3	7.6	**020-1042**	1/2" Flare		A-15622	802B-8	119-1/2	MTS-8F
				020-1012	1/2" ODF	CV5-8FS-8FS	A-15634	802B-8ST	120-1/2	MTS-8S MTS-10S MS-8
NRV 16(s)		4.2	13.9	**020-1043**	5/8" Flare		A-15623		119-5/8	MTS-10F
				020-1018	5/8" ODF	CV7-10FS-10FS	A-15635	803B-10ST	120-5/8	MTS-10S MS-10
NRV 19(s)		5.78	16.82	**020-1044**	3/4" Flare					
				020-1019	3/4" ODF					
NRV 22s	Angleway	9.9	32.8	**020-1020**	7/8" ODF		A-15735	185C-14S	215-7/8	
NRV 28s		22	73.5	**020-1021**	1 1/8" ODF		A-15736	186C-11S	215-1-1/8	
NRV 35s		34	113	**020-1026**	1 3/8" ODF		A-15737	187C-13S	215-1-3/8	

© Danfoss Inc. 01-07 (USCO)

Differential Pressure/Lube Oil Protection Controls											
Type of Control	Danfoss					ALCO**		PENN		RANCO	
	Model *	Diff. (psi)	Time relay delay time (s)	**Code no.**	Pressure Connection (in)	Part no.	Diff. (psi)	Part no.	Diff. (psi)	Part no.	Diff. (psi)
Differential Pressure / Lube Oil protection	MP 54	6.0	45	**60B2008**	1/4 flare			P145NCA-82C	6.5		
								P145NCB-82C	6.5		
		9.0	60	**60B2001**						3321-001	9.0
		9.0	90	**60B2002**						3321-001	9.0
		9.0	120	**60B2003**				P145NCA-12C	9.0	P30-5827	9.0
								P145NCB-12C	9.0	3321-001	9.0
		6.0	45	**60B2050**	36 cap tube			P45NCA-82C	6.5	3321-009	5.0
		6.0	60	**60B2059**						3321-009	5.0
		9.0	60	**60B2051**						3321-010	9.0
		9.0	120	**60B2053**				P45NCA-12C	9.0	P30-5826	9.0
										3321-010	9.0
		6.0	45	**60B2058**	88 cap tube						
	MP 55	4.3 to 64	60	**60B2012**	1/4 flare			P128AA-2C	8 to 70		
		4.3 to 64	90	**60B2006**		FD113-ZU	4 to 65	P28AN-1C	8 to 70		
								P128AA-1C	8 to 70		
		4.3 to 64	120	**60B2007**				P128AA-17C	8 to 70		
		4.3 to 64	45	**60B2054**	36 cap tube			P28AA-18C	8 to 70	P30-3601	8 to 60
								P28AA-2C	8 to 70	3321-014	15.0
										3321-015	30.0
		4.3 to 64	90	**60B2056**		FD113-ZUK	4 to 65	P28AA-1C	8 to 70	P30-3701	8 to 60
								P28DA-1C***	8 to 70	3321-014	15.0
										3321-015	30.0
		4.3 to 64	120	**60B2057**				P28AA-17C	8 to 70	P30-3801	8 to 60
								P28NA-5C	8 to 70	3321-014	15.0
										3321-015	30.0

* Danfoss models have fixed time relay delay time, and manual reset.
** Alco models have adjustable time from 20 to 150 seconds.
*** With runlight and alarm terminals.

Capacity Cross Reference between Tecumseh, Copeland® and Danfoss

Locate the Tecumseh condensing units below and find the corresponding Danfoss condensing units to the right of it →

Locate the Copeland condensing units below and find the corresponding Danfoss condensing units to the left of it ←

R12 Replacement High/Medium (25/90)					
Capacity	Tecumseh units OEM and Aftermarket	**Danfoss Aftermarket units**	**Danfoss Capacity**	Copeland units OEM and Aftermarket	Capacity
1110	AEA3414	**UCBC0017RW*******	**1121**	MBFS0017	1185
1235	AEA3417	**UCBC0020RW*******	**1171**	MBFS0020	1370
1725	AEA3425	**UCBC0025RW*******	**2161**	MBFHA026	2140
2180	AEA4430				
2730	AEA4440	**UCBC0033RW*******	**2221**	MBFS0033	2790
3325	AEA4448	**UCBC0045RW*******	**3476**		
4175	AJA4461	**HCBC0050RW*******	**4164**	MBFH0049	3710
4820	AJA7441			FBAM0050	4860
6380	AJA4492	**HCBC0055RW*******	**5949**	FBAHB075	5700
7200	AJA7465	**HCBC0075RW*******	**7386**	FBAHB100	5850
8500	AJA4512	**HCBC0100RW*******	**9102**		
9400	AHA7480				

R134a High/Medium (25/90)					
Capacity	Tecumseh units OEM and Aftermarket	**Danfoss Aftermarket units**	**Danfoss Capacity**	Copeland units OEM and Aftermarket	Capacity
930	AEA3414	**UCGC0017RW*******	**1,007**	M2FH0017	1150
1240	AEA3417	**UCGC0020RW*******	**1,860**	M2FH0020	1330
1620	AEA3425			M2FH0024	1810
1940	AEA4430	**UCGC0025RW*******	**2,095**	M2FH0026	2080
2560	AEA4440	**UCGC0033RW*******	**2,717**	M2FHA033	2710
3180	AEA4448				
4000	AKA4460	**UCGC0050RW*******	**4,264**	M2FH0049	3600
4250	AKA7437				
4900	AKA4476	**HCGC0055RW*******	**5,009**	M2FH0056	4630
5700	AJA4492	**HCGC0075RW*******	**7,325**	FTAHA074	5450
				FTAHA075	5510
6600	AJA7465			FRAHB074	5780
				FTAMA074	6370
				FTAMA075	7010
8200	AJA4512	**HCGC0100RW*******	**9,785**	FTAHA100	6790
				FTAHA101	7770

** Please see Condensing Unit Nomenclature for version definitions and rating conditions.
Copeland is a registered trademark of Emerson Climate Technologies.

© Danfoss Inc. 01-07 (USCO)

Capacity Cross Reference between Tecumseh, Copeland® and Danfoss (continued)

R404A High/Medium (25/90)					
Capacity	Tecumseh units OEM and Aftermarket	**Danfoss Aftermarket units**	**Danfoss Capacity**	Copeland units OEM and Aftermarket	Capacity
1610	AEA9415	**UCHC0020RW*******	**1552**	M4FH0022	1720
2380	AEA9422	**UCHC0025RW*******	**2,634**	M4FH0025	2430
3160	AKA9429	**UCHC0033RW*******	**3,188**	M4FHA036	3370
4500	AKA9440	**UCHC0050RW*******	**4,279**	M4FH0050	4380
		HCHC0060RW*****	**5,427**	FJAFA056	5990
6633	AKA9460	**HCHC0075RW*******	**7,693**	FJEMA075	7020
				FJAFB078	6740
				FJAFA078	6930
				FJAFA074	6940
				FJAFA075	7100
				FJAFA076	7570
				FJAFA079	7740
8620	AJA7480	**HCHC0100RW*******	**9,042**	FJAMA100	7620
				FJAMA101	8270
				FJAMA106	8530
				FJAFA100	9640
13142	AWA7512	**HCZC0150UW********	**11,535**	FJAMA125	9880
				FJAMA126	11100
				FJAMA150	13500
15654	AWA7515	**HGZC0200UW********	**16,344**	VJAF017H	16000
				FJAMA200	17300
		HCZC0225UW******	**19,974**	VJAF020H	19300
				FJAMA225	19200
		HCZC0275UW******	**23,728**	VJAF025H	23800
24781	AVA7523	**HCZC0300UW********	**27,206**	FJAMA300	25400
				VJAF030H	26000
				FJAMA325	28900
		HGZC0400UW******	**36,521**	VJAF035Z*	36850
				VJAF035H	38800
		HGZC0500UW******	**45,339**	FJAMB400	41380
				VJAF040Z*	43400
				VJAF040H	44000
				FJAMB500	44200
				VJAF050Z*	50150
		HGZC0700UW******	**56,330**	FJAH070Z*	64520
		HGZC0900UW******	**79,528**	FNAR080Z*	66400
				FNAR091Z*	76000
		HGZC1000UW********	**87,743**	FJAH100Z*	87580
		HGZC1200UW********	**99,106**	CJDM1000**	105870
		HGZC1350UW********	**104,476**	FJAH120Z*	100900
				FJAM130Z*	111930

** Please see Condensing Unit Nomenclature for version definitions and rating conditions.
Copeland is a registered trademark of Emerson Climate Technologies.

Capacity Cross Reference between Tecumseh, Copeland® and Danfoss (continued)

R404A Low Temp (-10/90)					
Capacity	Tecumseh units OEM and Aftermarket	**Danfoss Aftermarket units**	**Danfoss Capacity**	Copeland units OEM and Aftermarket	Capacity
		UCHC0020RW*****	**764**		
1000	AEA2410	**UCHC0025RW*******	**1,303**		
1340	AEA2413	**UCHC0033RW*******	**1,577**	M4FL0033	1440
2180	AKA2422	**UCHC0050RW*******	**1,959**	M4FL0040	2120
2890	AJA2429	**LCHC0060RW*******	**2,941**	M4FL0051	2550
		LCHC0075RW*****	**3,460**	M4FL0067	3520
				FJAFA075	4180
4838	AWA2448	**LCHC0100RW*******	**5,329**	FJALA100	4580
				FJALA101	4850
				FJALA103	4950
				FJALA102	5090
6450	AWA2464	**LCHC0150UW********	**6,768**		
7871	AWA2479	**LCHC0200UW********	**8,770**	FJALB200	9010
8790	AWA2490			FJALA225	9440
9999	AVA2510			FJALA0250	8110
11851	AVA2512	**LCHC0300UW********	**14,844**	VJAL025Z*	13600
14475	AVA2515			FJALB301	14430
				VJAL035Z*	15450
		LGHC0400UW******	**19,984**	VJAL040Z*	18950
				VJAL050Z*	22500
		LGHC0600UW******	**30,306**	CJDL0600**	33900
		LGHC0750UW******	**38,282**	CPDK0600**	35600

** Please see Condensing Unit Nomenclature for version definitions and rating conditions.
Copeland is a registered trademark of Emerson Climate Technologies.

© Danfoss Inc. 01-07 (USCO)

Capacity Cross Reference between Tecumseh, Copeland® and Danfoss (continued)

R22 High/Medium (25/90)					
Capacity	Tecumseh units OEM and Aftermarket	**Danfoss Aftermarket units**	**Danfoss Capacity**	Copeland units OEM and Aftermarket	Capacity
1800	AEA9417	**HCMC0025RW*******	**3,009**	MMFH0022	1680
1950	AEA0417			MCFH0027	2600
2580	AEA9423				
3710	AKA9433	**HCMC0033RW*******	**3,509**	MCDH0036**	3140
5150	AKA9446	**HCMC0050RW*******	**5,044**	MCFH0049	4250
				MCFH0056	4950
		HCMC0060RW*****	**5,516**		
6900	AKA9461	**HCMC0075RW*******	**6,600**	F3AHA078	6450
7800	AJA9470	**HCMC0100RW*******	**7,210**	F3AHA100	7480
9500	AJA9486	**HCMC0150UW********	**10,707**	V3AH010H	8400
				V3AH012H	9400
				F3AMA105	9600
				F3ADB151	12100
13189	AWG4520	**HGMC0200UW********	**15,575**	V3AH015H	12700
				V3AH020H	15600
16399	AWG4524			F3ADB201	16200
20789	AWG4530	**HCMC0225UW********	**20,243**	F3ADB225	18100
				V3AH022H	18900
		HCMC0275UW******	**24,270**	F3ADB301	24550
				V3AH030H	25200
27485	AVA4540	**HCMC0300UW********	**27,827**	F3ADB325	26790
				V3AH032H	28200
38250	AGA4553	**HGMC0400UW********	**34,069**	F3ADB401	37600
				V3AH040H	35500
46000	AGA4563	**HGMC0500UW********	**43,503**	V3AH050H	41500
				F3ADA501	42700
49500	AGA4572	**HGMC0700UW********	**54,327**		
		HGMC0900UW******	**70,789**		
		HGMC1000UW******	**90,002**		
		HGMC1200UW******	**100,199**		

** Please see Condensing Unit Nomenclature for version definitions and rating conditions.
Copeland is a registered trademark of Emerson Climate Technologies.

Danfoss Part No. (OEM) Specific	Standard Danfoss Code No.
014-007500	014-0065
014-009300	014-0006
014-009300	014-0006
014-009300	014-0006
014-017700	014-0131
014-017800	014-0002
014-018000	014-0006
014-025600	014-0068
014-108000	014-0123
018F679600	018F6856
018F679600	018F6857
018Z829700	018F6707
020-107700	020-1021
020-108000	020-1040
020-108100	020-1041
020-115700	020-1040
020-115800	020-1041
020-118600	020-1010
023U407000	023Z5009
023U407000	023Z5009
023U548200	032U5380
023Z007700	023Z5008
023Z014400	023Z5032
023Z014800	023Z5019
023Z014900	023Z5026
023Z017500	023Z0108
023Z023100	023Z0013
023Z023200	023Z0014
023Z023500	023Z0102
023Z025800	023Z0014
023Z025900	023Z0034
023Z026200	023Z5033
023Z026300	023Z0106
023Z323100	023Z0013
023Z324900	023Z0032
023Z325000	023Z0034
023Z510200	023Z5007
023Z510400	023Z5008
023Z510600	023Z5009
023Z510800	023Z5009
023Z511300	023Z5009
023Z515200	023Z5048
023Z802200	023Z5022
023Z812600	023Z5023
023Z813700	023Z5033
032F207901	032F1171
032F229800	032F1166
032F207901	032F1171
032F229800	032F1166

Danfoss Part No. (OEM) Specific	Standard Danfoss Code No.
032F229800	032F1166
032F229900	032F1166
032F229900	032F1166
032F230321	032F7100
032F319300	032F7115
032F319300	032F7115
032F319300	032F7115
032F628701	032F4011
034L005600	034L0046
034L006000	034L0045
034L006000	034L0045
034L012300	034L0115
034L012300	034L0115
034L014000	034L0046
034L014000	034L0046
034L018700	034L0045
034L025100	034L0106
034L025100	034L0106
060-116666	060-2064
060-206566	060-2064
060-211466	060-2058
060-505866	060-2001
060-535266	060-2051
060-535366	060-2058
060B206666	060-2050
060B206766	060-2050
060B206966	060-2050
060B207066	060-2050
060B207066	060-2050
067L210200	067L1045
068H853800	068H6204
068H861000	068H7130
068H861100	068H7132
068H861200	068H7134
068H861300	068H7140
068H861400	068H7146
068H861500	068H7148
068H861600	068H7130
068H861700	068H7132
068H861800	068H7134
068U173100	068U2286
068U173100	068U2286
068Z3212VT	068-3462
068Z339400	068Z3385
068Z344400	068Z3403
068Z349200	068Z3348
068Z650300	068Z3385
084B501100	084B5012

Refrigeration Components Diagram

°F	R12	R22	R134a	R404A	R407C		R408A	R409A		R410A	R502
	Vapor	Vapor	Vapor	Vapor	Liquid	Vapor	Vapor	Liquid	Vapor	Vapor	Vapor
-50	15.4"	6.2"	18.7"	0.6	2.9"	11.4"	1.6"	12.4"	17.2"	3.5	0.2"
-45	13.3"	2.7"	16.9"	2.7	0.4	8.5"	1.1	9.7"	15.2"	8.5	1.9
-40	11"	0.5	14.8"	5	2.5	5.2"	3.3	6.8"	13.1"	12	4.1
-35	8.4"	2.6	12.5"	7.6	4.8	1.5"	5.6	3.5"	10.7"	15	6.5
-30	5.5"	4.9	9.8"	10	7.3	1.3	8.2	0	8.1"	19	9.2
-25	2.3"	7.4	6.9"	13	10	3.6	11	2	5.1"	23	12
-20	0.6	10	3.7"	17	13	6.1	14	4.1	1.9"	27	15
-15	2.4	13	0.1"	21	17	8.8	18	6.5	0.8	32	19
-10	4.5	17	1.9	25	20	12	21	9	2.8	37	23
- 5	6.7	20	4.1	29	24	15	25	12	4.9	43	27
0	9.1	24	6.5	34	28	19	30	15	7.2	49	31
+ 5	12	28	9.1	39	33	23	34	18	9.7	55	36
10	15	33	12	44	38	27	39	22	13	62	41
15	18	38	15	50	44	32	45	26	15	70	47
20	21	43	18	56	49	37	51	30	19	78	53
25	25	49	22	63	56	43	57	34	22	87	59
30	28	55	26	70	63	49	64	39	26	97	66
35	33	62	30	78	70	55	71	44	30	107	73
40	37	69	35	86	78	62	79	49	35	118	81
45	42	76	40	95	86	70	87	55	39	130	89
50	47	84	45	105	95	78	96	61	44	142	97
55	52	93	51	115	105	86	105	68	50	155	107
60	58	102	57	125	115	95	115	75	56	170	116
65	64	111	64	137	125	105	126	82	62	185	127
70	70	121	71	149	137	115	137	90	69	201	138
75	77	132	79	161	149	126	149	98	76	217	149
80	84	144	87	175	162	138	161	106	83	235	161
85	92	156	95	189	176	150	174	116	92	254	174
90	100	168	104	204	190	163	188	125	100	274	187
95	108	182	114	219	206	177	203	135	109	295	201
100	117	196	124	236	222	192	219	146	119	317	216
105	127	211	135	253	239	208	235	157	130	341	232
110	136	226	146	272	256	224	252	169	141	365	248
115	147	243	158	291	275	242	270	181	152	391	265
120	158	260	171	311	295	261	289	194	165	418	283
125	169	278	185	332	315	280	309	208	178	446	301
130	181	297	199	355	337	301	330	222	192	476	321
135	194	317	214	378	359	323	352	237	206	507	341
140	207	337	229	402	383	346	374	253	222	539	363
145	220	359	246	428	407	371	398	269	238	573	385
150	235	382	263	454	432	397	432	286	256	608	408

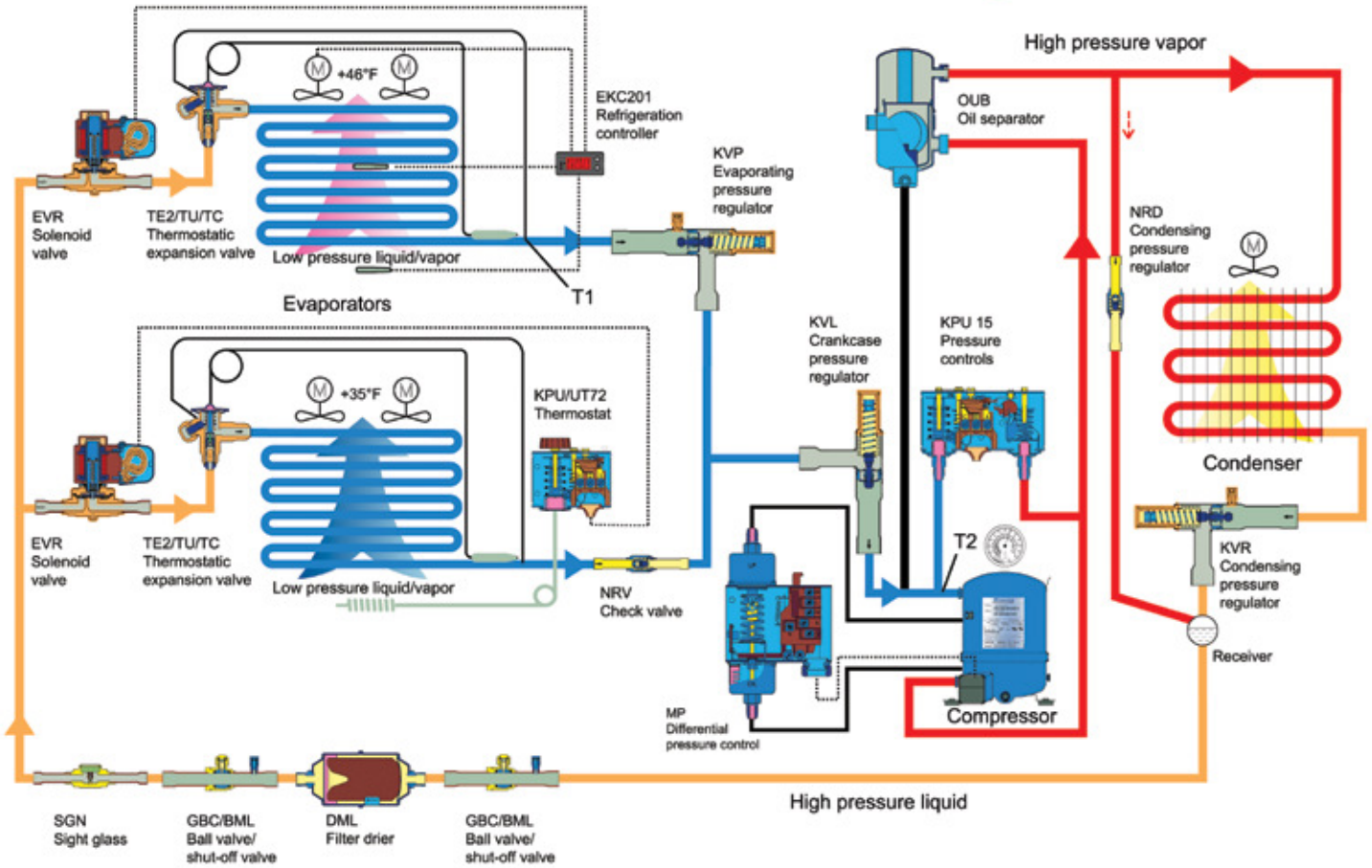

Formula for Superheat

Suction line temp - Evaporator temp = Superheat

60°F Suction line temp (T1) measured 6-12" from suction part of evaporator - 40°F Evaporator temp (T2) converted from suction pressure = 20°F Superheat

How to Contact Danfoss

BALTIMORE, MD

7941 Corporate Drive
Baltimore, MD 21236
410-931-8250 / Fax: 410-931-8256
www.danfoss.com/North_America

- Refrigeration & Air–Conditioning
- Industrial Controls
- Components for Oil Burners
- Scroll Technologies

TORONTO, ONT

E.S. Gallagher Sales Ltd.
920 Caledonia Road
Unit 3B
Toronto, ON M6B 3Y1
Canada
800-430-6754 / Fax: 416-781-6734
www.esgallagher.com

- Refrigeration & Air–Conditioning

GLENS FALLS, NY

Danfoss Flomatic Valves
15 Pruyn's Island Drive
Glens Falls, NY 12801-4424
800-833-2040 / Fax: 800-314-3155
www.danfossflomatic.com

- Water Controls

LOVES PARK, IL

Danfoss Drives
4401 N. Bell School Road
Loves Park, IL 61111
815-639-8600 / Fax: 815-639-8000
www.namc.danfoss.com

- Drives; Industrial Sales

MILWAUKEE, WI

8800 W. Bradley Road
Milwaukee, WI 53224
414-355-8800 / Fax: 414-355-6117
www.namc.danfoss.com
www.us.water.danfoss.com

- Danfoss Graham HVAC
- Danfoss Water & Wastewater
- Nessie Water Hydraulics

MISSISSAUGA, ONT

6711 Mississauga Rd, Ste. 410
Mississauga, ON L5N 2WS
Canada
905-285-2050 / Fax: 905-285-2055
www.danfoss.ca

- Heating Controls
- Motion Controls

SOMERSET, NJ

Danfoss Bauer
31 Schoolhouse Road
Somerset, NJ 08873- 1212
732-469-8770 / Fax: 732-469-8773
www.namc.danfoss.com

- Gearmotors

TALLAHASSEE, FL

Danfoss Turbocor
1769 Paul Dirac Dr.
Tallahasee, FL 32310
850-504-4800 / Fax: 850-575-2126
www.turbocor.com

- Oil-free Compressors for Refrigeration and Air Conditioning

About Danfoss Inc.

Danfoss Inc. is part of Danfoss A/S, a global enterprise, headquartered in Nordborg, Denmark. The Danfoss organization comprises three business segments: refrigeration and air-conditioning, motion controls, and heating & water. With 50 manufacturing plants in 18 countries and sales offices in over 100 countries, customers everywhere know Danfoss as dependable, reliable, and innovative. Danfoss is ISO 14001 certified.

We have a strong commitment to our people, technology, innovation, and the environment.

Danfoss, Refrigeration and Air-Conditioning Division, 7941 Corporate Drive, Baltimore, MD 21236 Tel. 1-888-Danfoss, Fax 410-931-8256, www.danfoss.com/North_America

Danfoss can accept no responsibility for possible errors in catalogues, brochures and other printed material. Danfoss reserves the right to alter its products without notice. This also applies to products already on order provided that such alterations can be made without subsequential changes being necessary in specifications already agreed. All Trademarks in this material are property of the respective companies. Danfoss and the Danfoss logotype are trademarks of Danfoss A/S. All rights reserved.

USCOC.PK.000.C1.22

Produced by Danfoss 01.07