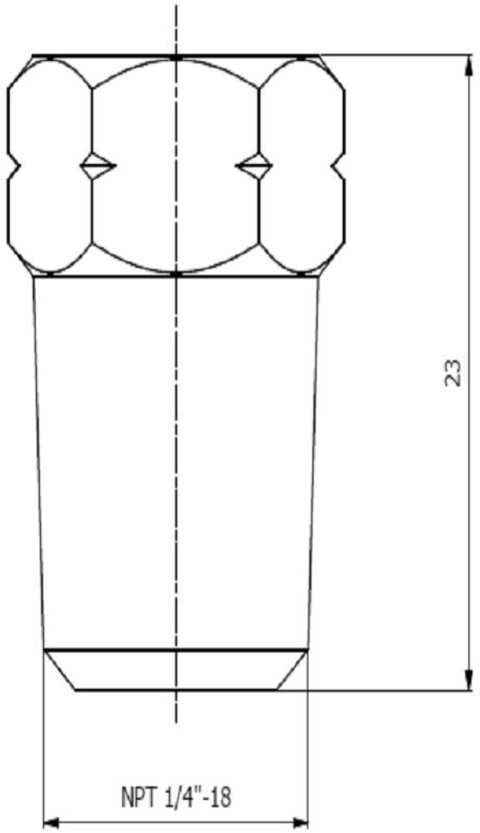

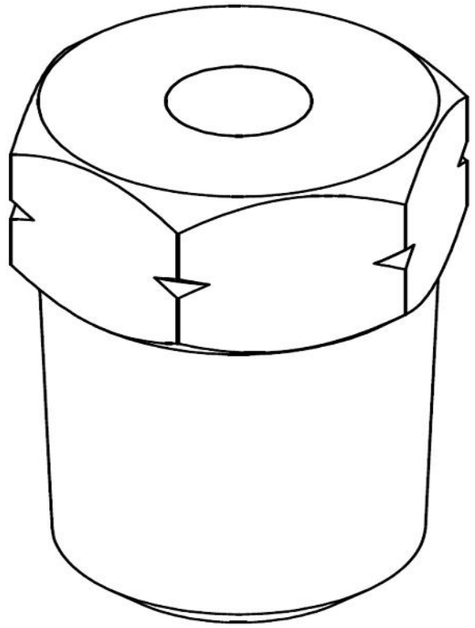

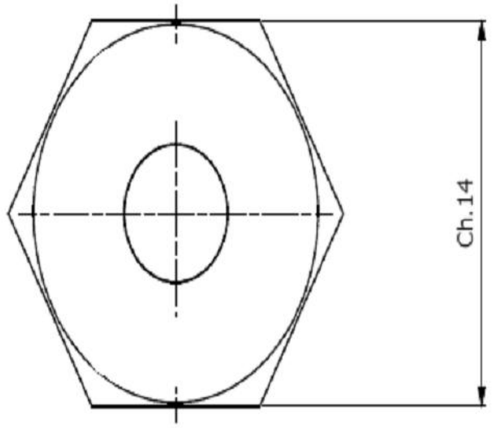

NOTES:

1. ASSEMBLY PHASES FOR FUSIBLE PLUG / ADAPTER IN DANFOSS RECEIVERS
 1. 1 CHECK THE CLEANLINESS OF THE THREAD ON THE NPT CONNECTION WHERE THE ACCESSORY WILL BE SCREWED AND, IF NEEDED, CLEAN IT USING SUITABLE SOLVENTS.
 1.2 APPLY A LAYER OF LEAK LOCK SEAL (LOCTITE 554) TO PLUG / ADAPTER, APPLY IT AT LEAST ON 3-4 THREADS.
 1.3 SCREW THE ACCESSORY MANUALLY AND APPLY TORUE 15 NM (18 NM MAX).
 1.4 WAIT 24 HOURS FOR THE SEALANT POLYMERIZATION BEFORE SUBJECTING THE VESSEL TO PRESSURE

2. DISASSEMBLY PHASES FOR PLUG / ADAPTER IN DANFOSS RECEIVERS
 2.1 TO DISASSEMBLE THE PLUG / ADAPTER, HEAT THE ACCESSORY AT AROUND 250°C AND DISASSEMBLY IT HOT, DON'T TOUCH THE OVERHEATED PARTS.
 2.2 APPLY TORUE 15 NM (18 NM MAX) TO DISASSEMBLE IT.

3. CONSIDERING THE STRESSES INCURRED DURING THE ASSEMBLING AND DISASSEMBLING ANY DAMAGE OR CRAKES OBSERVED, DANFOSS ALWAYS SUGGESTS TO REPLACE IT BY A NEW ONE.

General Tolerances Table	Drawing Status :					
				Surface Area (m2)		Key characteristic Critical characteristic According to Danfoss standard 502Z0024
				Estimated Mass (Kg)		
ISO 2768 m-K				Projection	Scale N/A	Size A3
						Material : N/A
Roughness (µm) -	A	ECR	14-03-2019	Danfoss		Designation ASSEMBLE & DISASSEMBLE OF FUSIBLE PLUG
	Revision	ECR Number	Date			
	Designer	PSR				
• ISO 8015 ISO 1101	Approval	AKS				
	Confidential: Property of Danfoss Commercial Compressors. Not to be handed over to copied or used by third party. Two or three dimensional reproduction of contents to be authorized by Danfoss CC.					Sheet 1 of 1 .0 Dwg N° 118U5170