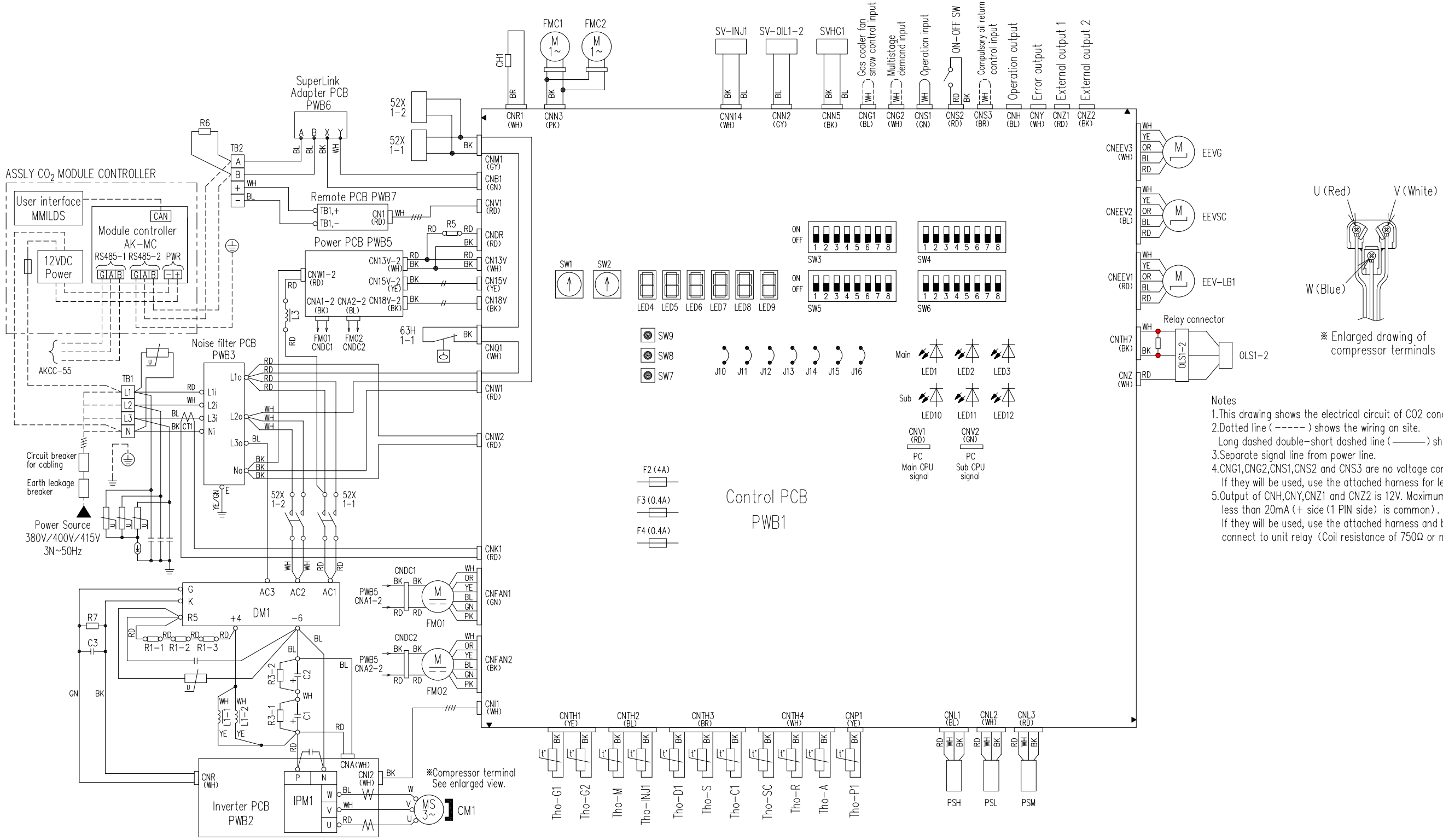

Notes
1. This drawing shows the electrical circuit of CO2 condensing unit.
2. Dotted line (-----) shows the wiring on site.
   Long dashed double-short dashed line (———) shows installation on site.
3. Separate signal line from power line.
4. CNG1, CNG2, CNS1, CNS2 and CNS3 are no voltage contact inputs.
   If they will be used, use the attached harness for level input.
5. Output of CNH, CNY, CNZ1 and CNZ2 is 12V. Maximum current is less than 20mA (+ side (1 PIN side) is common).
   If they will be used, use the attached harness and be sure to connect to unit relay (Coil resistance of 750Ω or more provided on site).

DWG-No: 118R0558 Rev : 00

Symbol	Name
C1,2	Electrolytic capacitor
C3	Filter capacitor
CH1	Crankcase heater
CM1	Compressor motor
CNA-Z	Connector
CT1	Compressor current
DM1	Diode module
EEVG	EEV for middle pressure receiver inlet
EEV-LB1	EEV for liquid bypass
EEVSC	EEV for subcooling coil
F	Fuse
FMC1,2	Inverter cooling fan
FMO1,2	Fan motor
IPM1	Intelligent power module
J10	Spare
J11,12	Power supply, voltage switching

Symbol	Name
J13	External input signal type switching
J14~16	Spare
L1-1,2	DC reactor
L3	Reactor
LED1	Main, inspection (red)
LED2	Main, normal (green)
LED3	Main, service (green)
LED4~6	7-segment LED (function display)
LED7~9	7-segment LED (data display)
LED10	Sub, normal (green)
LED11	Sub, inspection (red)
LED12	Sub, service (green)
OLS1-2	Oil level sensor
PSH	High pressure sensor
PSL	Low pressure sensor
PSM	Middle pressure sensor

Symbol	Name
PWB1~3,5~7	Printed wiring board
R1-1,2,3	Inrush suppression resistance
R3-1,2	Discharge resistance
R5	Drop resistance
R6	Termination resistance
R7	Filter resistance
SVHG1	Solenoid valve for hot gas bypass
SV-INJ1	Solenoid valve for gas injection
SV-OIL1-2	Solenoid valve for oil return
SW1	Compressor low pressure control setting (10s)
SW2	Compressor low pressure control setting (1s)
SW3-1~3	Spare
SW3-4	Protection start II cancel
SW3-5	Gas cooler fan control
SW3-6	Spare
SW3-7	Compressor total operation time reset

Symbol	Name
SW3-8	Spare
SW4-1~4	Model selection
SW4-5~8	Spare
SW5-1~3	For target middle pressure adjustment
SW5-4,5	Spare
SW5-6~8	Pressure check operation mode
SW6-1~3	Spare
SW6-4	Presence of subcooling suppression control
SW6-5	Oil level error/oPE display switching
SW6-6	Presence of regular inspection and maintenance contract
SW6-7	Oil level error
SW6-8	Spare
SW7	Data erase/write
SW8	7-segment display (1s)

Symbol	Name
SW9	7-segment display (10s)
TB1,2	Terminal block
Tho-A	Outdoor air temp. sensor
Tho-C1	Under dome temp. sensor
Tho-D1	Discharge pipe temp. sensor
Tho-G1	Gas cooler temp. sensor 1 (inlet)
Tho-G2	Gas cooler temp. sensor 2 (outlet)
Tho-INJ1	Gas injection inlet temp. sensor 1
Tho-M	Middle pressure receiver inlet temp. sensor
Tho-P1	Power transistor temp. sensor
Tho-R	Liquid feed pipe temp. sensor
Tho-SC	Subcooling coil temp. sensor
Tho-S	Suction pipe temp. sensor
ON-OFF SW	Operation switch
52X1-1,2	Magnetic contactor for CM
63H1-1	High pressure switch