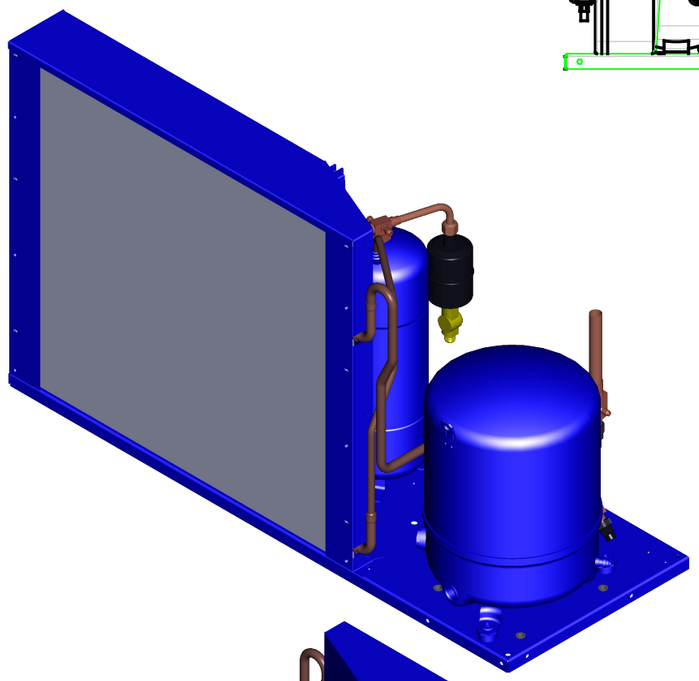

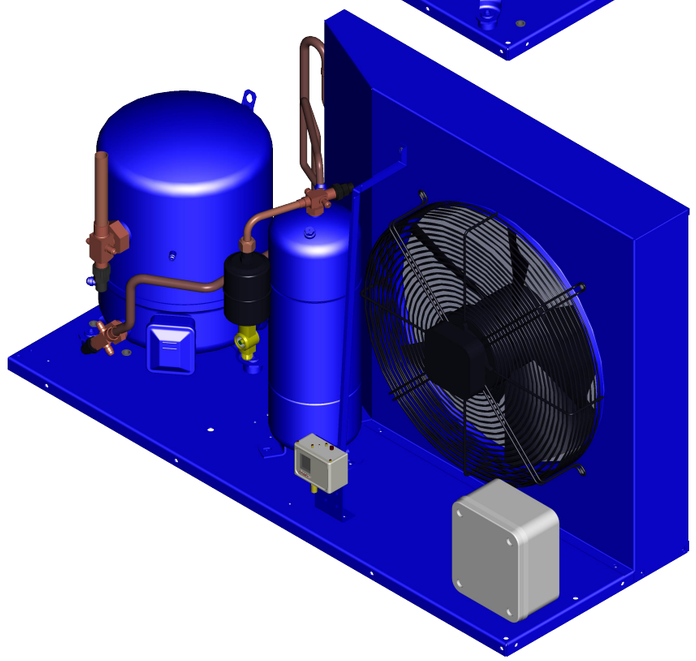

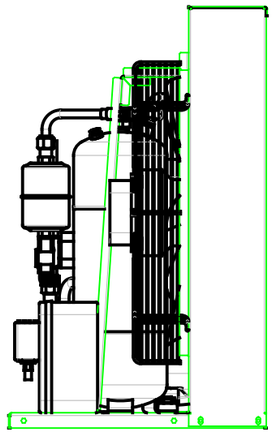

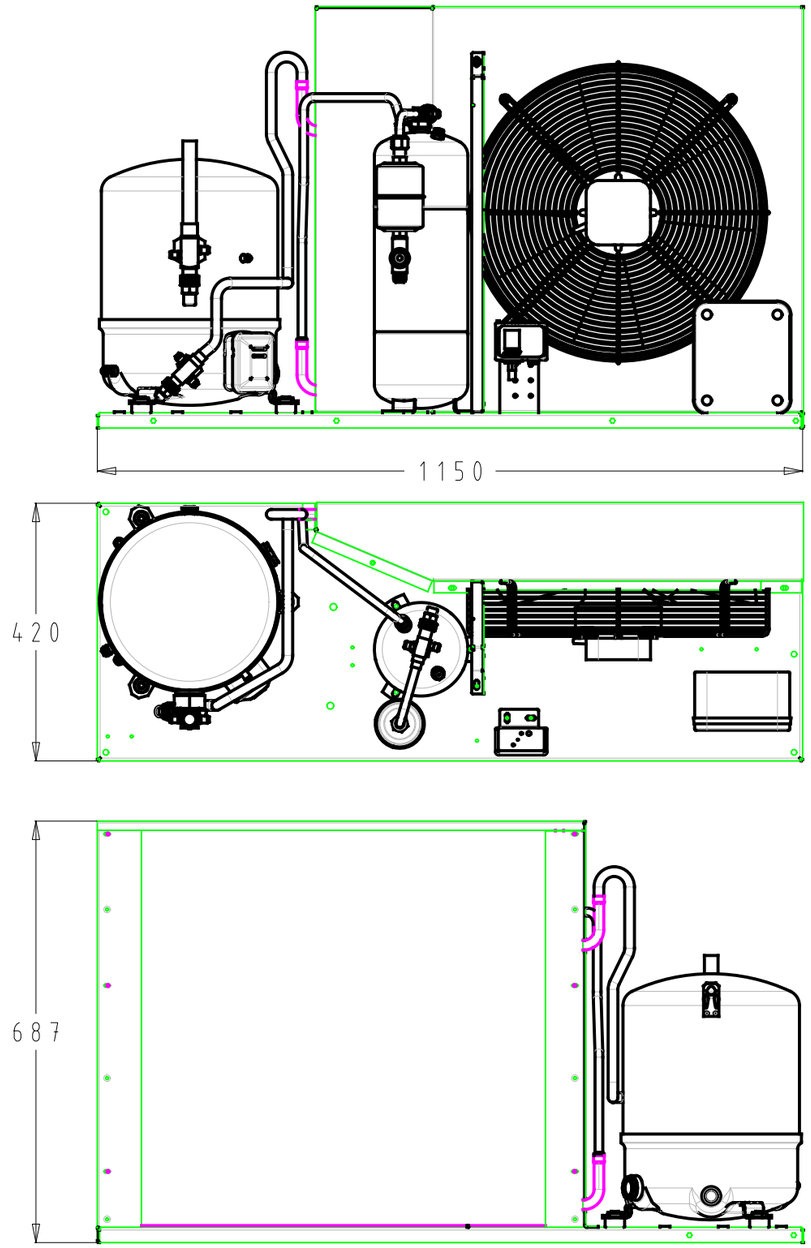

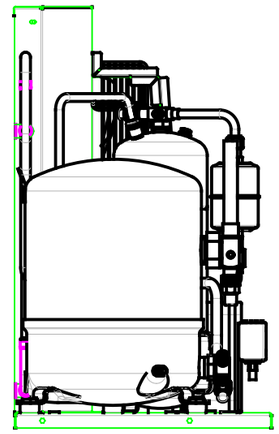

General Tolerances Table	Drawing Status :			Production print		
				Surface Area (m2)		Key characteristic Critical characteristic According to Danfoss standard 502Z0024
Ver Tabela See Table				Estimated Mass (Kg)		
	C		13-02-2020	Projection	Scale 1/10	Size A3
	B		03-04-2019			Material : See Notes
Roughness (µm)	A		29-03-2018	Danfoss		Designation HJM050D20
	Revision	ECR Number	Date			
	Designer	Flávio Thomaz				
• ISO 8015 ISO 1101	Approval	Dener Lemos				
	Confidential: Property of Danfoss Commercial Compressors. Not to be handed over to copied or used by third party. Two or three dimensional reproduction of contents to be authorized by Danfoss CC.					Sheet 6 of 6 C.3 Dwg N° 115F0034 C