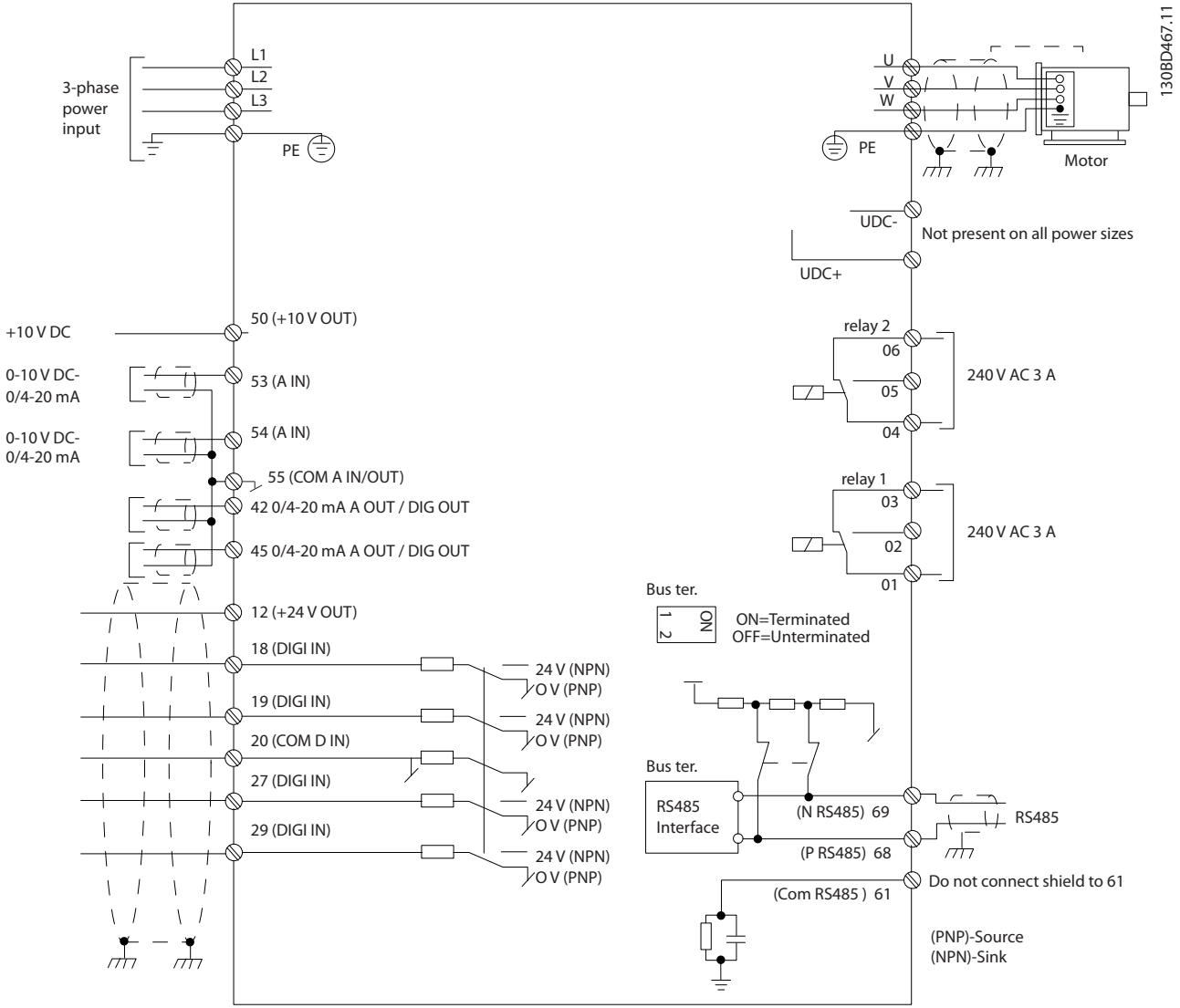
130BD467.11
3-phase
power
input
L1
L2
L3
PE
U
V
W
PE
Motor
UDC-
Not present on all power sizes
UDC+
+10 V DC
50 (+10 V OUT)
0-10 V DC-
0/4-20 mA
53 (A IN)
0-10 V DC-
0/4-20 mA
54 (A IN)
55 (COM A IN/OUT)
42 0/4-20 mA A OUT / DIG OUT
45 0/4-20 mA A OUT / DIG OUT
12 (+24 V OUT)
18 (DIGI IN)
19 (DIGI IN)
20 (COM D IN)
27 (DIGI IN)
29 (DIGI IN)
24 V (NPN)
0 V (PNP)
relay 2
06
05
04
240 V AC 3 A
relay 1
03
02
01
240 V AC 3 A
Bus ter.
ON
1 2
ON=Terminated
OFF=Unterminated
Bus ter.
RS485
Interface
(N RS485) 69
(P RS485) 68
RS485
Do not connect shield to 61
(Com RS485) 61
(PNP)-Source
(NPN)-Sink