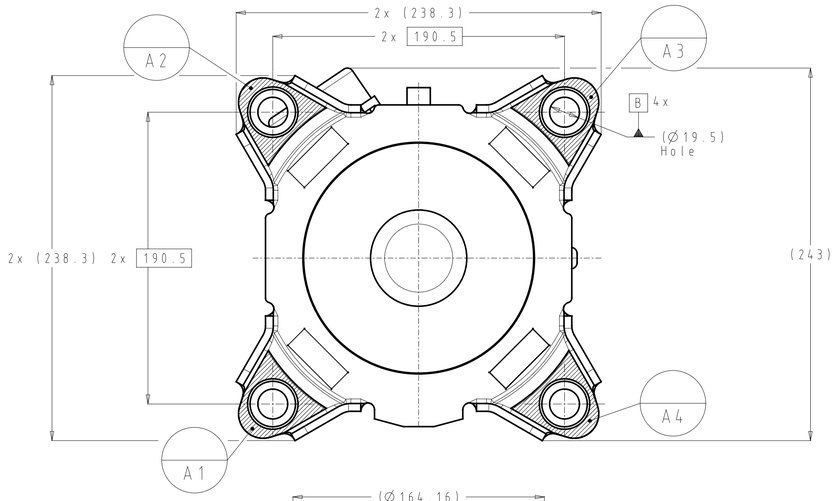

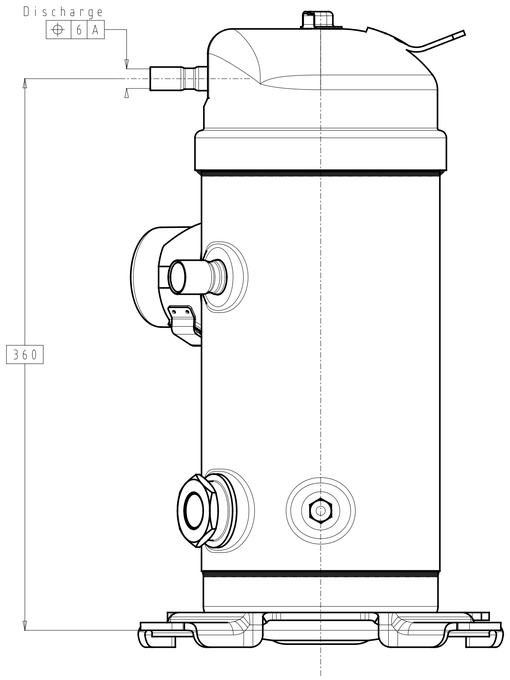

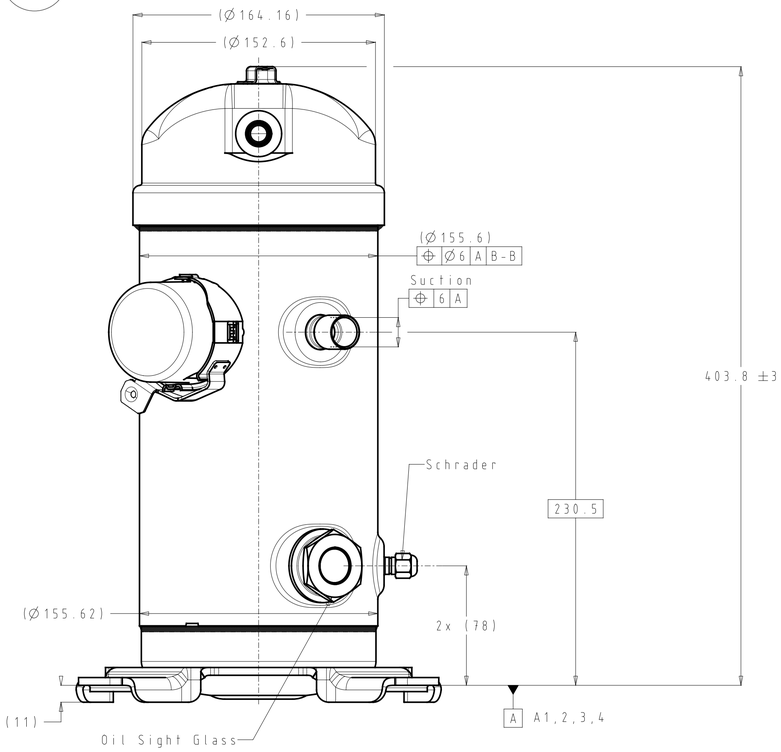

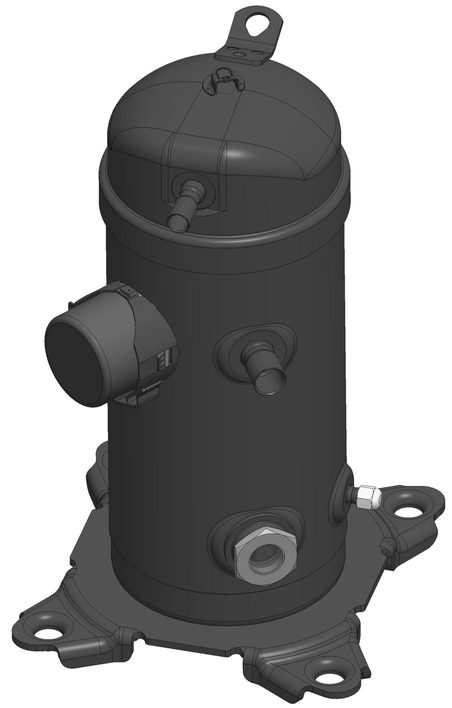

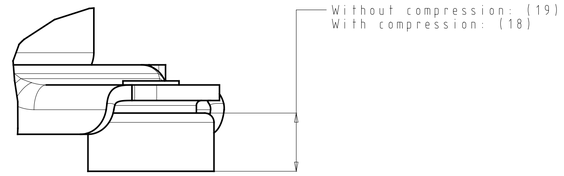

Rubber Grommet
SCALE 1/1

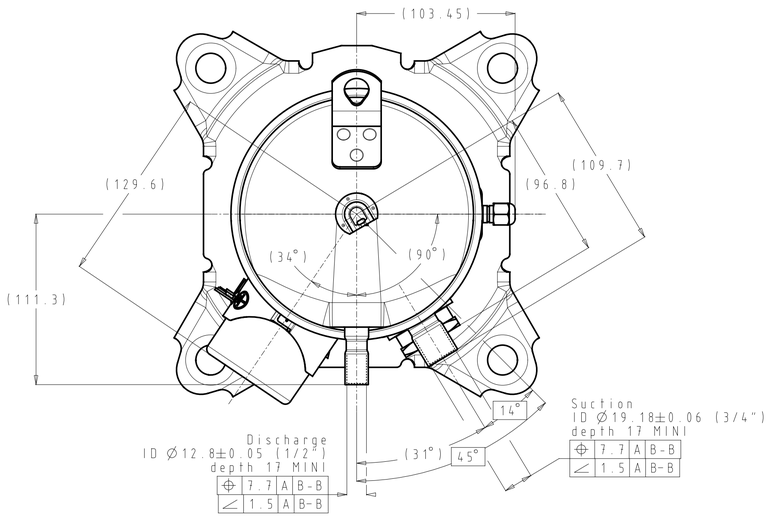

Part number
8590076P01AA

General Tolerances Table	Drawing Status :	Production print			
N/A			Surface Area (m2)		Key characteristic Critical characteristic According to Danfoss standard 502Z0024
			Estimated Mass (Kg)		
			Projection	Scale 1/2	Size A1
Roughness (µm) N/A	AA	ECR-2022-13987	19-09-2022		Material : -
	Revision	ECR Number	Date		Designation
	Designer	Zhang Qing			VZH59F outline
	Approval	Hu Qian			
• ISO 8015 ISO 1101	Confidential: Property of Danfoss Commercial Compressors. Not to be handed over to copied or used by third party. Two or three dimensional reproduction of contents to be authorized by Danfoss CC.				Sheet 1 of 1
					AA.2 Dwg.N° 8590076 AA