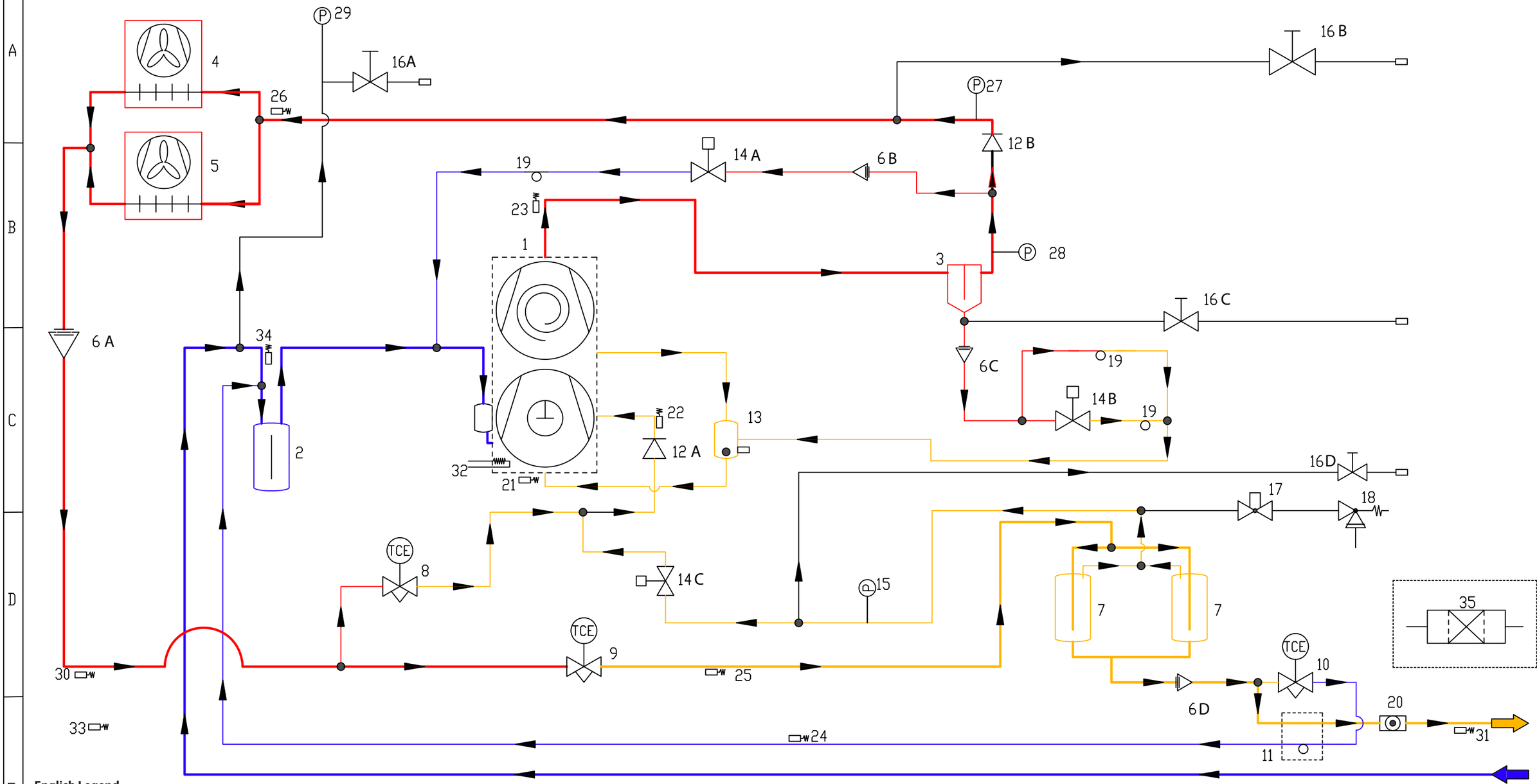

English Legend

1. Two stage compressor (scroll-rotary)
2. Suction line Accumulator
3. Oil Separator
4. DC Fan assembly
5. Micro Channel Heat Exchanger with Fan
6(A,B,C,D). Strainer
7. Liquid Receiver
8. EEV for liquid bypass
9. EEV for Middle pressure receiver inlet
10. EEV for Subcooling coll
11. Subcooling coil
12(A,B). Check Valve
13. Oil pod
14(A,B,C). Solenoid Valve
15. Middle Pressure sensor
16(A,B,C,D). Service Valve
17. Shut off Valve
18. Pressure Relief valve
19. Capillary
20. Sight glass
21. Under dome temperature sensor
22. Injection inlet temperature sensor
23. Discharge pipe temperature sensor
24. Subcooling coil temperature sensor
25. Middle pressure receiver inlet temperature sensor
26. Gas cooler temperature sensor
27. High pressure sensor
28. High Pressure switch
29. Low pressure sensor
30. Gas cooler temperature sensor
31. Liquid feed pipe temperature sensor
32. Crankcose Heater
33. Outside air temperature sensor
34. Suction pipe temperature sensor
35. Filter Drier (Accessory)

High Pressure Circuit
Low Pressure Circuit
Medium Pressure Circuit

LCA011H004

General Tolerances Table	Drawing Status : PRODUCTION PRINT					
				Surface Area (m2)		Key characteristic Critical characteristic According to Danfoss standard 502Z0024
-				Estimated Mass (Kg)	-	
				Projection	Scale -	Size A3
						Material : -
Roughness (µm)	AA	ECR_2022_XXXX	13.05.2022	Danfoss		Designation PID, OPTYMA iCO2
	Revision	ECR Number	Date			
	Designer	PRABHU				
-	Approval	ASHOK KUMAR				
	Confidential: Property of Danfoss Commercial Compressors. Not to be handed over to copied or used by third party. Two or three dimensional reproduction of contents to be authorized by Danfoss CC.					Sheet 1 of 1 AA.1 Dwg N° 118A5324 AA