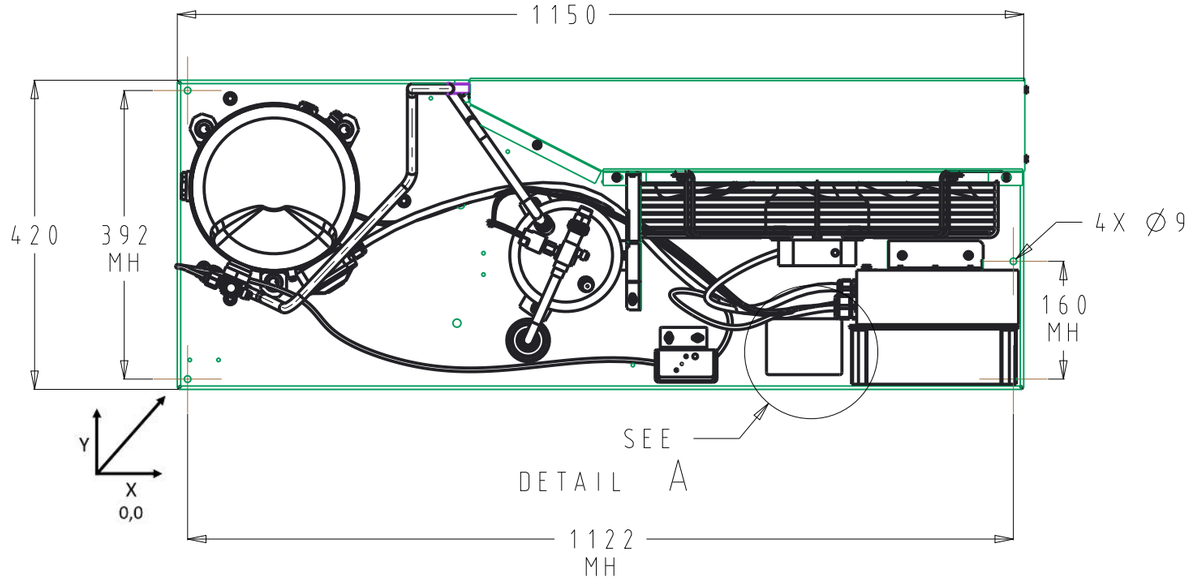

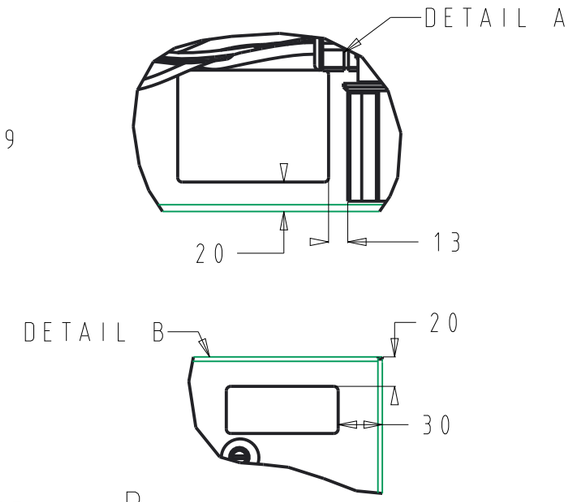

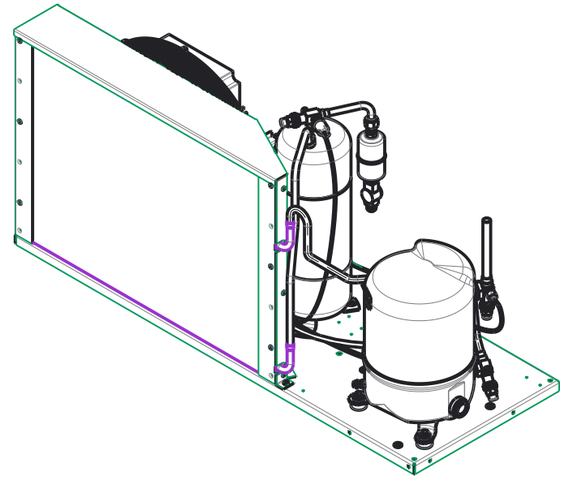

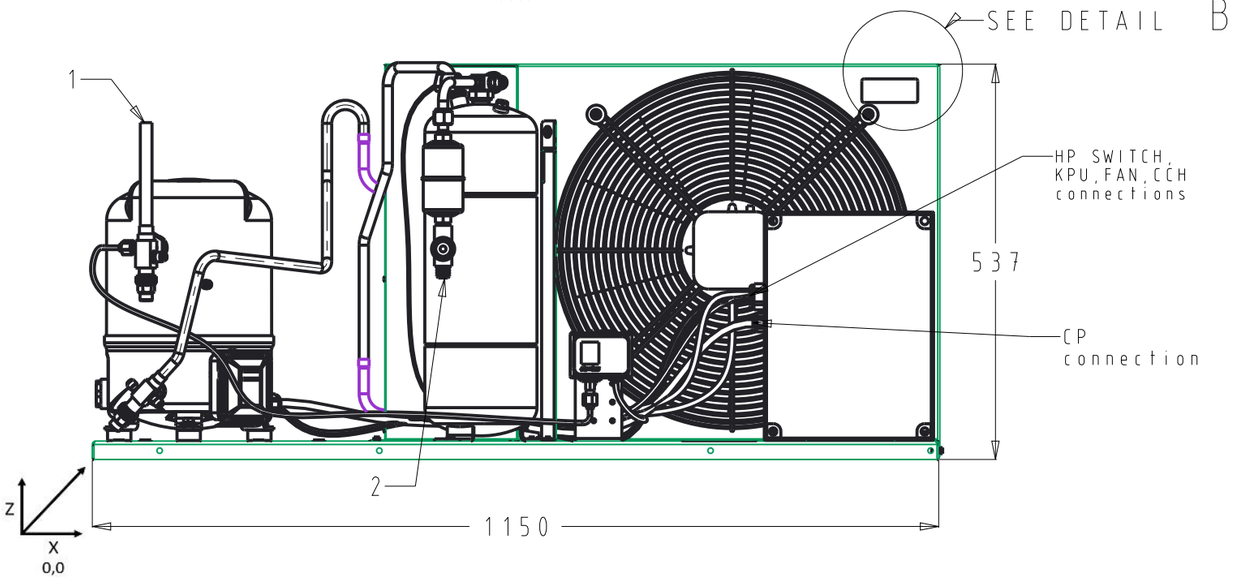

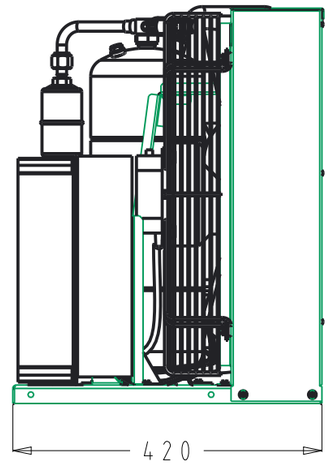

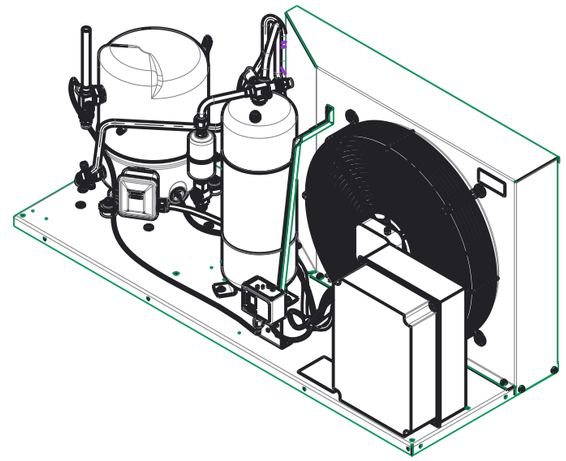

CONN	PORT	X	Y	Z	Diameter
1	SUCTION	73	138	458	5/8 in
2	LIQUID	477	67	247	1/2 in

Part number
115N0285
115N0286

NOTES:

1. MH ABREVIATION FOR MOUNTING HOLES.
2. In accordancewith RoHS Directive 2002/95/EC.
3. In accordance with negative list of Danfoss 500B0751.
4. Schrader core instalation according to PS-106.
5. Apply all labels as shown. Must be within 3° of horizonal.
6. In accordance with CU Product Standard PS-106.
7. Discharge valves must remain fully opened prior to shipping
8. Unit must be charged with at least 15-20 PSI of Nitrogen prior to shipping.
9. Tolerance does not apply to tubes and labels position dimensions, dimensions as reference to orientation.

General Tolerances Table

Unless otherwise spec.
Units= mm
Tol= ±7.0
Ang=±1.0°

Roughness (µm)
N/A

ISO 8015
ISO 1101

Drawing Status : **Change in progress**

			Surface Area (m2)	
			Estimated Mass (Kg)	
			Projection	Scale 1/10
				Size A3
AA	ECR-2021-12960	08-02-2021		
Revision	ECR Number	Date		
Designer	Miguel Camacho			
Approval	Vinicius Schwab			

▽ Key characteristic
▽ Critical characteristic According to Danfoss standard 502Z0024

Material : See Notes

Designation
HJZ036D39

Confidential: Property of Danfoss Commercial Compressors. Not to be handed over to copied or used by third party. Two or three dimensional reproduction of contents to be authorized by Danfoss CC.

Sheet 1 of 1
AA.7 Dwg N° 115N0285 AA