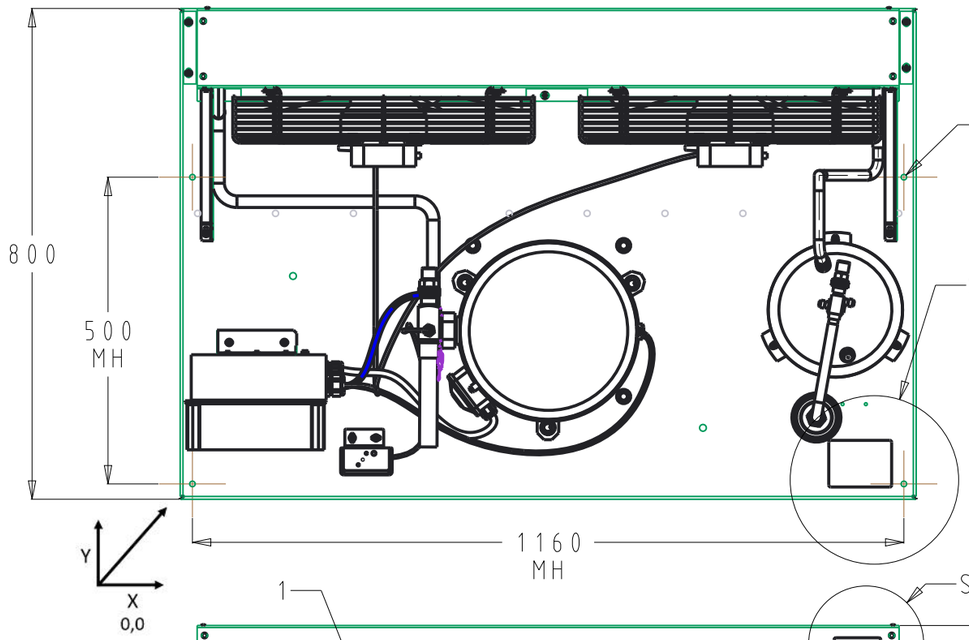

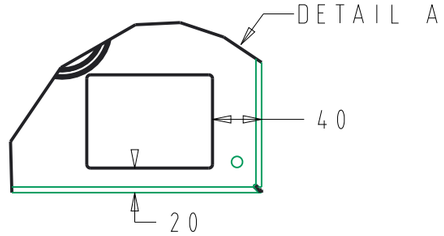

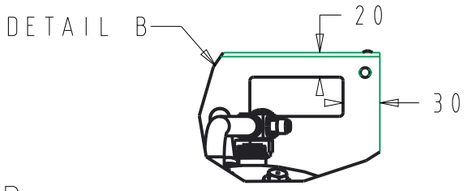

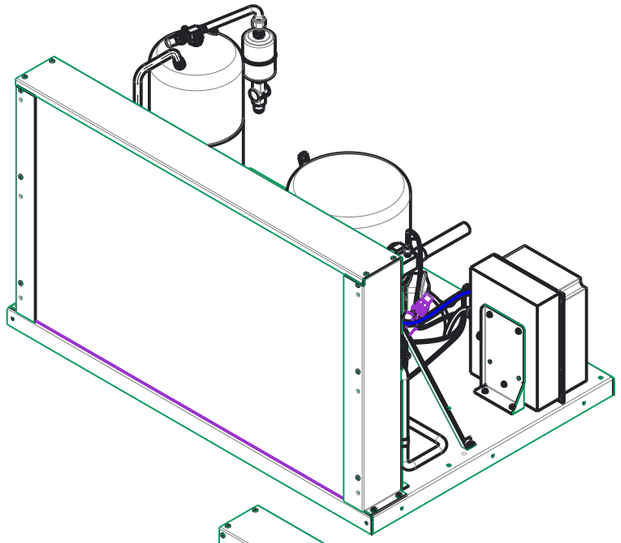

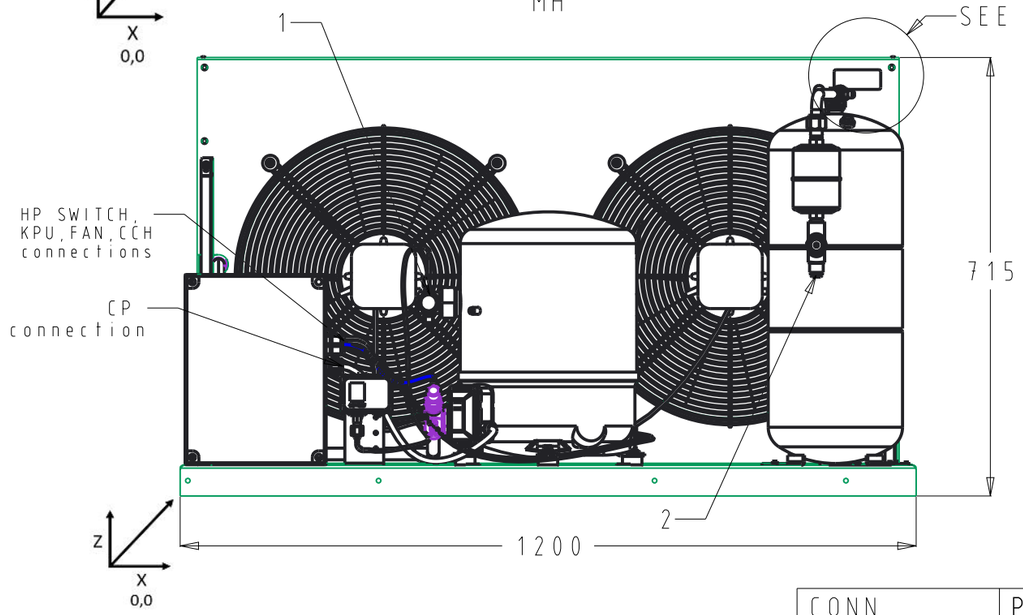

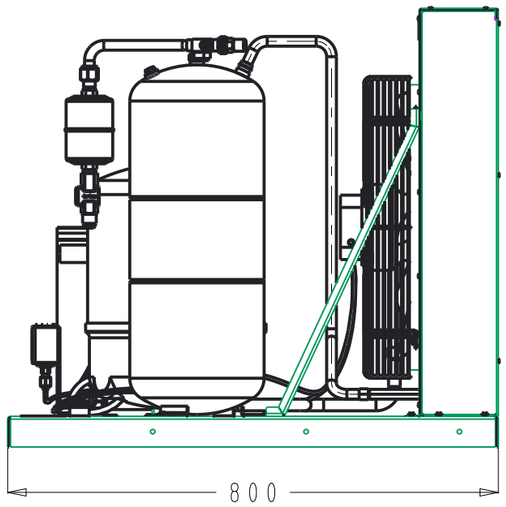

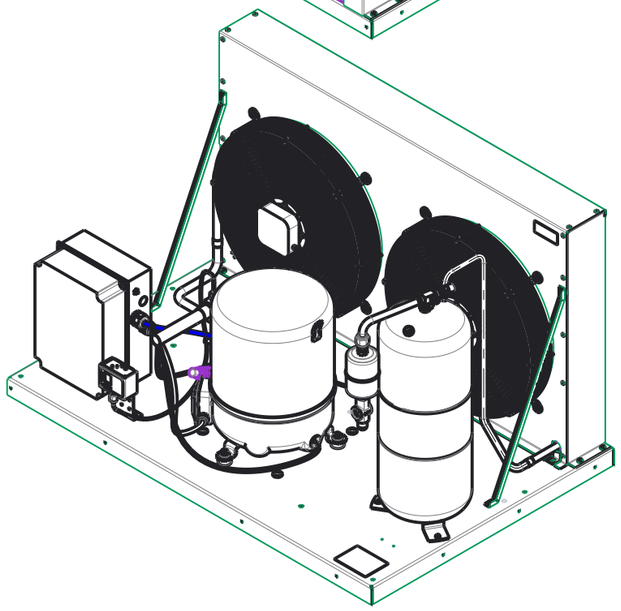

CONN	PORT	X	Y	Z	Diameter
1	SUCTION	404	85	314	1"1/32in
2	LIQUID	1040	133	357	5/8 in

Part number

115N0312

NOTES:

1. MH ABREVIATION FOR MOUNTING HOLES.
2. In accordancewith RoHS Directive 2002/95/EC.
3. In accordance with negative list of Danfoss 500B0751.
4. Schrader core instalation according to PS-106.
5. Apply all labels as shown. Must be within 3° of horizonal.
6. In accordance with CU Product Standard PS-106.
7. Discharge valves must remain fully opened prior to shipping
8. Unit must be charged with at least 15-20 PSI of Nitrogen prior to shipping.
9. Tolerance does not apply to tubes and labels position dimensions, dimensions as reference to orientation.

General Tolerances Table

Unless otherwise spec.
Units= mm
Tol= ±7.0
Ang°= ±1.0°

Roughness (µm)
N/A

ISO 8015
ISO 1101

Drawing Status : **Production print**

Revision	ECR Number	Date
AA	ECR-2021-12960	08-02-2021

Designer: Miguel Camacho
Approval: Vinicius Schwab

Surface Area (m2)
Estimated Mass (Kg)
Projection
Scale 7/100
Size A3

Key characteristic
Critical characteristic
According to Danfoss standard 502Z0024

Material : See Notes

Designation
HGZ080D39

Confidential: Property of Danfoss Commercial Compressors. Not to be handed over to copied or used by third party. Two or three dimensional reproduction of contents to be authorized by Danfoss CC.

Sheet 1 of 1
AA.8 Dwg N° 115N0312
AA