APPROVED	
Name	
Date	

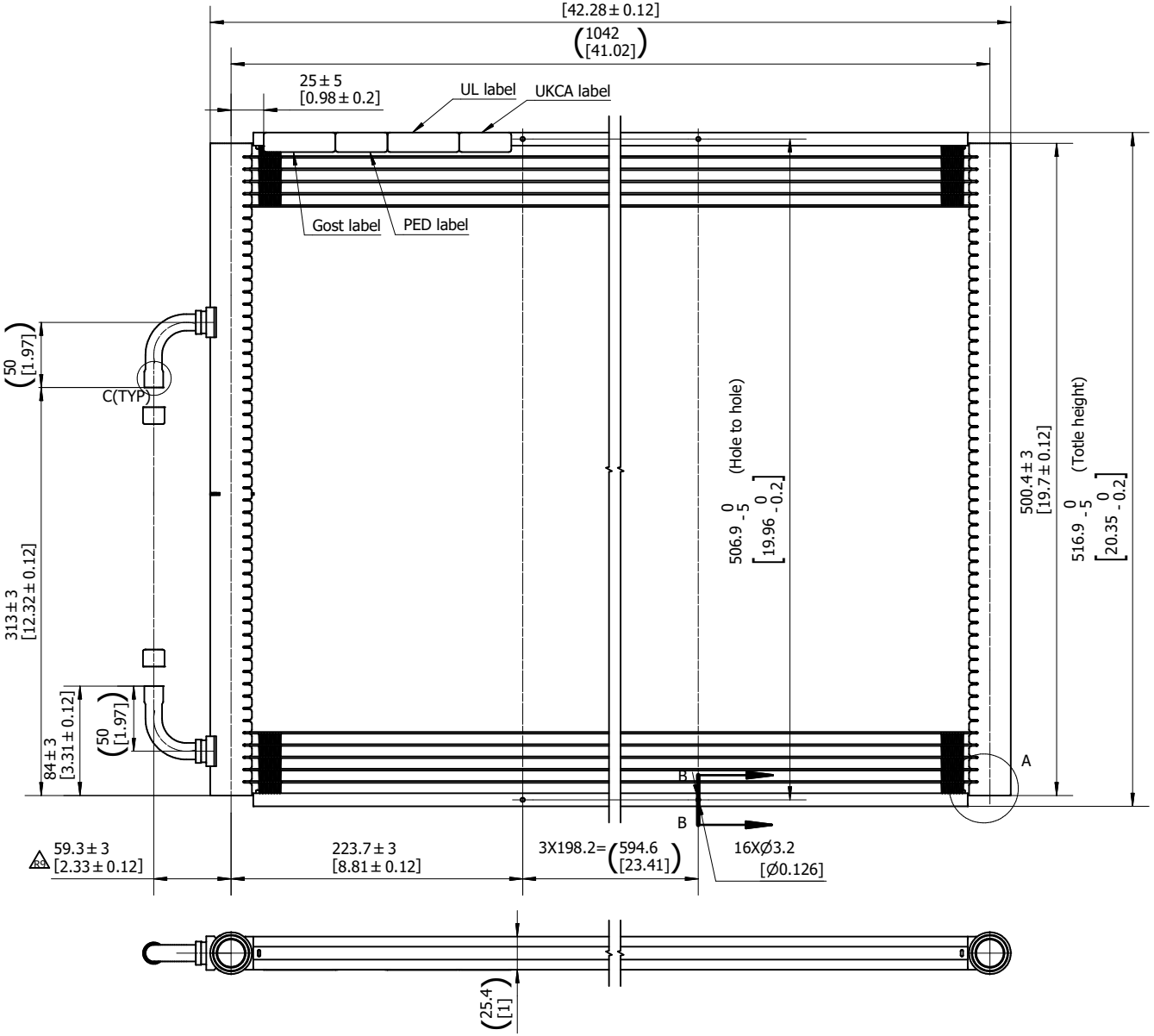

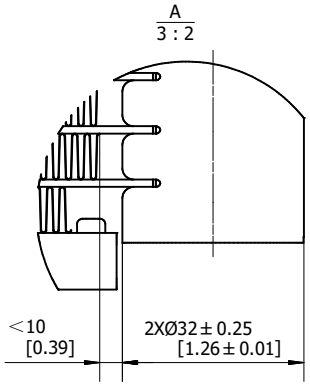

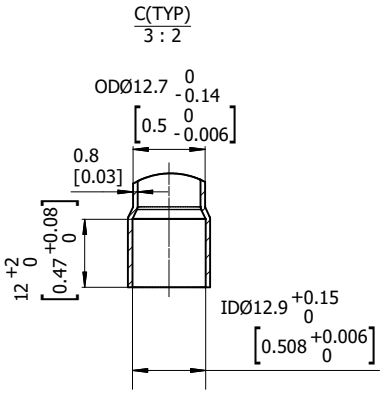

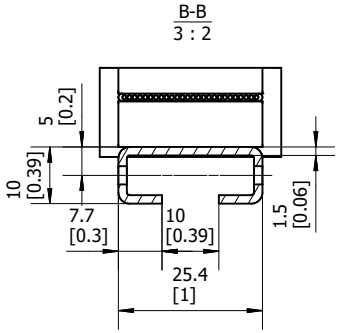

DISTRIBUTION

IN	28
OUT	24

Technical Specification:

1. MCHE product platform:C125(25.4S);
2. FPI=23;
3. Tube:25.4X1.3X26ports;
4. Tube material:9153;
5. Inlet and outlet tubes are copper;
6. Internal hold-up volume:1.15L;
7. PS:45bar,TS MIN/MAX:-40°C~121°C.

MRK	REVISION RECORD	DRN	DATE
	Change transitions to transition blocks and change tube material.	H.JIN	2023.01.26

Linear Tolerance Not Specified			
≤6	>6-30	>30-120	>120-400
±0.5	±1	±1.5	±2.5
>400-1000	>1000-2000	>2000-4000	
±4	±6	±8	

DRN	H.JIN
APP	
DATE	2013.08.21

Projection | Scale 2 : 5 | Size A2

Angle Tolerance Not Specified	
0°/90°/180°	Other Angle
±3°	±3°

Danfoss

Designation: MCHE condenser D1500-C

Customer PN:

NO.	X0-DF0081	REV.
WT.	6.574 kg	09

Confidential: Property of Danfoss A/S, Nordborg, Denmark.
Not to be handed over to, copied or used by third party. Two- or three dimensional reproduction of contents to be authorized by Danfoss A/S.