APPROVED	
Name	
Date	

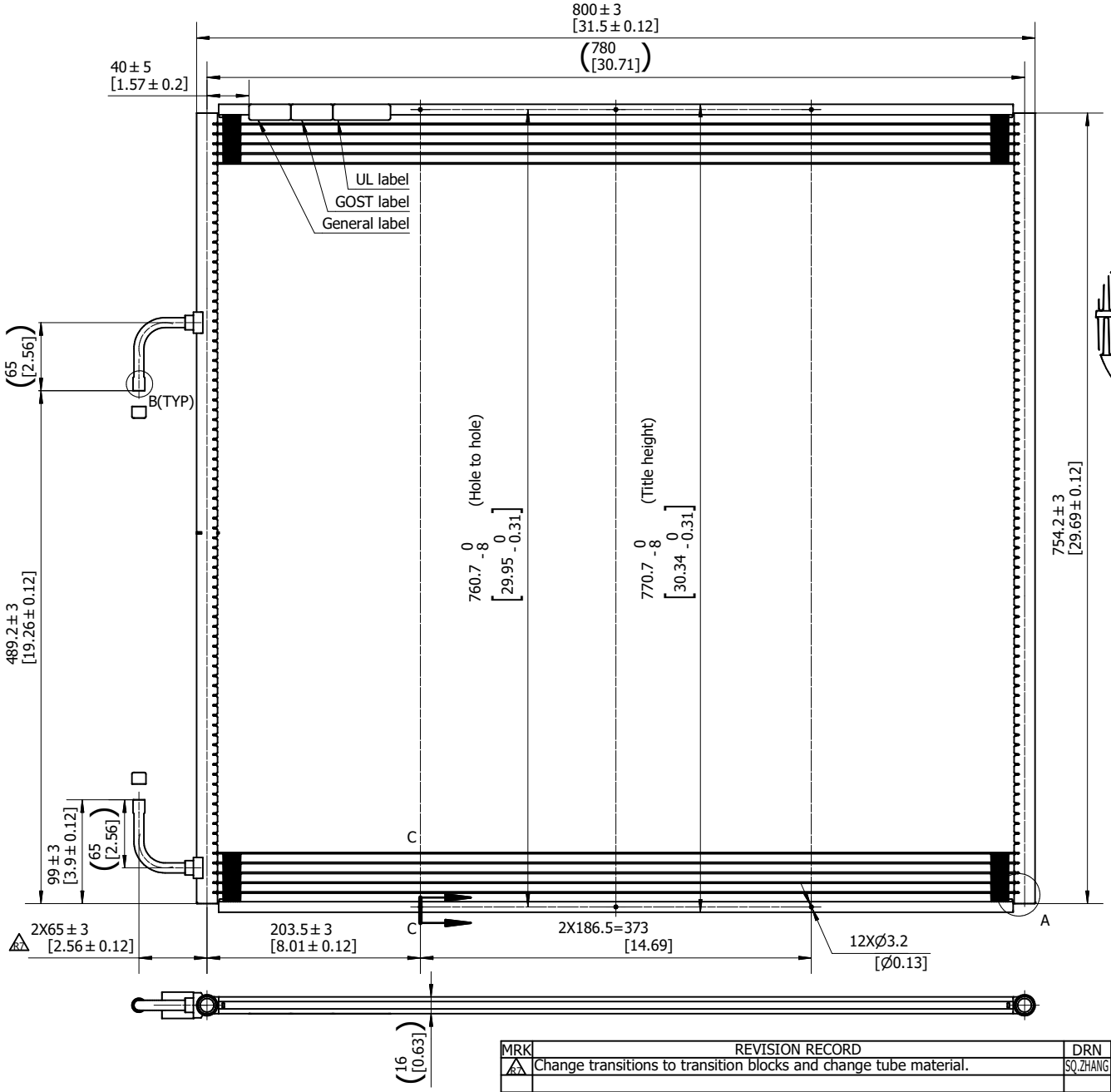

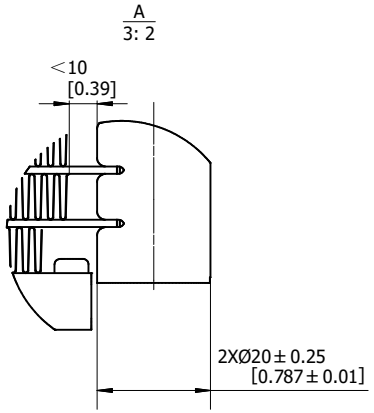

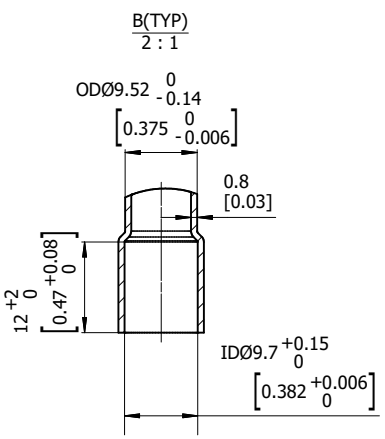

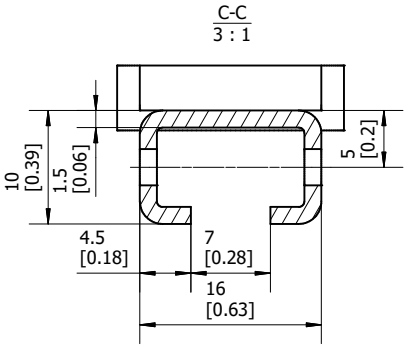

Technical requirements:

1. Product type:C116(16S);
2. FPI=23;
3. Tube:16X1.3X16 ports;
4. Tube material:9153;
5. Inlet and outlet tubes are copper;
6. Internal hold-up volume: 0.7L;
7. PS:45bar, TS MIN/MAX:-40°C~121°C.

Distribution

IN →	42
← OUT	37

MRK	REVISION RECORD	DRN	DATE
A2	Change transitions to transition blocks and change tube material.	SQ.ZHANG	2024.03.04

Linear Tolerance Not Specified			
≤6	>6-30	>30-120	>120-400
±0.5	±1	±1.5	±2.5
>400-1000	>1000-2000	>2000-4000	
±4	±6	±8	

Angle Tolerance Not Specified	
0°/90°/180°	Other Angle
±3°	±3°

Projection | Scale 1 : 3 | Size A2

DRN	JB.LIU
APP	
DATE	2021.01.04

Designation: MCHE condenser D1400-C

Customer PN:

NO.	X0-DF0151	REV.
WT.	4.508 kg	07

Confidential: Property of Danfoss A/S, Nordborg, Denmark.
Not to be handed over to, copied or used by third party. Two- or three dimensional reproduction of contents to be authorized by Danfoss A/S.