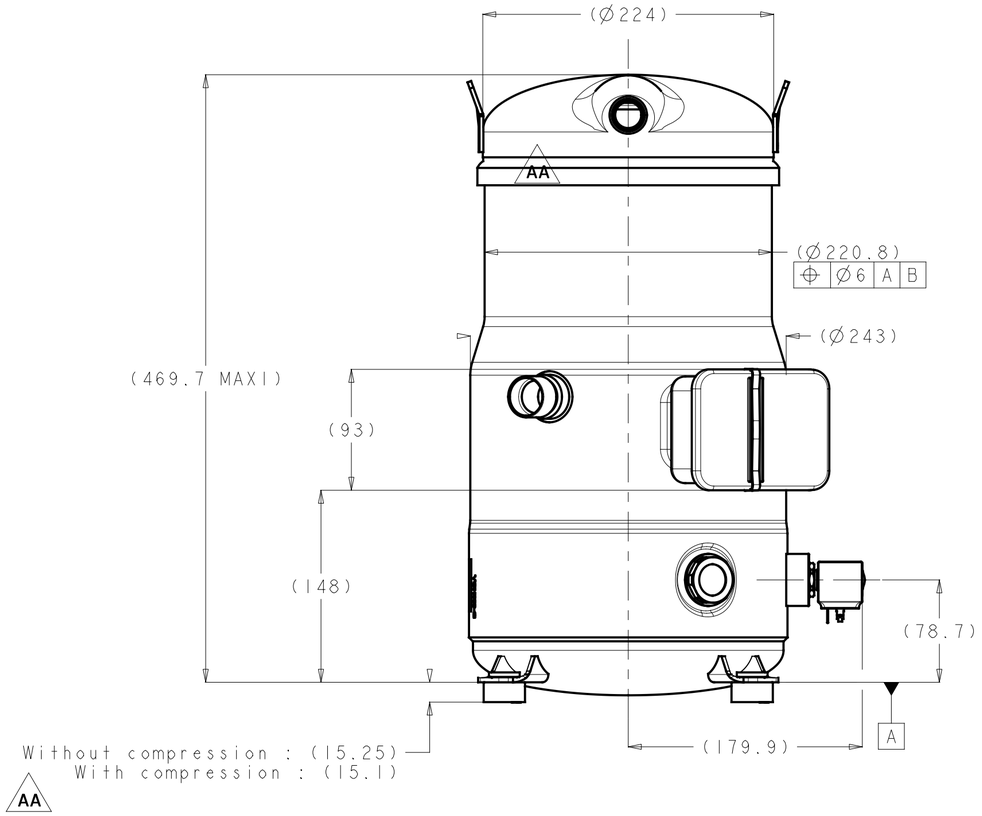

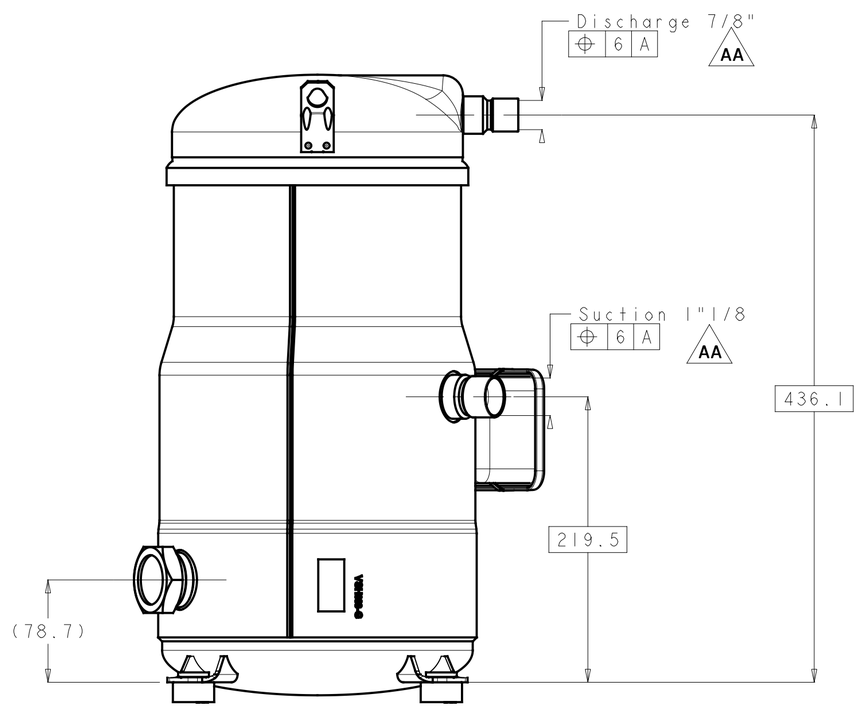

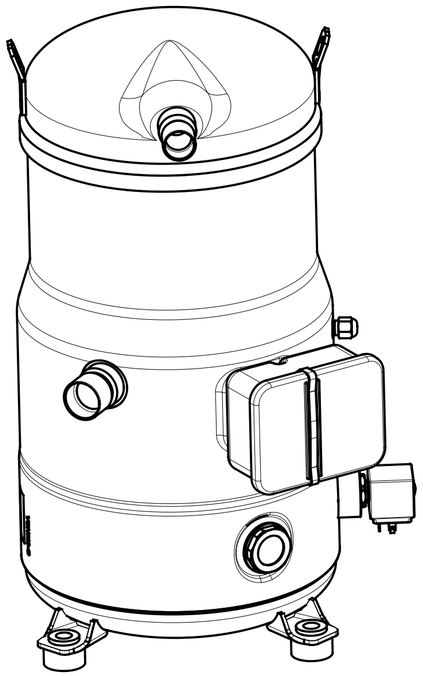

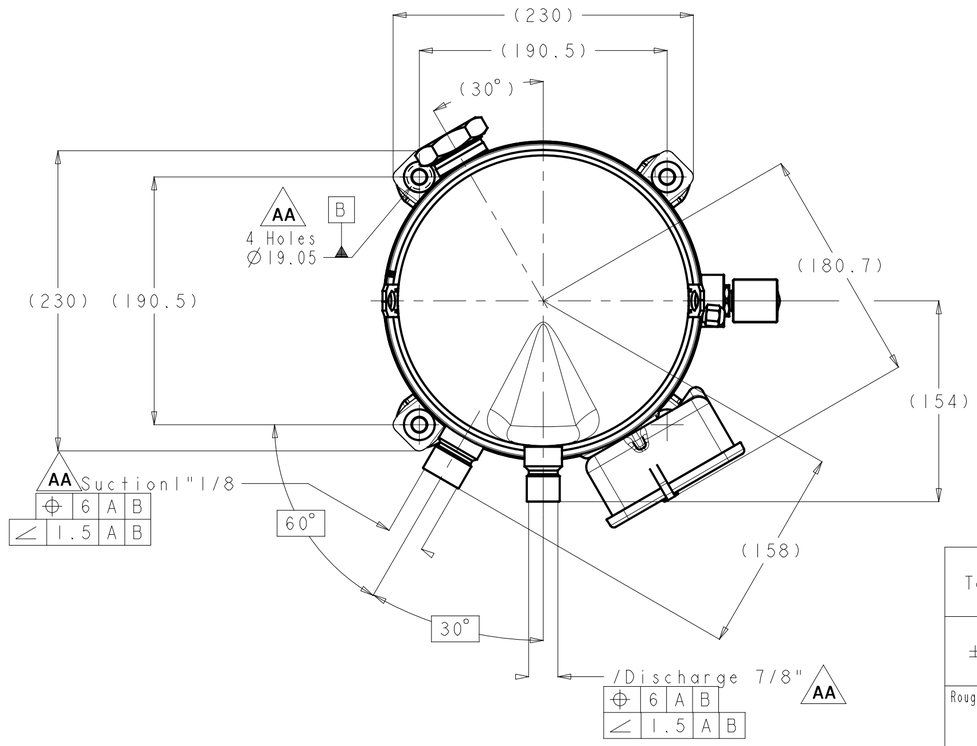

AA	Part number
	8560025P01D

General Tolerances Table	Drawing Status :	Production print				
				Surface Area (m2)		Key characteristic / Critical characteristic According to Danfoss standard 502Z0024
				Estimated Mass (Kg)		
±3 ANG° :±1°				Projection	Scale 3/10	Size A2
	AA	ECR-2024-15214	10-07-2024			Material : See Notes
Roughness (µm)	E	ECR-2014-5856	22-05-2014	Danfoss		Designation
	Revision	ECR Number	Date			Outline VSH088/VZH088/VZF088 CODE G/H AA
	Designer	Wang He				
• ISO 8015 ISO 1101	Approval	Xing Lili				
	Confidential: Property of Danfoss Commercial Compressors. Not to be handed over to copied or used by third party. Two or three dimensional reproduction of contents to be authorized by Danfoss CC.					Sheet 1 of 1
						AA.6 Dwg N° 8560025 AA