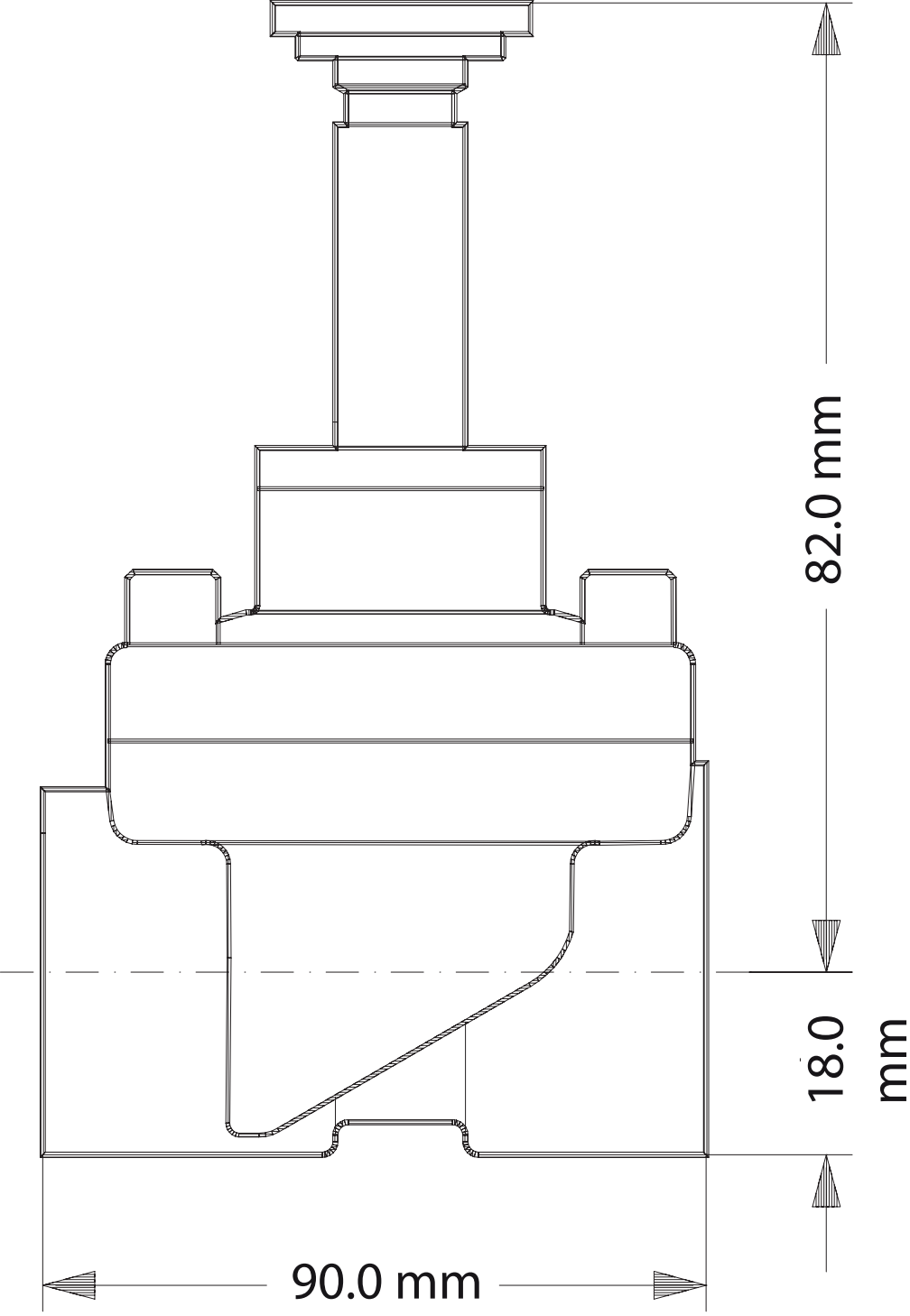
82.0 mm
18.0 mm
90.0 mm

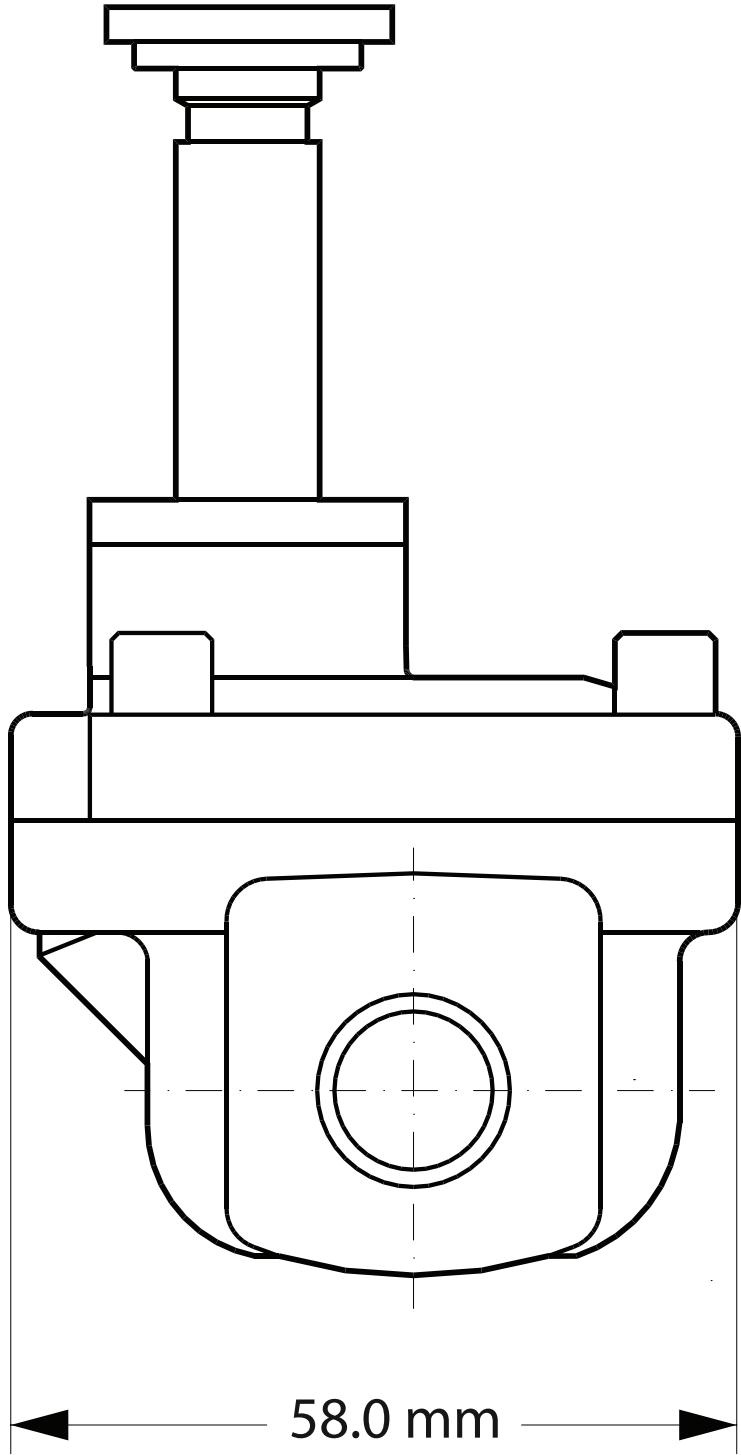
58.0 mm