NO	NOTE UNLESS OTHERWISE SPECIFIED
1	This is a general product drawing. Some product options are not covered by this drawing.
2	Connectors are not watertight without Mating connectors.

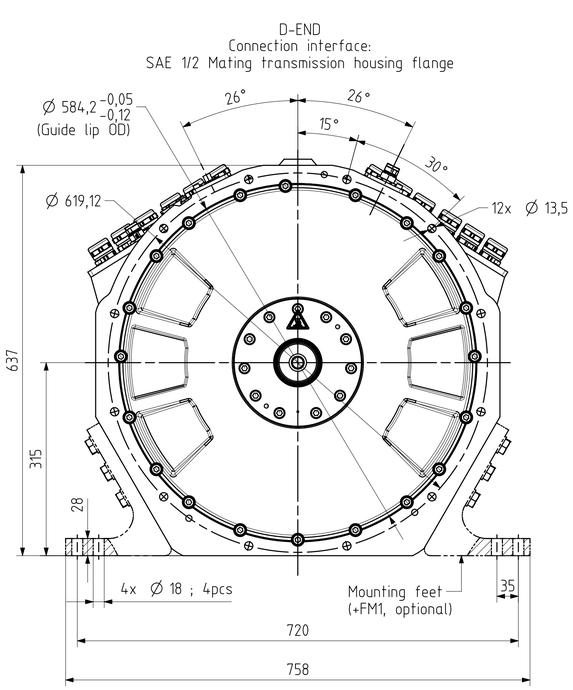

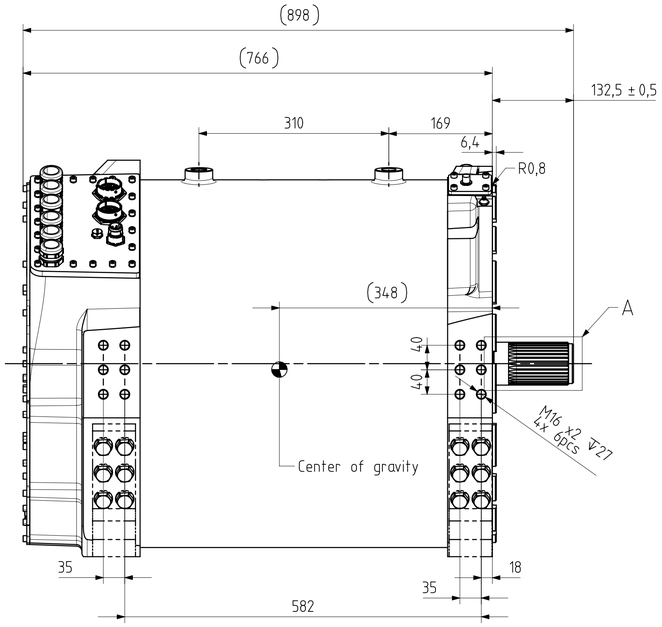

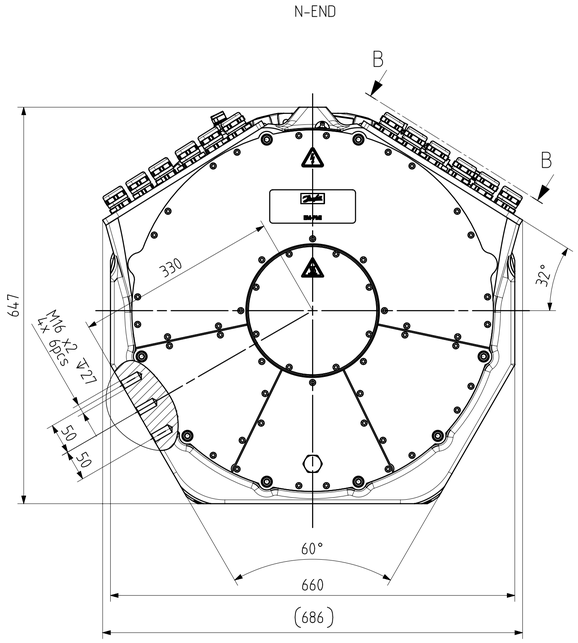

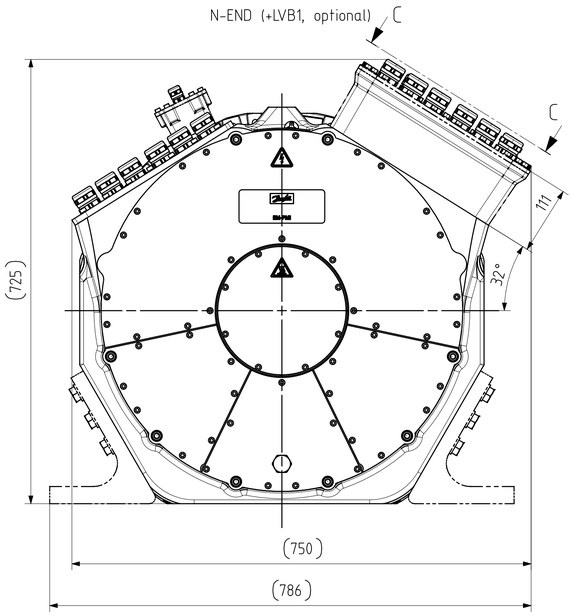

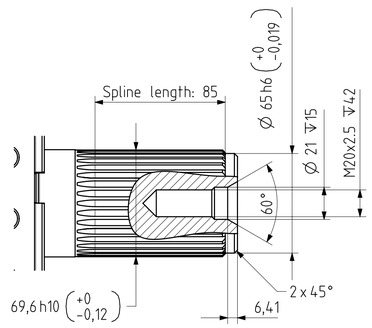

DETAIL A
SCALE 1:2

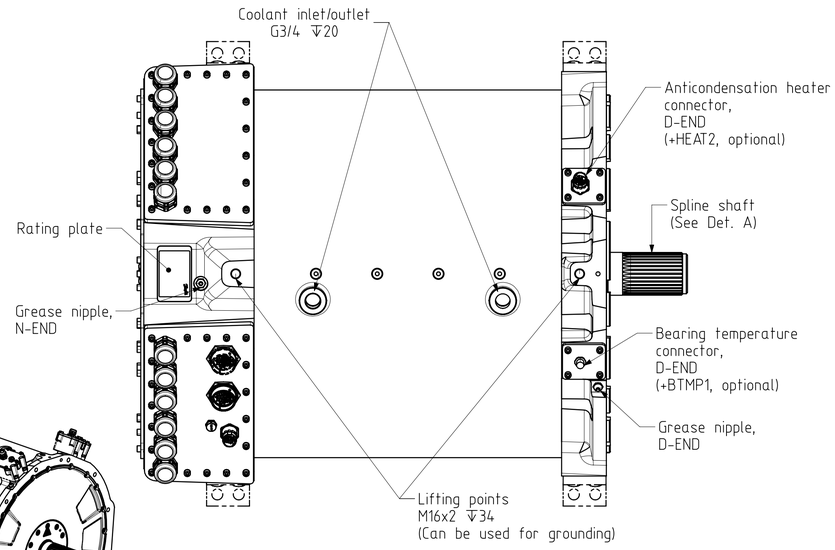

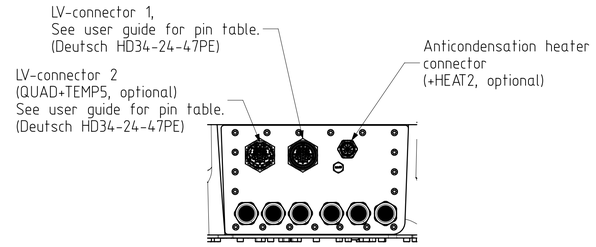

SECTION B-B
Low voltage connectors, N-END

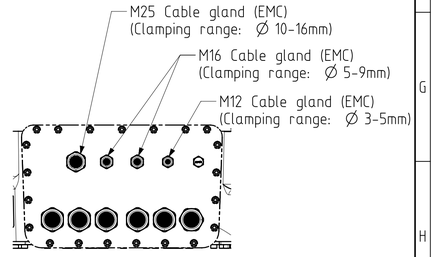

SECTION C-C
Low voltage connections, N-END
(+LVB1, optional)

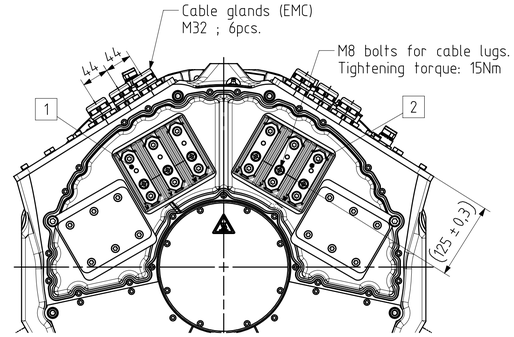

Terminal box, DUAL
DUAL winding systems 1-2 marked with squares □

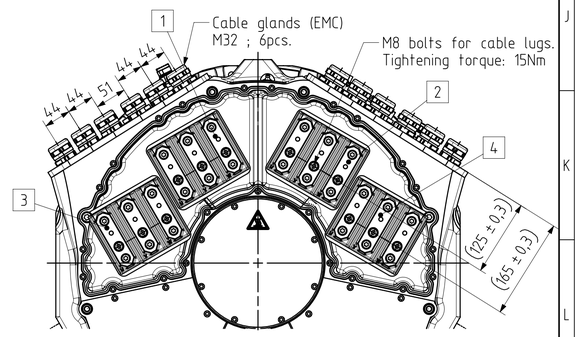

Terminal box, QUAD
DUAL winding systems 1-4 marked with squares □

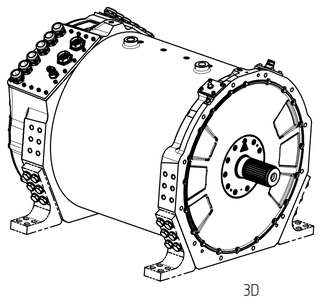

3D
SCALE 1:10

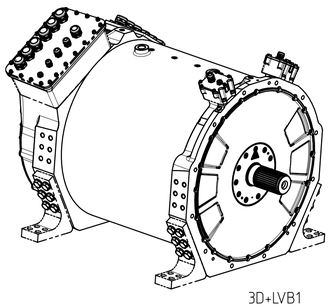

3D+LVB1
SCALE 1:10

Mass (±2%) (kg)	719.4
+FM1	+24kg
+LVB1	+6kg
Size	A1
Designer	PeVi

THE REPRODUCTION, DISTRIBUTION AND UTILIZATION OF THIS DOCUMENT AS WELL AS THE COMMUNICATION OF ITS CONTENTS TO OTHERS WITHOUT EXPLICIT AUTHORIZATION IS PROHIBITED. OFFENDERS WILL BE HELD LIABLE. FOR THE PAYMENT OF DAMAGES. ALL RIGHTS RESERVED IN THE EVENT OF THE GRANT OF A PATENT, UTILITY MODEL OR DESIGN. (PER ISO 16016)

CHANGE ID	REV	ITEMS	STATUS/DATE DD-MMM-YYYY	R&W MATERIAL SPECIFICATION
	01	x -	DAG_Approved 17-Feb-2025	

DRAWING INTERPRETATION PER S04H0074
DWG NO CDR00017591 REV 01 WAS
DRAWING TITLE
GENERAL MODEL.
EM-PMI540B-T3000+S3
SCALE 1:5
SHEET 1 OF 1
PART NO